FOCUSED ISSUE FEATURE

Gabriel M. Rebeiz, Kamran Entesari, Isak C. Reines, Sang-June Park, Mohammed A. El-Tanani, Alex Grichener, and Andrew R. Brown

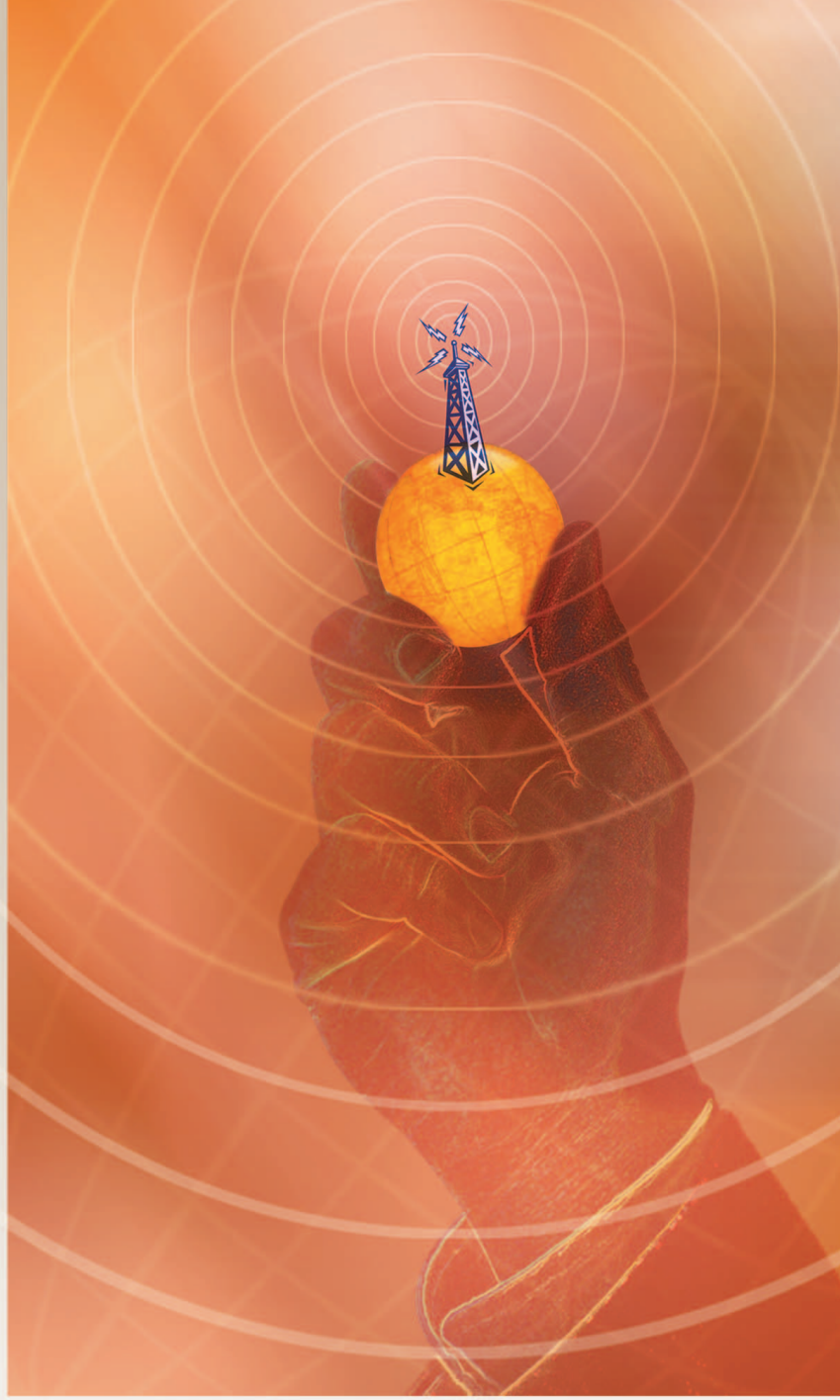

© EYEWIRE

Tuning in to RF MEMS

Radio frequency (RF) microelectromechanical systems (MEMS) switches and varactors, developed in 1996–2002 for low-loss switching/routing circuits and X-band (8–12 GHz) to millimeter-wave (mm-wave) (30–120 GHz) phase shifters, have seen increasing applications in tunable filters, tunable antennas, and reconfigurable matching networks. RF MEMS devices are well covered in [1] and [2] and consist of four different designs (Figure 1):

1) *Metal-contact switches* with excellent performance from dc to 100 GHz (see Radant MEMS [3]).

Gabriel M. Rebeiz (rebeiz@ece.ucsd.edu), Isak C. Reines, Mohammed A. El-Tanani, and Alex Grichener, The University of California, San Diego La Jolla, California 92037, Kamran Entesari, Texas A&M University College Station, TX 77843, Sang-June Park, Qualcomm Inc. San Diego, California 92121, and Andrew R. Brown, A. Brown Design Northville, MI 48167.

Digital Object Identifier 10.1109/MMM.2009.933592

Authorized licensed use limited to: US Naval Academy. Downloaded on November 2, 2009 at 14:08 from IEEE Xplore. Restrictions apply.

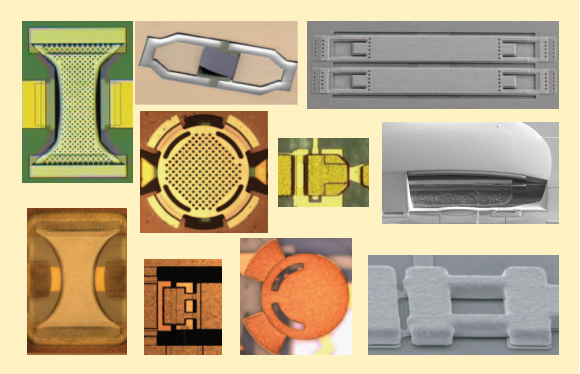

Figure 1. *Photographs of RF MEMS devices (composite photo of ten different devices).*

2) *Capacitive switches* with a capacitance ratio of 20–150:1 are mostly used as On/Off switches and with excellent performance from 2 GHz to greater than 100 GHz. See Raytheon [4] and the Massachusetts Institute of Technology (MIT)-Lincoln Laboratories (LL) [5].
3) *Switched capacitors* with an On/Off capacitance ratio of 4–10:1, which are ideal as tuning devices from 500 MHz to greater than 100 GHz [see University of California at San Diego (UCSD) [6]–[8] and University of Limoges [9]).
4) *Analog varactors* with a continuous tuning range of 1.5–8:1, which are also used as tuning devices from 500 MHz to greater than 100 GHz (see Rockwell Scientific [10], MIT-LL [11] or the piezoelectric (PZT) [12] varactors).

Great advances in SiGe and complementary metal-oxide-semiconductor (CMOS) technologies for RF to mm-wave applications, have led to high-performance amplifiers and low-cost silicon-based phase-shifters up to 100 GHz [13]–[17]. Also, dc-3 GHz Gallium Arsenide (GaAs) high-electron mobility transistor (HEMT) and Silicon-on-Insulator (SOI) CMOS switches command US$0.02 per switch throw for mobile phone switching circuits. It is, therefore, clear that RF MEMS can only shine in the near future in areas that cannot be implemented using silicon (or GaAs) solutions and where the RF MEMS device plays an essential role (see "The Search for the Ideal Tuning Device" and "Linearity of RF MEMS Devices").

Making a Difference with RF MEMS

A look at a cell phone front-end with multiple GSM, code division multiple access (CDMA), and data-channels covering 800 MHz to 2,400 MHz, shows that a single silicon transceiver chip requires 16 different fixed filters or diplexers (Figure 2). These are implemented using fixed surface acoustic wave (SAW) and bulk acoustic wave (BAW) filters and an RF distribution network. In fact, the passive part of a multiband cell phone or a defense radio occupies 65–80% of the RF board area, depending on the number of channels, with an RF loss of 3–6 dB between the silicon chip and the antenna(s) [18], [19]. It is therefore imperative to combine several of these filters into single units using tunable filters and antennas (Figure 3). Reconfigurable impedance matching networks can also be placed between the power amplifiers and the antenna. This not only tunes the time-varying antenna impedance, but also allows one or two GaAs amplifiers to cover all the required frequencies [20]–[24]. RF MEMS, with their small size, simple circuit model and zero power consumption makes it possible to build complicated tuning networks inside high-Q resonators, matching networks, or antennas without loss of performance.

A revisit of [1] and [2] leads to several known strengths for RF MEMS:

1) Extremely low loss ($<0.1-0.2$ dB), low on-resistance ($0.5-2\ \Omega$ for metal-contact devices, $0.1-0.2\ \Omega$ for capacitive devices), low off-state capacitance (2–16 fF), very high isolation up to mm-wave frequencies, and near zero-power consumption for electrostatic and PZT-based switches and varactors.
2) Very high linearity: For identical input powers, RF MEMS are 20–50 dB better than GaAs or CMOS devices, especially when compared to varactors.
3) Very high Q: A device resistance of $0.1-2\ \Omega$ results in a Q greater than 50–400 at 2–100 GHz. This is essential for tunable filters and reconfigurable networks.
4) Can be designed to handle large RF voltage swings ($>30-50\ V_{\mathrm{rms}}$), or better yet, can be designed to be a three or four-terminal device where the RF terminals are independent from the dc actuation pads [3], [5].
5) High power handling of 1–10 Watts for both capacitive and metal-contact switches and varactors (with proper design) [5], [25].

On the other side, RF MEMS also has some concerns, and they are:

1) Hermetic packaging: All reliable RF MEMS switches require a hermetic package which tends to increase cost. A hermetic wafer-cap is been developed by several companies and labs which will greatly reduce the packaging cost [26].
2) High voltage drive: Most reliable RF MEMS switches operate at 25–90 V, and therefore require high-voltage drive circuits.
3) Reliability: Research on reliability is a very high priority, and better dielectrics, metal-contacts, actuator design and packaging are all contributing to vastly improved reliability results (see "Linearity of RF MEMS Devices").

Figure 4 presents the insertion loss for 5% bandwidth filter with 2 and 3 poles. It is evident that a Q

Authorized licensed use limited to: US Naval Academy. Downloaded on November 2, 2009 at 14:08 from IEEE Xplore. Restrictions apply.

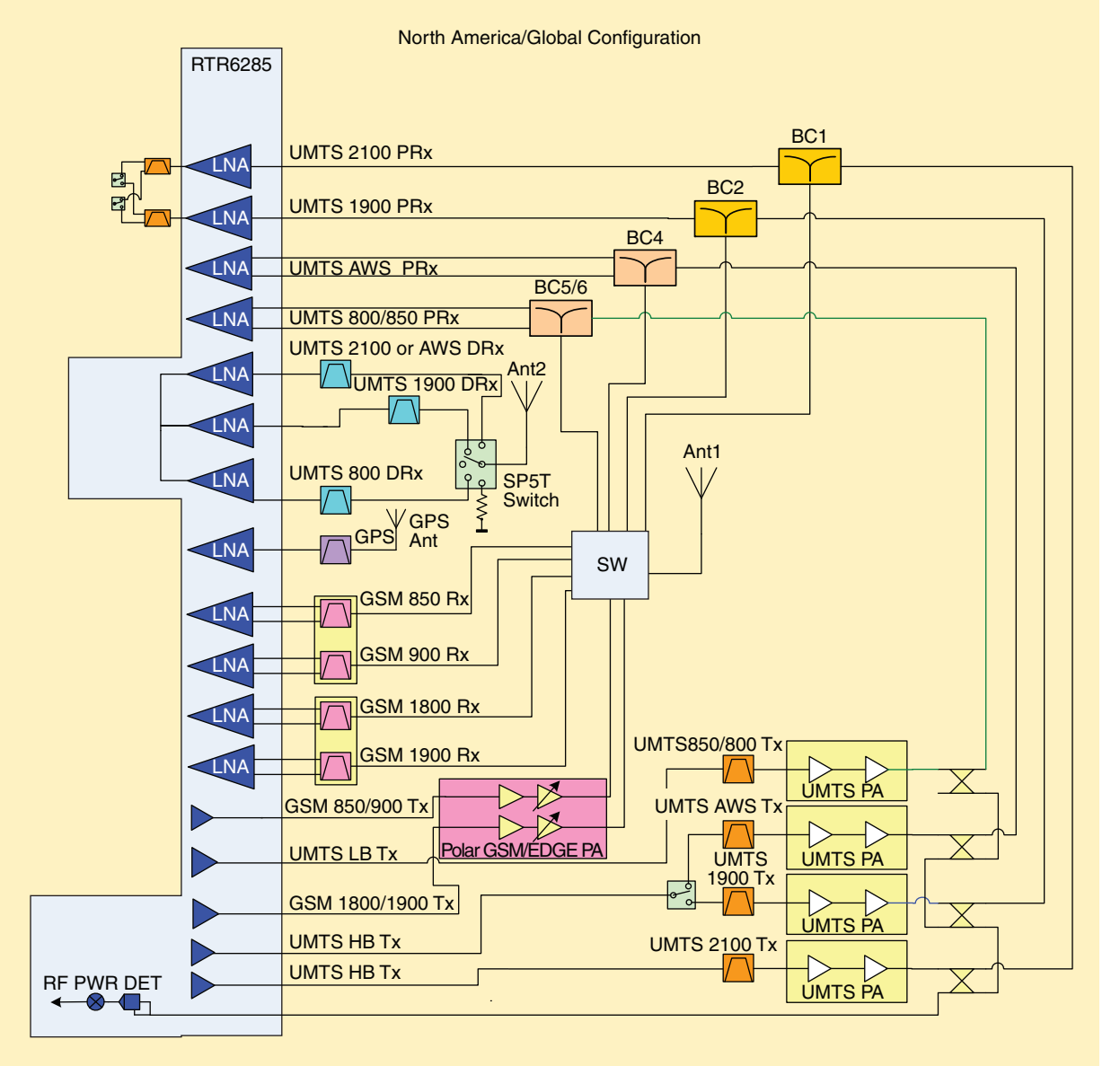

Figure 2. *A modern cell phone with four GSM bands, four UMTS bands, three diversity UMTS bands, and a GPS band for the North American market. Note the number of filters used. The UMTS frequencies are different for the United States, Japan, Europe, Latin America, etc. making a world-wide phone even more challenging [18].*

of ~200 is required in order to obtain low-loss performance, and as it will be seen later, maintaining such a Q is challenging in a tunable environment. Note that a capacitance ratio of less than 4.0 is required for applications with $f_{max}/f_{min} = 2{:}1$. This means that for tunable filters, it is more important to design a MEMS capacitance network with analog tuning or fine digital tuning rather than one with a capacitance ratio of 50:1. An N-bits switched capacitor network can be synthesized using metal-contact or capacitive switches in series with fixed capacitors (Figure 5). These networks typically employ the same MEMS switch but with different fixed capacitor values to result in very fine capacitance steps. As a comparison, for tunable matching networks with a VSWR of 5–8, the required capacitance ratio is 6–10:1 [1]. In this case, it is not the frequency tuning which is important, but the impedance match under high VSWR conditions and this requires a larger capacitance ratio than an octave-tuned filter.

Knowing all of the above, it is evident that RF MEMS devices have applications *now* in three main areas:

1) *Tunable Filters and Reconfigurable Networks*: RF MEMS result in a very high device Q when compared to other planar devices, high linearity, and large RF voltage swings, and this makes them ideal for tunable filters, reconfigurable matching networks and multiple-frequency antennas.
2) *Relays and Relay Networks [NxM, single-pole double-throw (SPDT), single-pole N-throw (SPNT), etc.]*: RF MEMS switches offer a very low-loss and high

Authorized licensed use limited to: US Naval Academy. Downloaded on November 2, 2009 at 14:08 from IEEE Xplore. Restrictions apply.

The Search for the Ideal Tuning Device

We are in the 21st century and we still do not have a good electronic tuning device. Sure, we have the Schottky diode, but it cannot handle a lot of power, and it generates a lot of distortion. We have the p-i-n diode, but it needs to be biased to 20–30 mA for good linearity and therefore consumes a lot of power. We have the yttrium-iron-garnite (YIG) tuner with a very high Q and reasonably low distortion characteristics. All of our tunable filters in spectrum analyzers and defense systems are based on this technology, but it consumes a lot of current (0.3–3A), requires a magnet, is relatively heavy, cannot be integrated in a planar fashion, and needs to be kept at a constant temperature. YIG-based filters are therefore not suitable for low-cost portable solutions. Recently, the research community have spent a lot of effort on perfecting planar ferroelectric varactors [34], [36], but these still have a relatively low Q (50–100 at 1–10 GHz), are temperature sensitive, and can create distortion in high-Q tunable filters. In fact, we are still searching for the ideal electronic tuner, nearly 100 years after the invention of radio!

What makes a good tuner? A tuner is a variable capacitive device (analog varactor, a switched capacitor, a low-loss switch followed by a fixed capacitor) with low series resistance (high-Q), zero power consumption, large power handling (watt level), very high linearity, and fast switching speeds (μs). It is small and lightweight, temperature insensitive, and can be integrated in a planar fashion and with a simple and accurate equivalent circuit model. RF MEMS allows us to build such a device [1], and can satisfy every single one of these conditions, and it is for this reason that we are doing research in this area (Table S1).

TABLE S1. Comparison of different tuning technologies.

	YIG	BST	Schottky Diode	p-i-n Diode	MEMS
Q	500–2,000	30–150	30–150	$R_s = 1\ \Omega$	50–400[a]
Tuning Range	2–18 GHz	$C_r = 2$–3	$C_r = 3$–5	High	$C_r = 2$–100[c]
Tuning Speed	ms	ns	ns	ns	μs[d]
Linearity, IIP3 (dBm)[e]	≈20	10–35[b]	10–35[b]	>33	>60
Power Handling (mW)[e]	50–200	20–200	10–100	High	100–1,000
Power Consumption	0.5–5 W	0	0	20–30 mA	0
Temperature Sensitivity	High	High	Low	Low	Low
Biasing	Magnet	High R	High R	LC choke	High R
Planar	No	Yes	Yes	Yes	Yes
Cost	High	Low	Low	Low	Low[f]

- PIN diode used as a switched capacitor tuner ($R_s = 1\ \Omega$), 20–30 mA/diode.
- Q values given for 0.1–10 GHz applications for all devices except MEMS.
- Linearity and power handling for band-pass filter: two-pole, 3–5% bandwidth.

a) Q applicable for 0.1–100 GHz.
b) Large values can obtained as 1 × 3 arrays or anti-series diode pairs.
c) MEMS used an analog varactor or switched capacitor.
d) Miniature MEMS can be switched at 200–800 ns.
e) Power handling and linearity are in tunable networks (filters) and not in 50 Ω environments.
f) Potential for low cost in high volume applications.

isolation performance which is competitive with coaxial relays, at a fraction of the weight, volume and cost. Also, most coaxial relays are rated between 10 M and 500 M cycles, while RF MEMS switches are rated to billions of cycles, even at 10 W for the new designs. Large NxM networks can be fabricated at a fraction of the cost, volume and weight of coaxial switches [27]–[29].

3) *Wideband True-Time Delay Networks for Phased Arrays*: The low loss and high isolation properties of RF MEMS metal-contact switches, or the near ideal properties of RF MEMS varactors or switched capacitors, makes it easy to build wideband nondispersive 1–18 GHz true-time delay networks for phased arrays [30]–[32]. These circuits are not to be confused with phase shifters which are now dominated by silicon CMOS and SiGe up to 100 GHz [13]–[15].

Tunable Filter Simulations with RF MEMS, Ferroelectric Varactors, and GaAs Diodes

Figure 6 shows the schematic of a two-pole 3% Chebyshev tunable filter with a center frequency of 1.95 GHz. The inductors have a resistance of 0.15 Ω resulting in a Q = 200 at 1.95 GHz and a filter insertion loss of

Authorized licensed use limited to: US Naval Academy. Downloaded on November 2, 2009 at 14:08 from IEEE Xplore. Restrictions apply.

Linearity of RF MEMS Devices

RF MEMS metal-contact and capacitive devices are extremely linear, even if used in an analog mode, due to different mechanisms as explained below For metal-contact switches, there is virtually no nonlinearity in a good ohmic contact. The IIP_3 of several metal-contact RF MEMS switches was measured by several companies and labs and is greater than +66 dBm (limited mostly by the measurement apparatus).

RF MEMS capacitive switches, on the other hand, can react to the RF voltage waveform in a peculiar way and this is due to the V^2 law in the electrostatic force, where V is the RF voltage across the device [1]. In a multitone signal at f_1 and f_2, the V^2 law produces a force which is proportional to the difference frequency, f_1-f_2, and this will modulate the RF MEMS device in a sinusoidal manner [S1], [S2]. The f_1-f_2 component, in turn, modulates the device capacitance and creates distortion sidebands. However, if f_1-f_2 is larger than the RF MEMS device mechanical resonant frequency (f_o, 20–200 kHz for most designs), then the device will not move even if the difference amplitude is large—that is, the device is simply not fast enough to follow the applied force after f_o, and therefore, no distortion is created. This is in contrast to Schottky-diodes and ferroelectric varactors where the electrons or the ferroelectric domains have a response time of subnanosecond and can react instantly to the RF waveform. In capacitive tuners, the real-time capacitance of the Schottky-diode and BST varactor varies with the RF voltage and will create immense distortion for large voltage swings (3–20 V). As is well known, large voltage swings (>5 V) can be present in tunable filters and matching networks even at 100 mW of RF input power.

The CAD-based model of a nonlinear MEMS capacitor is shown in Figure S1 [S1]. This model is composed of three blocks: A) electrostatic force generation, B) the mechanical bridge, and C) the variable-gap parallel plate capacitor. This model is used in Agilent-ADS for harmonic balance analysis.

References

[S1] L. Dussopt and G. M. Rebeiz, "Intermodulation distortion and power handling in RF MEMS switches, varactors and tunable filters," *IEEE Trans. Microwave Theory Tech.*, vol. 51, no. 4, pp. 1247–1256, Apr. 2003.

[S2] G. M. Rebeiz, "Phase noise analysis of MEMS-based circuits and phase shifters," *IEEE Trans. Microwave Theory Tech.*, vol. 50, no. 5, pp. 1316–1323, May 2002.

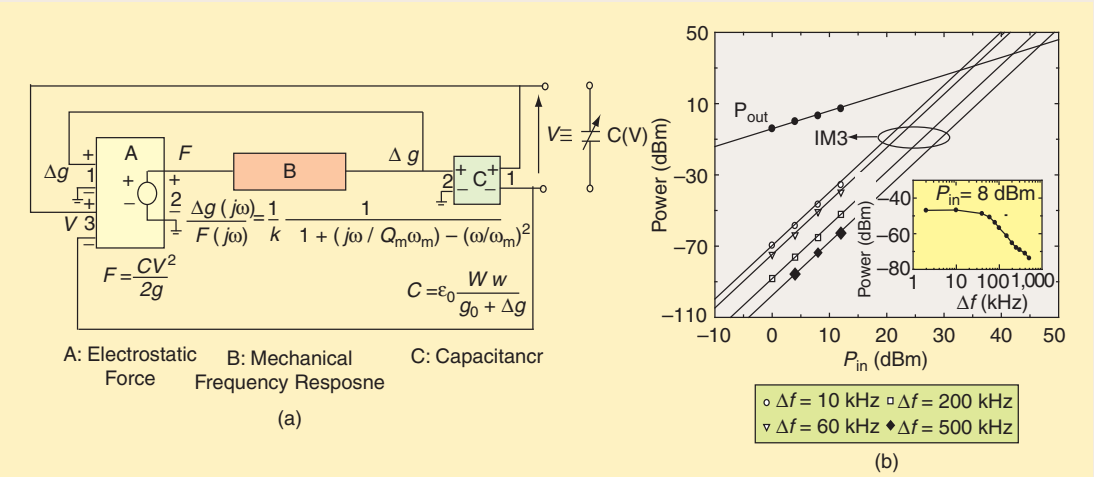

Figure S1. *(a) Nonlinear ADS model of an RF MEMS capacitor [S1]. (b) Measured IP3 and IM3 (inset) of an RF MEMS tunable filter. Notice how the IM3 drops as f^{-2} above the mechanical resonant frequency.*

1.5 dB in the pass-band (all tunable devices are assumed lossless for this analysis) [33]. By changing C_R from 1.7 to 3.1 pF and keeping C_M fixed, one can achieve a tuning range of 1.7 to 2.2 GHz. To implement the tunable filter, C_R is substituted by RF MEMS switched capacitors, ferroelectric, barium-strontium-titanate (BST) tuners [34]–[36] and GaAs Schottky-diode varactors, each with a C-V curve given in Figure 6. The RF MEMS is a 26 V device with the dc biasing electrode and the RF signal path sharing the same electrode, and this result in the worst case IIP_3 (third-order input intermodulation intercept point). If the dc biasing electrode is separated from the RF signal path, the RF MEMS switched capacitor shows even better linearity and higher IIP_3 compared to the standard design, but this is not considered here so as to have a fair comparison with the BST and GaAs devices [1].

The voltage swings across the RF MEMS, BST and GaAs varactors for a 1.95 GHz single-tone excitation using harmonic balance simulations are shown in Figure 7. For P_{in} = 20–30 dBm, V_a = 10−31 V_{pk} (V_{rms} = 7−22 V) for the RF MEMS switch, and this is equal to the ideal value from linear circuit analysis. The RF MEMS voltage is still lower than the pull-down voltage of the MEMS

Authorized licensed use limited to: US Naval Academy. Downloaded on November 2, 2009 at 14:08 from IEEE Xplore. Restrictions apply.

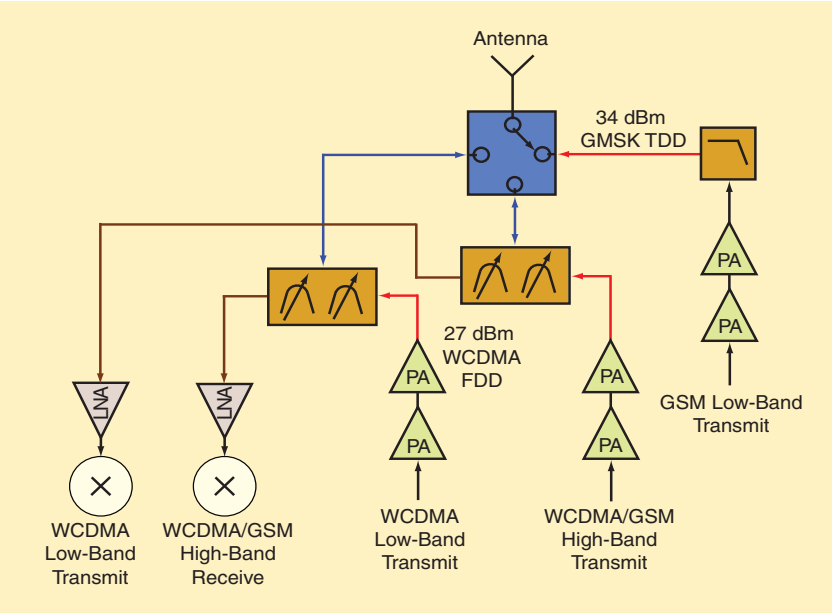

Figure 3. *The same transceiver of Figure 2 (without diversity) built using tunable filters. A dramatic reduction in the front-end components is possible if high-quality tunable diplexers and filters are achieved in the 800–2,200 MHz range [18].*

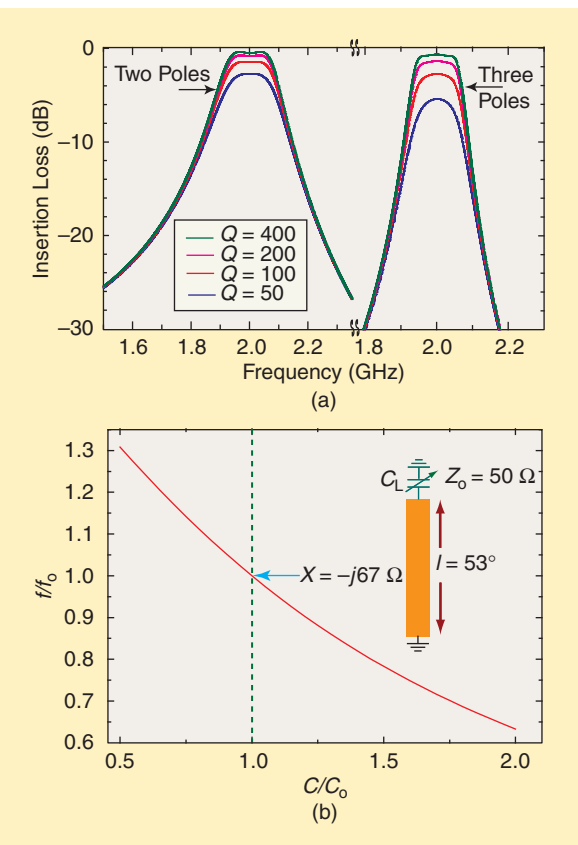

Figure 4. *(a) Response for two- and three-pole 5% bandwidth tunable filters. Note that a quality factor of 200 results in acceptable performance. (b) The simulated frequency range for a resonator with a loading capacitance. A $C_r < 4$ is required for a frequency tuning range of 2:1.*

switch, and, therefore, the switch remains in the up-state position and self-biasing does not occur (if $V_{rms} > V_{pull-down}$), then the RF voltage can pull down the switch even with no dc bias applied [1]. The voltage across the BST and GaAs varactors is distorted for $P_{in} = 20-30$ dBm since the signal experiences huge nonlinearities due to the large capacitance variation of the BST and turn-on of the GaAs varactors.

To improve the power handling and linearity of the BST tunable filter, each BST varactor is substituted by a 3×1 or a 3×3 array of BST varactors. As expected, the tunable filter's IIP_3 level increases from +23 dBm for 1×1 BST topology to +33 dBm for the 3×1 and 3×3 BST topologies. The simulated IIP_3 is greater than +60 dBm for the RF MEMS tunable filter at 1 MHz offset. The single-tone source is now substituted with a wideband CDMA (WCDMA) source at 1.95 GHz and the circuit is simulated in Agilent-ADS. For $P_{in} = +30$ dBm, the RF MEMS filter remains in the linear region while the BST tunable filters show significant spectral regrowth (Figure 7). The output CDMA spectrum of the GaAs-based tunable filter is not shown because the filter response is totally distorted at this power level.

This simple example shows the main advantage of RF MEMS in tunable filters. It is evident that the RF MEMS device can handle large voltage swings (even with the use of a common dc/RF electrode) and results in very low distortion. It is important to note that while the IIP_3 of the 1×3 and 3×3 BST tunable filters is quite high (+33 dBm), they still result in significant spectral regrowth with CDMA signals at +25–30 dBm. Similar analysis done in [33] on impedance matching networks show less distortion from BST networks due to the lower loaded Q (and voltage swings) in these networks as compared to tunable filters.

RF MEMS Tunable Band-Pass Filters: A Library

This section presents a comprehensive overview of tunable filters developed using RF MEMS in ascending frequencies. Only the best filters are presented with selection criteria of: 1) wide and nearly continuous frequency coverage with many measured states, 2) high-Q and low insertion-loss, and 3) good to excellent frequency response. Tunable filters based on CMOS on-chip inductors and capacitors are not presented here due to their low Q, wide bandwidth and relatively poor frequency response.

Authorized licensed use limited to: US Naval Academy. Downloaded on November 2, 2009 at 14:08 from IEEE Xplore. Restrictions apply.

Filters with Q less than 30, a small fractional tuning range, large gaps in their frequency response and high input reflection coefficient ($S_{11} > -10$ dB) are not reported. Switched filter banks, which employ single-pole-multiple-throw switches and fixed filters, are also not reported.

RF MEMS switches and varactors were first developed for low-loss switching circuits and phase shifters, but are now essential for tunable filters.

25–75 MHz Two-Pole Tunable Filter Using Metal-Contact Switches

Entesari et al. at the University of Michigan developed a 4-bits two-pole tunable filter based on switched capacitors using metal-contact switches and fixed-value capacitors [37] (Figure 8). The lumped inductors are air-coil type with Q of 114 at 50 MHz. The Radant-MEMS switches have 8-contact points with an up-state capacitance of 80 fF and a down-state resistance of 0.7−1 Ω, and are bonded on the FR-4 filter substrate. The measured insertion loss is 3–5 dB at 25–75 MHz with a relative bandwidth of 4.2+/−0.5%. A resonator Q of 52–75 was measured over all tuning states. The measured tunable filter IIP_3 is greater than +65 dBm. A very accurate switch model must be used in filter design so as to get good agreement between simulations and measurements [37]. Another low-frequency filter was also demonstrated at 30–90 MHz using metal-contact switches but is not shown here since these switches were thermally driven and are not available anymore [38].

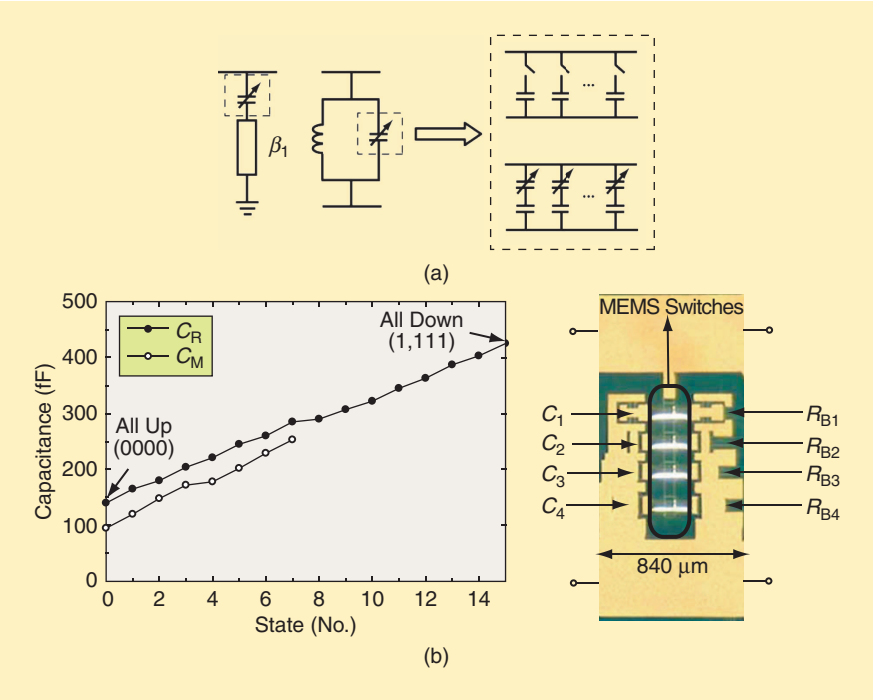

Figure 5. *(a) A switched filter bank implemented using metal-contact or capacitive switches. (b) The measured capacitance value for a 3- and 4-bits RF MEMS switched capacitors. A picture of the 4-bits device is also shown [37].*

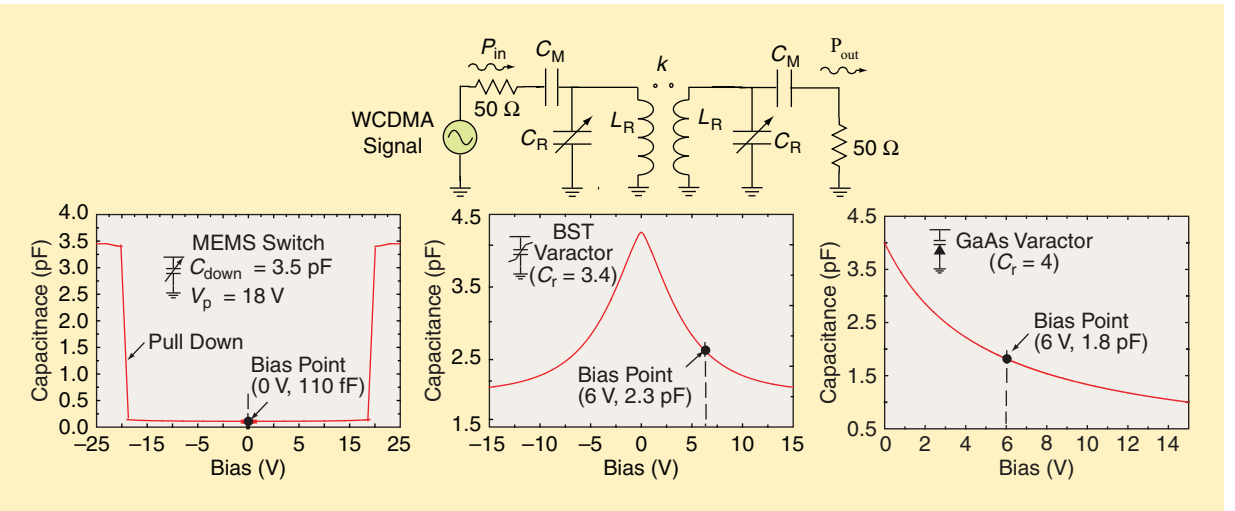

Figure 6. *A two-pole tunable filter with 3% bandwidth and the different tuning devices: RF MEMS, barium-strontium-titanate, and GaAs varactors. The response is similar to that of (Figure 4) but scans from 1.7 to 2.2 GHz (Q = 200). The different bias points are shown for 1.95 GHz [33]. Note that the barium-strontium-titanate and GaAs varactors are analog, while the MEMS is a switched-capacitor design.*

Authorized licensed use limited to: US Naval Academy. Downloaded on November 2, 2009 at 14:08 from IEEE Xplore. Restrictions apply.

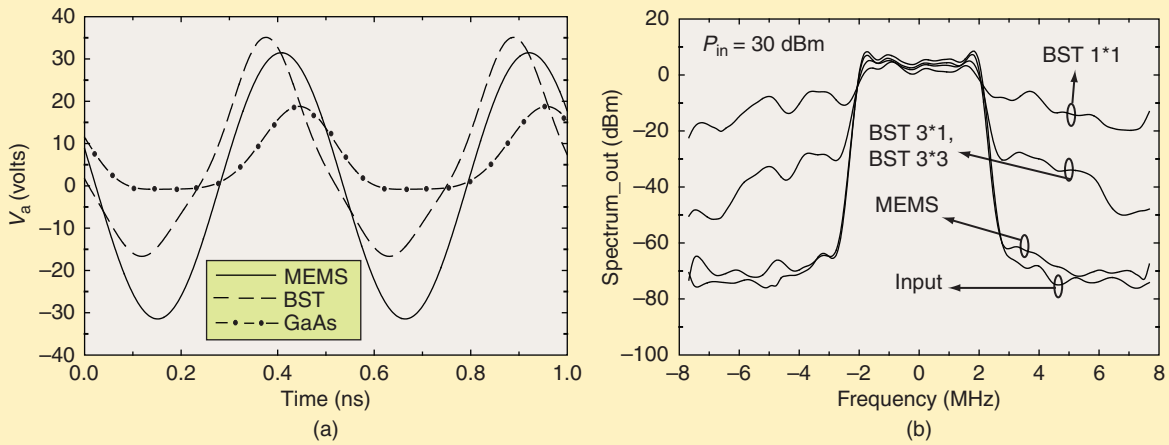

P_{in} (dBm)	RF MEMS	BST[1]	GaAs
10	±3.2	±2.4	±2.4
20	±10.0	–0.4 to 15[2]	–0.4 to 15[2]
30	±31.0	–17 to 36[2]	–0.7 to 19[3]

[1] Across a 1 × 1 BST device. Voltage is 3 × smaller across a 1 × 3 device.

[2] Distorted

[3] GaAs design cannot handle > 22 dBm due to diode turn on.

Figure 7. *(a) Simulated waveforms across the RF MEMS switch, barium-strontium-titanate and GaAs varactors for +30 dBm, and (b) the associated code division multiple access spectral regrowth. The voltage levels are shown in the table.*

110–160 MHz and 220–400 MHz Two-Pole Tunable Filters Using Metal Contact Switches and Interdigital Capacitors

Rockwell Collins at Rockwell Scientific developed two-pole tunable filters using MEMS switched capacitors at 110–160 MHz and using MEMS interdigital varactors at 220–400 MHz [10] (Figure 9). The switches and varactors were developed by Rockwell Scientific. The 110- to 160-MHz filter uses two 8-bits capacitors for precise frequency control. The measured insertion loss is 4–5 dB over the tuning range (limited by inductor Q and switch resistance), with a 1-dB bandwidth of 3.5% and an IIP_3 of greater than +55 dBm (Q~50). A two-pole design was also fabricated at 220–400 MHz with MEMS interdigital varactors. The varactors have a capacitance range of 8.4:1 and a Q greater than 150 at 300 MHz. The MEMS varactors replace 16 silicon varactor diodes due to their capability to withstand large voltage and current swings. The measured filter loss was around 5 dB for a 1-dB filter bandwidth of 2.5% Q~60.

100–160 MHz and 806–950 MHz Tunable Filters Using Switched Capacitance Banks

The Raytheon group was the first to demonstrate high-performance RF MEMS tunable filters using 4-bits switched capacitance banks [39] (Figure 10). Two notable

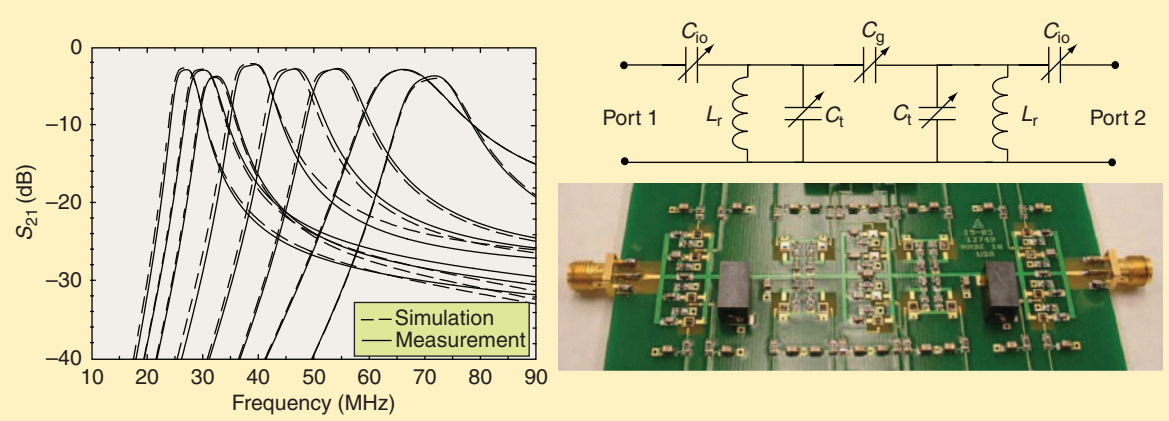

Figure 8. *A 25–75 MHz 4-bits 4.2% tunable filter built using the Radant-MEMS switches and a switched-capacitor bank [37]. The measured IIP3 was >68 dBm.*

Authorized licensed use limited to: US Naval Academy. Downloaded on November 2, 2009 at 14:08 from IEEE Xplore. Restrictions apply.

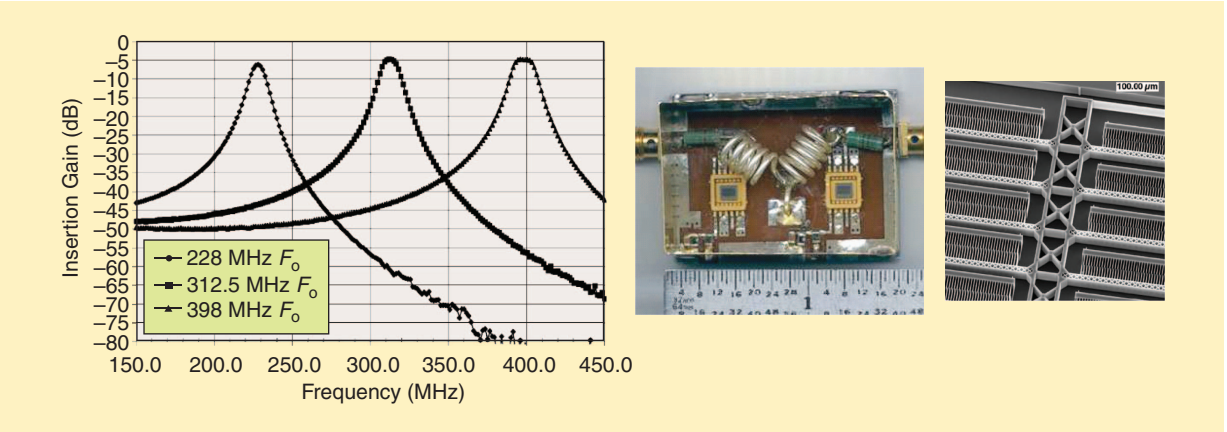

Figure 9. *A two-pole 220-400 MHz 4.2% tunable filter built using interdigital analog RF MEMS varactors [10]. Each RF MEMS varactor replaces 16 Schottky-diodes and results in a higher linearity.*

filters are the six-pole 110–160 MHz design with 50 MHz bandwidth and 4 MHz steps, and the five-pole 806–950 MHz design with 165 MHz bandwidth and 8 MHz steps. The 110–160 MHz filter employed off-chip inductors, while the 806–950 MHz filter used shorted stubs for the inductors on a high-resistivity silicon substrate. The measured insertion loss was 3–5 dB and 6–7 dB, respectively, for the 110–160 MHz and the 806–950 MHz designs. The tunable Q is estimated to be around 30. What is impressive about these designs is the large number of RF MEMS switches used for each filter (44–48 for each design). Designs such as seen have been demonstrated to 3 GHz.

850–1,750 MHz Two-Pole Tunable Filter Using Switched Capacitance Banks

Young et al. at Northrop Grumman developed a high-Q two-pole tunable bandpass filter using a switched capacitance bank composed of 1, 2, and 4 MEMS capacitive switches in a 3-bits binary approach on a ceramic substrate [40] (Figure 11). In this design, both the resonator and the inverter capacitances were implemented as RF MEMS capacitive banks. The inductors were off-chip air-coil type with Q greater than 100 at 1.3 GHz, and were assembled next to the RF MEMS chip. The measured performance shows state-of-the-art response, both for frequency (900–1,600 MHz center frequency) and bandwidth tuning (7–42% bandwidth), and with low insertion loss for medium bandwidth settings (1 dB loss for 15% bandwidth). The measured IIP_3 was greater than 30 dBm. This is a wonderful tunable filter and the estimated filter tunable Q is 60–90.

1,500–2,500 MHz Two-Pole Tunable Filters with Constant Absolute Bandwidth

El-Tanani et al. at UCSD developed high performance tunable filters with constant absolute bandwidth for wireless applications [41]. The filter design is based on corrugated coupled-lines and is fabricated on ceramic substrates $(\varepsilon_r = 9.9)$ for miniaturization (Figure 12). The 3-bits tuning network is fabricated using a digital/analog RF MEMS device so as to provide a large capacitance ratio and continuous frequency coverage. Narrowband $(72+/-3\text{MHz})$ and wideband $(115+/-10\text{ MHz})$ two-pole filters result in a measured insertion loss of 1.9–2.2 dB at 1.5–2.5 GHz with a power handling of 25 dBm and an IIP_3 greater than 35 dBm. The filters also showed no distortion when tested under wideband CDMA waveforms up to 25 dBm. At this power, the RF voltage generated across the RF MEMS varactors are $16-20\ V_{rms}$. A tunable filter Q of 85–165 was achieved which is the highest reported at this frequency range. In the future, these designs can be scaled to higher dielectric-constant substrates to result in even smaller filters.

1,600–2,400 MHz Three-Pole Tunable Filter Using Switched Capacitors

Reines et al. at UCSD developed the first suspended three-pole high-Q tunable combline filter RF MEMS

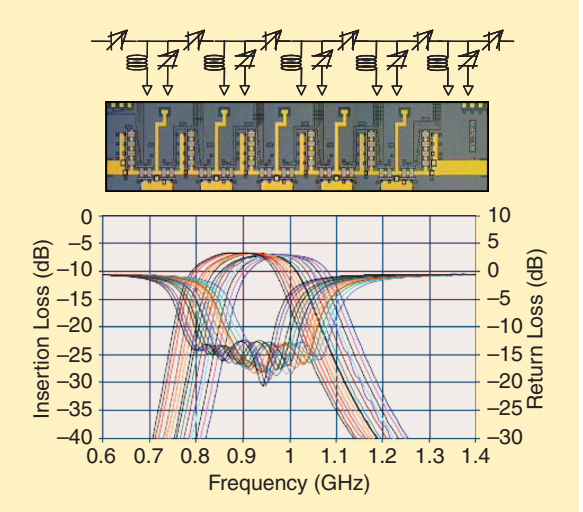

Figure 10. *A five-pole 806–950 MHz tunable filter built using the Raytheon RF MEMS switches and a switched-capacitor bank [39]. Note the fine resolution tuning (8 MHz). 44 RF MEMS switches are used.*

Authorized licensed use limited to: US Naval Academy. Downloaded on November 2, 2009 at 14:08 from IEEE Xplore. Restrictions apply.

Reliability of RF MEMS

No article on RF MEMS would be complete without a short discussion on reliability. In the author's opinion, there are three extremely reliable switches which have been built by the thousands with hundreds of devices tested to more than 100 billion cycles, after 12 years of research and funding. They are the Radant-MEMS metal contact switch and the MIT-LL and the Raytheon capacitive switches. The MIT-LL switch is currently being built by Innovative Micro Technology (IMT) and will soon be available for general use. Other companies and labs have also excellent devices, but further testing is needed on them. Tables S2 and S3 summarize the recent reliability results as of June 2009. See [S12] and [S13] for other recent reliability testing information.

References

[S3] H. S. Newman, J. L. Ebel, D. Judy, and J. Maciel, "Lifetime measurements on a high-reliability RF-MEMS contact switch," *IEEE Microwave Wireless Compon. Lett.*, vol. 18, no. 2, pp. 100–102, Feb. 2008.

[S4] J. Costa, T. Ivanov, J. Hammond, J. Gering, E. Glass, J. Jorgenson, D. Denning, D. Kerr, J. Reed, S. Crist, T. Mercier, S. Kim, and P. Gorisse, "An Integrated MEMS switch technology on SOI-CMOS," in *Proc. Solid State Sensors, Actuators, and Microsystems Workshop*, Hilton Head, June 2008, pp. 18–21.

[S5] D. Hyman, personal communication, 2009.

[S6] M. Fujii, I. Kimura, T. Satoh, and K. Imanaka, "RF MEMS switch with wafer level package utilizing frit glass bonding," in *Proc. European Microwave Conf.*, Oct. 2002, pp. 1–3.

[S7] J. Muldavin, C. Bozler, S. Rabe, P. Wyatt, and C. Keast, "Wafer-scale packaged radio frequency microelectromechanical switches," *IEEE Trans. Microwave Theory Tech.*, vol. 56, no. 2, pp. 522–529, Feb. 2008.

[S8] B. Pillans, J. Kleber, C. Goldsmith, and M. Eberly, "RF power handling of capacitive RF MEMS devices," in *IEEE MTT-S Int. Microwave Symp. Dig.*, Seattle, WA, June 2002, pp. 329–332.

[S9] C. L. Goldsmith, D. I. Forehand, Z. Peng, J. C. M. Hwang, and J. L. Ebel, "High-cycle life testing of RF MEMS switches," in *IEEE MTT-S Int. Microwave Symp. Dig.*, June 2007, pp. 1805–1808.

[S10] A. Morris, personal communication, 2009.

[S11] D. Mardivirin, D. Bouyge, A. Crunteanu, A. Pothier, and P. Blondy, "Study of residual charging in dielectric less capacitive MEMS switches," in *IEEE MTT-S Int. Microwave Symp. Dig.*, Atlanta, GA, June 2008, pp. 33–36.

[S12] C. Goldsmith, J. Maciel, and J. McKillop, "Demonstrating reliability," *IEEE Microwave Mag.*, vol. 7, no. 6, pp. 56–60, Dec. 2007.

[S13] J. L. Ebel, D. J. Hyman, and H. S. Newman, "RF MEMS testing beyond the S-parameters," *IEEE Microwave Mag.*, vol. 7, no. 6, pp. 76–88, Dec. 2007.

TABLE S2. Reliability summary of RF MEMS metal-contact switches.

	RADANT (Emperor)	RFMD	XCOM	OMRON
Actuator Type	Cantilever	Cantilever	Cantilever	Bridge
Actuator Material	Au	Au	Au	Silicon
Substrate	Silicon	SOI (on CMOS)	Silicon	Silicon
Actuation Voltage (V)	90	90	90	10–20
Unipolar/Bipolar Actuation	Unipolar	Unipolar	Unipolar	Unipolar
Switching Speed (μs)	10	5	30	300
Metal Contact R_{on} (Ohm), C_{off} (fF)	4, 25 (2-contact) 2, 50 (8-contact)	1, 15	1–2, 4	0.5, 5
Package Type	Hermetic Wafer Cap	Hermetic Dielectric Cap	Ceramic Hermetic Cap	Wafer Package, Glass Frit
Reliability (# of switches tested)	>200B[a] at 20 dBm (>100) >1,000B[a] at 20 dBm (6) >10B[a] at 30 dBm (>50) >100B[a] at 30 dBm (>5) >10B[a] at 40 dBm (>10) >200B[a] at 40 dBm (2)	100–1,000M at 10 dBm	100M at 1 mA	10M at 10 mA (>100)
Cycle Frequency (kHz)	20[b]	5	<1	0.5[b]
Reference	[S3]	[S4]	[S5]	[S6]

[a] All reliability tests stopped before switch failure
[b] All switching waveforms have ~50% duty cycle

Authorized licensed use limited to: US Naval Academy. Downloaded on November 2, 2009 at 14:08 from IEEE Xplore. Restrictions apply.

TABLE S3. Reliability summary of RF MEMS capacitive switches and switched-capacitors.

	MIT-LL (Emperor)	RAYTHEON (Emperor)	MEMtronics	WISPRY	UCSD	UCSD	LIMOGES
Actuator Type	Cantilever	Bridge	Bridge	Cantilever	Cantilever	Bridge	Cantilever
Actuator Material	Al	Al	Al	Al	Au	Au	Au
Substrate	Silicon	Silicon, Alumina, GaAs, Quartz	Quartz, Glass	Silicon (on CMOS)	Fused Silica	Fused Silica	Fused Silica
Actuation Voltage (V)	55–65	30–40	25–40	35 (3 V on-chip)	30–40	30–40	60
Unipolar/Bipolar	Alternating	Unipolar	Both	Unipolar	Unipolar	Bipolar	Unipolar
Switching Speed (μs)	20	5	10	<100	0.8[e], 50[f]	1	10–20
Capacitance Ratio	150:1	50:1	10:1–20:1	10:1–20:1	5–7:1	4–5:1	9:1
Package Type	Hermetic Wafer Cap	Hermetic Wafer Cap	Wafer Level Liquid	Thin-film Semihermetic Wafer Cap	Unpackaged[c]	Unpackaged[c]	Unpackaged[d]
Reliability[a, b] (# of switches tested)	>600 B at 0 dBm (6)	>200 B at 20 dBm (2) >150 B at 20 dBm (4) >100 B at 10 dBm (5)	>100 B at 20 dBm	N/A	2 B at 30 dBm (1)[e] 100 B at 30 dBm (1)[f]	>20 B at 20 dBm (5) >5 B at 27 dBm (5)	>1 B at 10 dBm (>5) >20 B at 10 dBm >2 B at 33 dBm
Cycle Frequency (kHz)	5	5	20–40	N/A	50[e], 15[f]	50	N/A
Reference	[S7]	[S8]	[S9]	[S10]	[6][e] [8][f]	[7]	[S11]

[a] All Tests stopped before switch failure
[b] All reliability tests done at 10–35 GHz when dBm is quoted
[c] Tests done in lab ambient environment
[d] Tests done in vacuum chamber backfilled with N2
[e] UCSD Mini-High Cr design
[f] UCSD High-Q design

Authorized licensed use limited to: US Naval Academy. Downloaded on November 2, 2009 at 14:08 from IEEE Xplore. Restrictions apply.

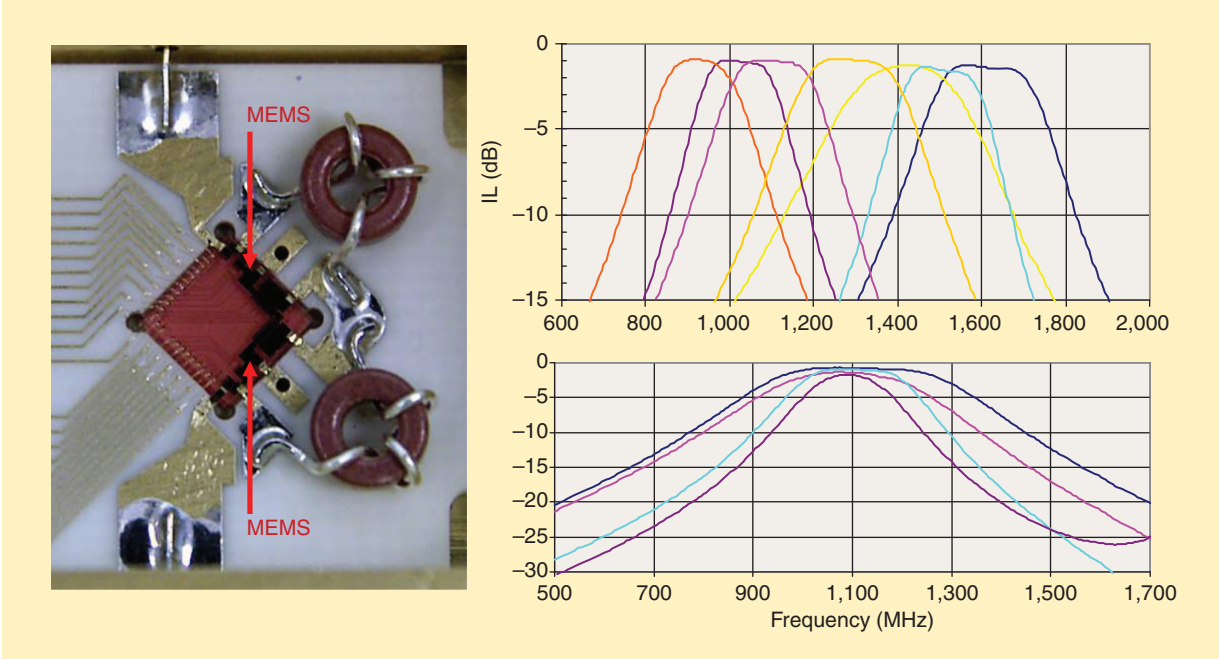

Figure 11. *A two-pole, 850–1,750 MHz tunable filter built using the Northrop Grumman RF MEMS switches and a switched-capacitor bank [40]. The filter can be controlled both in frequency and in bandwidth. A Q of 60–90 is achieved.*

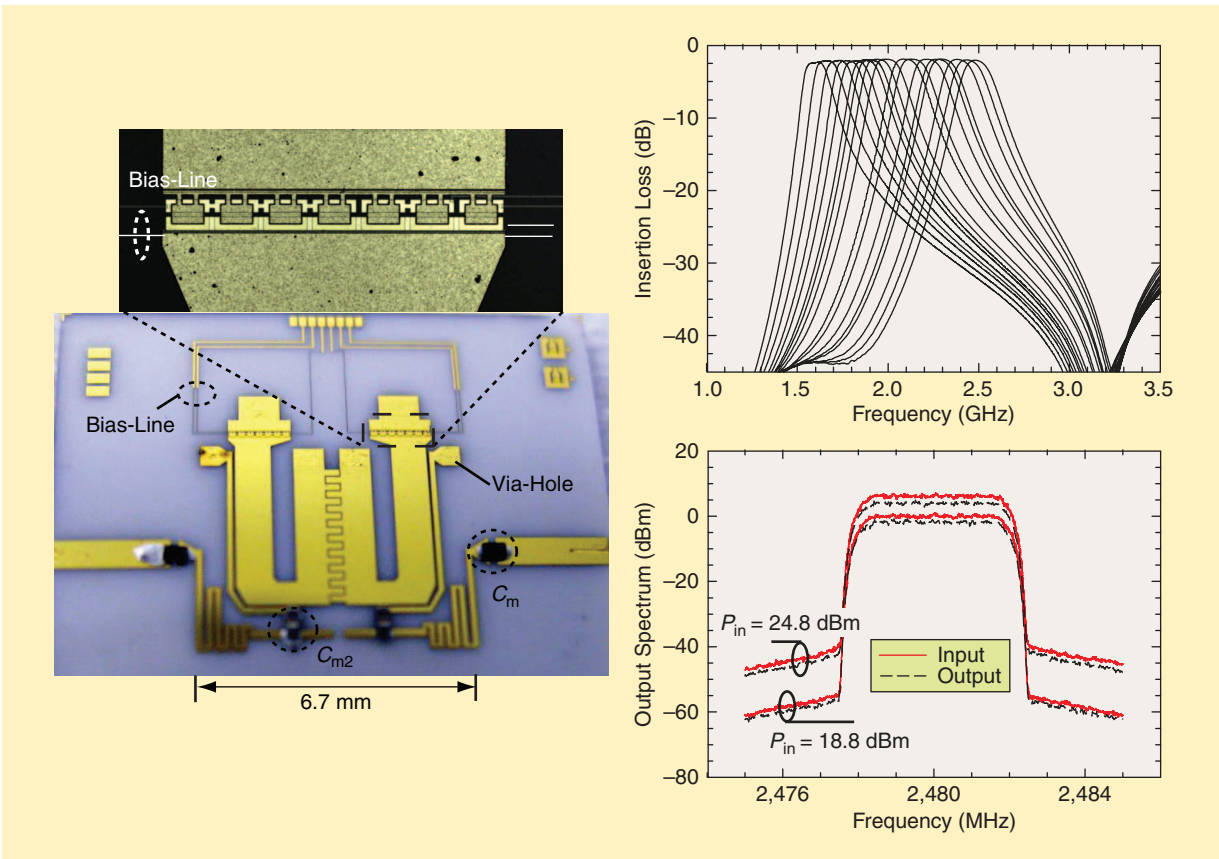

Figure 12. *A two-pole, two-zero, 115±10 MHz tunable filter covering 1,500–2,550 MHz for wireless applications. The insertion loss is ~2.0 dB [41]. The tunable Q is 85–125. 14 RF MEMS switched capacitors are used.*

Authorized licensed use limited to: US Naval Academy. Downloaded on November 2, 2009 at 14:08 from IEEE Xplore. Restrictions apply.

tunable filter with a frequency coverage of 1.6–2.4 GHz [42] (Figure 13). The suspended topology is chosen to result in a high-Q resonator, which is essential for a low-loss three-pole filter. Both the resonators and the input/output matching networks are tunable. The filter is built on a quartz substrate and results in an insertion loss of 1.34–3.03 dB over the tuning range and a 3-dB bandwidth of 201–279 MHz, and a tunable Q of 50–150 over the frequency range. With improved fabrication processes a filter Q of greater than 100 can be achieved across the tuning range.

RF MEMS devices can handle large voltage swings and result in very low distortion.

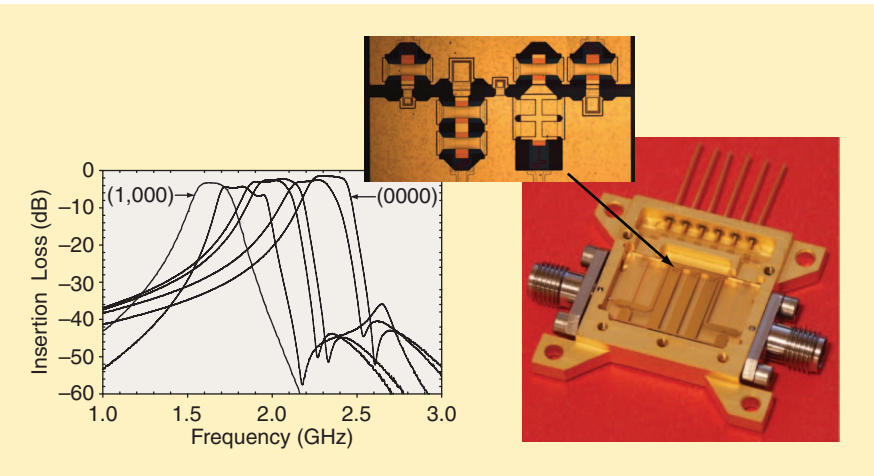

Figure 13. *A three-pole 1,600–2,400 MHz tunable filter built using UCSD RF MEMS capacitive switches (similar to Raytheon switches) and a switched-capacitor bank [42]. A Q of 50–150 is achieved. 19 RF MEMS capacitive switches are used.*

4,000–6,000 MHz Two-Pole Tunable Filter Using Switched Capacitors

Park et al. at UCSD developed a low loss 3-bits tunable filter using a high-Q 3-bits orthogonally-biased RF MEMS capacitance network [43] (Figure 14). The orthogonal biasing networks result in very low RF leakage through the bias lines, which ensures high-Q operation. The measured filter has an insertion loss of 1.5–2.8 dB with a 1-dB bandwidth of 4.35+/−0.35% over the 4–6 GHz tuning range. The measured IIP_3 and 1-dB power compression point at 5.91 GHz are greater than 40 dBm and +27.5 dBm, respectively. The tunable Q is 85–170 and can be improved to 125–210 with the use of a thicker bottom electrode for the RF MEMS capacitive switch.

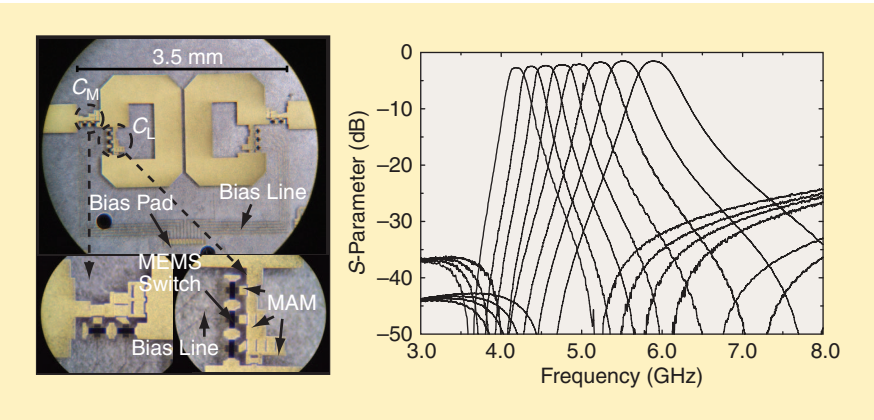

Figure 14. *A two-pole 4,000–6,000 MHz tunable filter built using UCSD RF MEMS capacitive switches (similar to Raytheon switches) and a switched-capacitor bank [43]. A tunable filter Q of 85–170 is achieved. 10 RF MEMS capacitive switches are used.*

6.5–10 GHz Three-Pole Tunable Filter Using Switched Capacitors

Kraus et al. at Sandia National Labs developed a three-pole 2-bits 6–10 GHz tunable end-coupled filter [44] (Figure 15). The tuning range was realized by switching distributed microstrip loading structures using RF MEMS capacitive switches on an alumina substrate. Both the

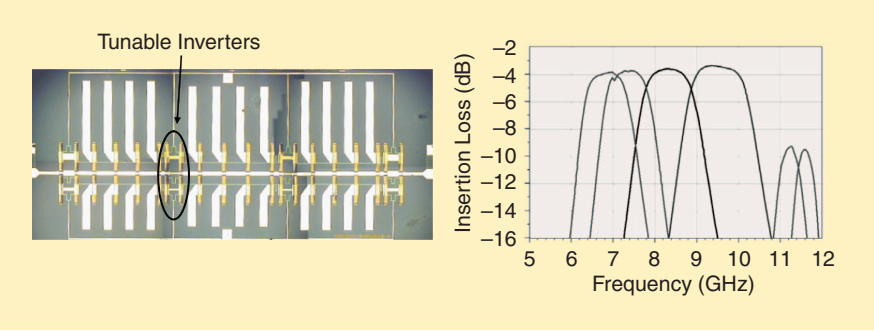

Figure 15. *A three-pole 6.5–10 GHz tunable filter built using Sandia National Labs capacitive switches (similar to Raytheon switches) and a switched-capacitor bank [44]. 40 RF MEMS switches are used.*

Authorized licensed use limited to: US Naval Academy. Downloaded on November 2, 2009 at 14:08 from IEEE Xplore. Restrictions apply.

The inherent *Q* limitations of planar filters is sufficient for applications such as tunable two- and three-pole filters with greater than 3–4% bandwidth.

coupling capacitors and tuning capacitors were controlled, and the filter achieved a constant fractional bandwidth of 15+/−0.3% and an insertion loss of 3.3–3.8 dB over the entire band. A tunable Q of ~50 was achieved and this could be improved using better processing (see [44]). Additional resonances are present when the filter is switched into the lowest two frequency states, and are due to the loading stubs used to realize these frequency states. A better design would be to replace the longest microstrip stubs with capacitors to ground.

6.5–10 GHz Differential Two-Pole Tunable Filter Using Switched Capacitors

Entesari et al. at the University of Michigan developed a wide-band miniature tunable filter for 6.5–10 GHz applications [45] (Figure 16). The 4-bits differential filter, fabricated on a glass substrate using digital capacitor banks and microstrip lines results in a bandwidth of 5.1+/−0.4% over the tuning range, and an insertion loss of 4.1–5.6 dB at 9.8 and 6.5 GHz, respectively, for a 1-kΩ/sq fabricated bias line. The measured tunable Q is 40–50 over the tuning range. Simulations show that, for a bias line sheet resistance of 10 kΩ/sq, the insertion loss improves to 3–4 dB at 9.8 and 6.5 GHz. The measured IIP_3 is greater than +45 dBm, and the filter can handle 250 mW of RF power. The effect of bias lines resistance is clearly seen in this filter and this is why Park et al. [43] developed orthogonal biasing networks for improved performance.

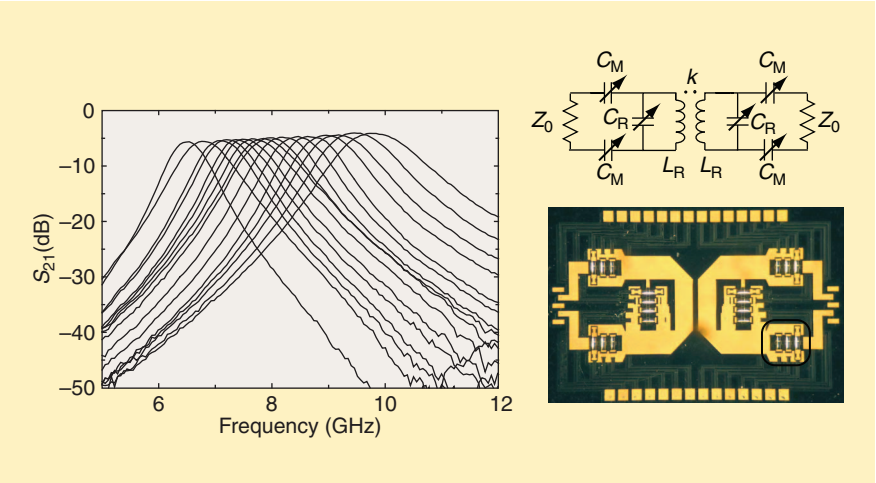

Figure 16. *A differential two-pole 6.5–10 GHz tunable filter built using UCSD capacitive switches (similar to Raytheon switches) and a switched-capacitor bank [45]. Excellent response and fine frequency stepping is achieved. 20 RF MEMS switches are used.*

12–15 GHz Two-Pole Tunable Filter Using Metal-Contact Switches

Pothier et al. at the University of Limoges developed a 12–15 GHz two-pole, 2-bits tunable filter on an alumina substrate using metal-contact switches and two capacitive loads attached to the combline resonator [46] (Figure 17). In order to maintain a high-Q, several RF MEMS switches are placed in parallel so as to reduce the effective series resistance. The measured tunable resonator Q is 75 which is impressive in this frequency range. The filter results in an insertion loss of 2.6–2.9 dB and a relative bandwidth of 5.6–5.8% over the 12–15 GHz tuning range. This is an impressive microstrip-based filter with potential for high-Q at Ku-band frequencies.

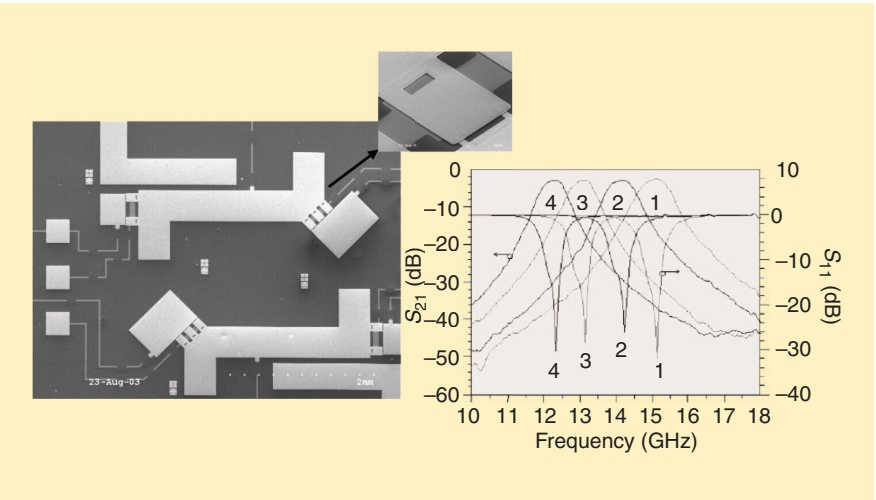

Figure 17. *A two-pole 12–15 GHz tunable filter built using metal contact switches (similar to Radant MEMS switches) and a switched-capacitor bank built using open-circuit stubs [46]. A Q of 75 was achieved. 10 RF MEMS switches are used.*

12–18 GHz Three-Pole Tunable Filter Using Switched Capacitors

Entesari et al. at the University of Michigan also developed

Authorized licensed use limited to: US Naval Academy. Downloaded on November 2, 2009 at 14:08 from IEEE Xplore. Restrictions apply.

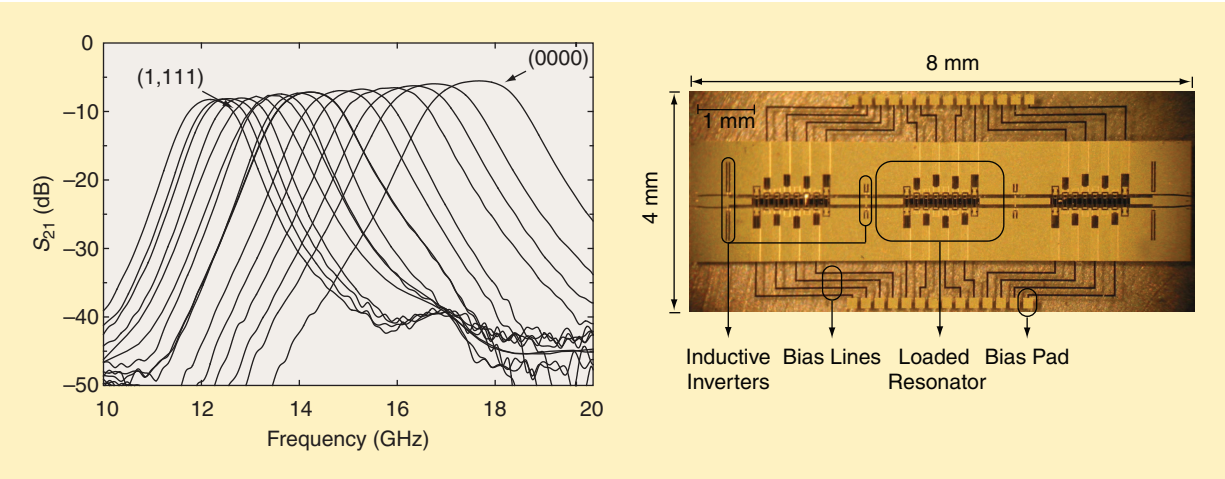

Figure 18. *A three-pole, 5.7% 12–18 GHz tunable filter built using RF MEMS capacitive switches (similar to Raytheon design) [47]. Very fine resolution is achieved. Twenty-four RF MEMS capacitive switches are used.*

a wide-band 12–18 GHz three-pole tunable filter using capacitively loaded CPW lines on glass substrates [47] (Figure 18). The insertion loss is 5.5–8.2 dB at 17.8–12.2 GHz for a 2 kΩ/sq bias line. The measured tunable Q is 30. The loss improves to 4.5–6.8 dB at 17.8–12.2 GHz if the bias line resistance is increased to 20 kΩ/sq. The relative bandwidth of the filter is 5.7+/−0.4% and the measured IIP_3 is greater than 37 dBm. This is the widest band tunable filter to-date and covers the entire Ku-band (12–18 GHz) frequency range. However, more improvement is needed in the tunable Q and this is mostly due to the CPW resonator design and the 1 kΩ/sq bias-lines.

18–21.4 GHz Three-Pole Tunable Filter Using Analog Varactors

Tamijani et al. at the University of Michigan developed a continuously tunable three-pole tunable filter on a glass substrate and using loaded CPW lines with MEMS varactors (Cr = 1.5:1) [48] (Figure 19). The miniature filter has a tuning range of 18.6–21.4 GHz with a fractional bandwidth of 7.5+/−0.2% and an insertion loss of 3.85–4.15 dB. The tunable Q is ~50 and is limited by the CPW resonator on a glass substrate. There are very few bias lines since this is an analog design and not a switched capacitor design. The measured IIP_3 is greater than 50 dBm. A wider tuning range (18–24 GHz) can be achieved if the varactor tuning range is increased to 2:1.

Other Filters

Raytheon developed a five-pole 6–18 GHz RF MEMS tunable low-pass and high-pass filters and when cascaded with each other, one can achieve a bandpass filter with virtually any bandwidth and any center frequency [49]. The penalty paid is excessive loss, and an X-band filter covering 8–12 GHz with 500 MHz bandwidth with 10–13 dB of loss. Other designs include bandstop filters at Raytheon, UCSD, NG, and the University of Waterloo, but these are not as mature as bandpass filters and will not be covered here.

It is evident that tunable filters can result in a Q above 100 from 1–6 GHz. The RF MEMS devices,

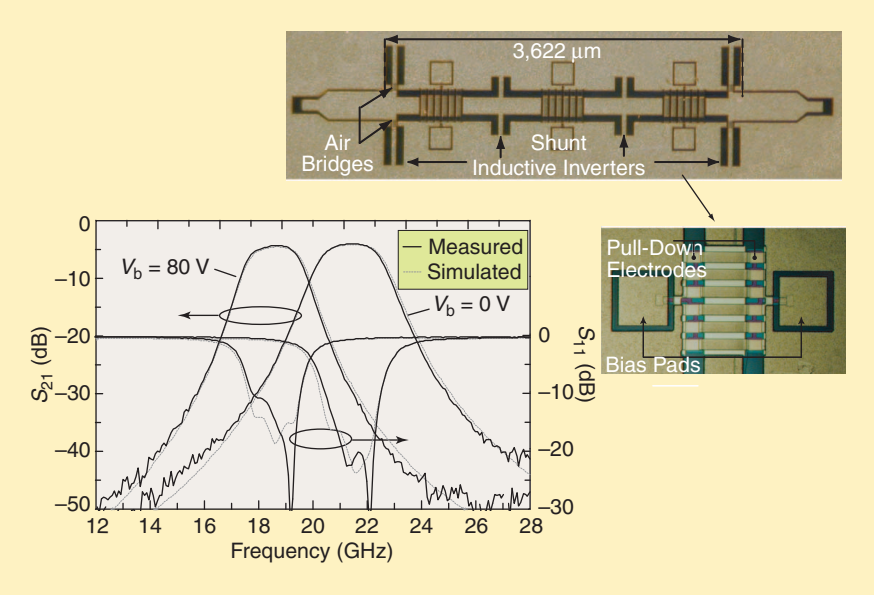

Figure 19. *A three-pole, 7% 18–21.5 GHz tunable filter built using RF MEMS varactors with extended tuning range [48]. A Q of 50 was achieved.*

Authorized licensed use limited to: US Naval Academy. Downloaded on November 2, 2009 at 14:08 from IEEE Xplore. Restrictions apply.

The Quest for Very High-Tunable *Q*: Going 3-D

There are three groups that are pioneering 3-D tunable filters: Yan et al. used a thermal MEMS actuator over a three-pole dielectric resonator filter in a waveguide cavity and achieved a 400 MHz tuning at 15.7 GHz with an insertion loss of 1.5–4.5 dB [S14]. The filter bandwidth was 150–200 MHz (1–1.3%) and therefore, the tunable *Q* is 300–900 (Figure S2). This is commendable but the tuning range is low and the required dc power is 300 mW due to thermal actuation.

Park et al. developed a miniature high-*Q* tunable evanescent-mode cavity filter using planar capacitive RF MEMS switch networks [S15]. The two-pole filter, with an internal volume of 1.5 cc, results in an insertion loss of 4.9–3.2 dB and a 1-dB bandwidth of 18–41 MHz (0.45–0.7%) at 4.07–5.58 GHz, respectively, and an ultimate rejection of greater than 80 dB (Figure S3). RF MEMS switches with digital/analog tuning capabilities were used to align the two poles together. The measured *Q* is 300–497 over the tuning range. The filter can withstand an acceleration of ~60g without affecting its frequency response.

Liu et al. developed a tunable two-pole filter

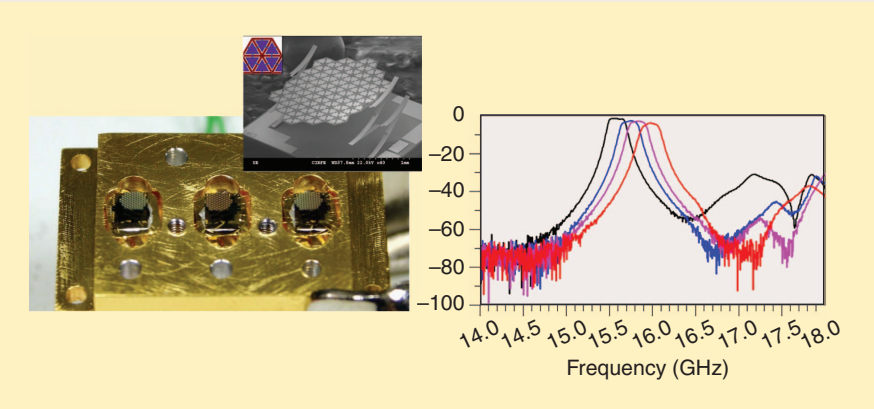

Figure S2. *A three-pole, 1–1.3%, dielectric resonator filter centered at 15.7 GHz filter by the University of Waterloo [S14]. The tunable is achieved using a movable thermally actuated RF MEMS metal sheet above the dielectric resonator, with a tuning Q of 300–900. This is the best tunable filter Q in the world, but the tuning range is only 2.5% (400 MHz).*

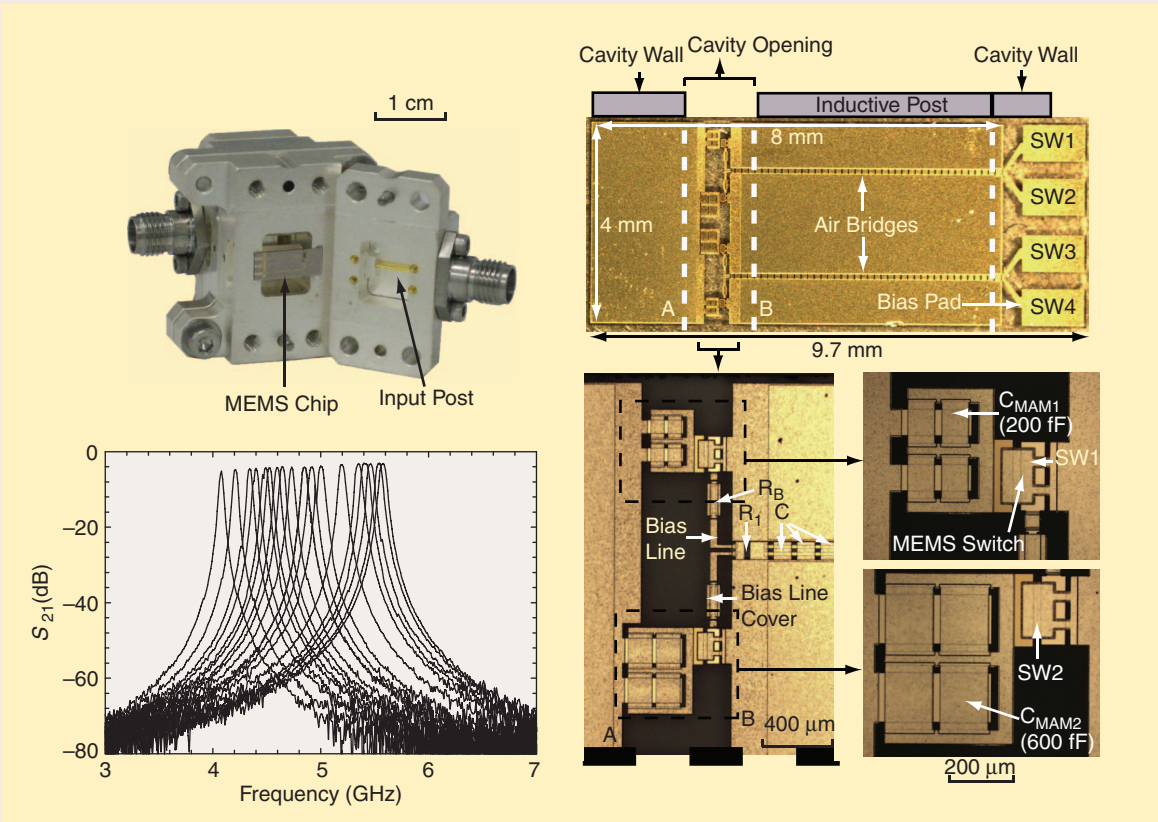

Figure S3. *Tunable 3-D evanescent mode filter by UCSD [S4]. Eight RF MEMS switched capacitors are used. A Q of 300–497 was achieved for a tuning range from 4.1–5.6 GHz.*

Authorized licensed use limited to: US Naval Academy. Downloaded on November 2, 2009 at 14:08 from IEEE Xplore. Restrictions apply.

evanescent-mode cavity filter using a continuously movable silicon/gold membrane and a 0–120 V actuation voltage [S16]. The filter tunes from 3.76 GHz to 5.17 GHz with bandwidth of 0.7% and insertion loss less of than 5 dB, and with an ultimate rejection of greater than 60 dB (Figure S4). The measured Q is 300–405 over the tuning range. Mechanical stability measurements show that the tunable filter exhibit very low frequency drift over time due to the silicon/gold membrane.

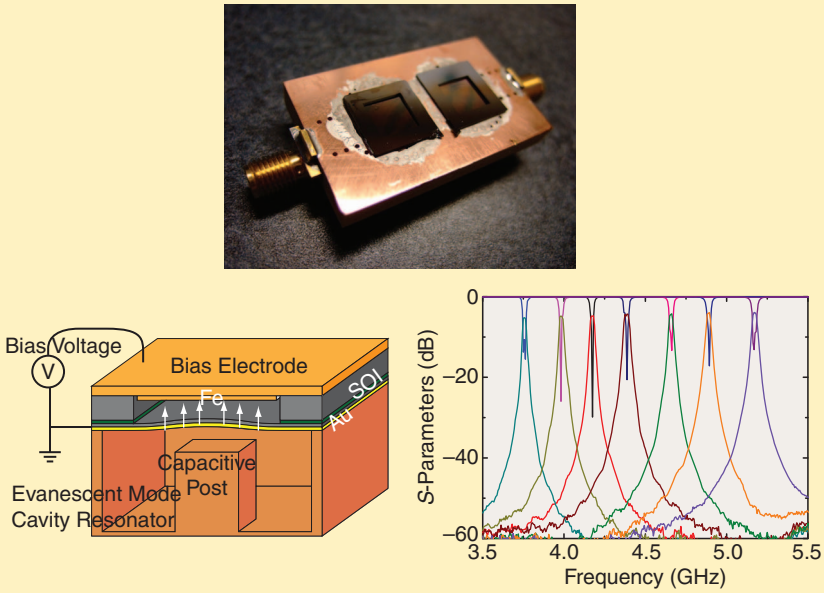

Figure S4. *Tunable 3-D evanescent mode filter by Purdue [S5]. The two-pole filter tunes from 3.76–5.17 GHz with a Q of 300-405.*

References

[S14] W. D. Yan and R. R. Mansour, "Tunable dielectric resonator bandpass filter with embedded MEMS tuning elements," *IEEE Trans. Microwave Theory Tech.*, vol. 55, no. 1, pp. 154–160, Jan. 2007.

[S15] S. Park, I. Reines, C. Patel, and G. M. Rebeiz, "High-*Q* RF-MEMS 4-6 GHz tunable evanescent-mode cavity filter," submitted for publication. (Also in *IEEE MTT-S Int. Microwave Symp. Dig.*, Boston, MA, June 2009, pp. 1145–1148).

[S16] X. Liu, L. P. B. Katehi, W. J. Chappell, and D. Peroulis, "High-*Q* continuously tunable evanescent-mode cavity resonators and filters using reliable RF MEMS actuators," submitted for publication. (Also in *IEEE MTT-S Int. Microwave Symp. Dig.*, Boston, MA, June 2009, pp. 1149–1152).

especially if based on a capacitive switch designs, have a Q of 100–400 at 1–26 GHz depending on their design, and the RF losses in the bias lines can be minimized using high resistivity layers (50–100 kΩ/sq). Therefore, the inherent Q limitation of planar filters is given by the lumped-element or microstrip-line resonator itself and is 100–250 at 1–18 GHz. This is sufficient for applications such as tunable two- and three-pole filters with greater than 4% bandwidth. However, there are some defense and satellite applications that require a much higher tunable Q (300–600) and these can be achieved using novel 3-D filter designs (see "The Quest for Very-High-Tunable Q: Going 3-D").

Conclusion

RF MEMS technology was initially developed as a replacement for GaAs HEMT switches and p-i-n diodes for low-loss switching networks and X-band to mm-wave phase shifters. However, we have found that its very low loss properties (high device Q), its simple microwave circuit model and zero power consumption, its high power (voltage/current) handling capabilities, and its very low distortion properties, all make it the ideal tuning device for reconfigurable filters, antennas and impedance matching networks. In fact, reconfigurable networks are currently being funded at the same level—if not higher—than RF MEMS phase shifters, and in our opinion, are much more challenging for high-Q designs.

References

[1] G. M. Rebeiz, *RF MEMS: Theory, Design, and Technology*. Hoboken, NJ: Wiley, 2003.

[2] G. M. Rebeiz and J. B. Muldavin, "RF MEMS switches and switch circuits," *IEEE Microwave Mag.*, vol. 2, no. 4, pp. 59–71, Dec. 2001.

[3] S. Majumder, J. Lampen, R. Morrison, and J. Maciel, "A packaged, high-lifetime ohmic MEMS RF switch," in *IEEE MTT-S Int. Microwave Symp. Dig.*, Philadelphia, PA, June 2003, pp. 1935–1938.

[4] C. Goldsmith, J. Ehmke, A. Malczewski, B. Pillans, S. Eshelman, Z. Yao, J. Brank, and M. Eberly, "Lifetime characterization of capacitive RF MEMS switches," in *IEEE MTT-S Int. Microwave Symp. Dig.*, Long Beach, CA, June 2001, pp. 227–300.

[5] J. B. Muldavin, R. Boisvert, C. Bozler, S. Rabe, and C. Keast, "Power handling and linearity of MEMS capacitive series switches," in *IEEE MTT-S Int. Microwave Symp. Dig.*, Philadelphia, PA, June 2003, pp. 1915–1918.

[6] B. Lakshminarayanan and G. M. Rebeiz, "High-power high-reliability sub-microsecond RF MEMS switched capacitors," in *IEEE MTT-S Microwave Symp. Dig.*, Honolulu, HI, June 2007, pp. 1801–1804.

[7] B. Lakshminarayanan, D. Mercier, and G. M. Rebeiz, "High reliability miniature RF MEMS switched capacitors," *IEEE Trans. Microwave Theory Tech.*, vol. 56, no. 4, pp. 971–981, Apr. 2008.

[8] A. Grichener, B. Lakshminarayanan, and G. M. Rebeiz, "High-*Q* RF MEMS capacitor with digital/analog tuning capabilities," in *IEEE MTT-S Int. Microwave Symp. Dig.*, Atlanta, GA, June 2008, pp. 1283–1286.

[9] C. Palego, A. Pothier, T. Gasseling, A. Crunteanu, C. Cibert, C. Champeaux, P. Tristant, A. Catherinot, and P. Blondy, "RF-MEMS

Authorized licensed use limited to: US Naval Academy. Downloaded on November 2, 2009 at 14:08 from IEEE Xplore. Restrictions apply.

switched varactor for high power applications," in *IEEE MTT-S Int. Microwave Symp. Dig.*, Long Beach, CA, June 2005, pp. 35–38.

[10] R. L. Borwick, III, P. A. Stupar, J. F. DeNatale, R. Anderson, and R. Erlandson, "Variable MEMS capacitors implemented into RF filter systems," *IEEE Trans. Microwave Theory Tech.*, vol. 51, no. 1, pp. 315–319, Jan. 2003.

[11] J. B. Muldavin, C. Bozler, S. Rabe, and C. Keast, "Large tuning range analog and multi-bit MEMS varactors," in *IEEE MTT-S Int. Microwave Symp. Dig.*, Phoenix, AZ, June 2004, pp. 1919–1922.

[12] T. Ikehashi, T. Ohguro, E. Ogawa, H. Yamazaki, K. Kojima, M. Matsuo, K. Ishimaru, and H. Ishiuchi, "A robust RF MEMS variable capacitor with piezoelectric and electrostatic actuation," in *IEEE MTT-S Int. Microwave Symp. Dig.*, San Francisco, CA, June 2006, pp. 39–43.

[13] J. Kim, D. Kang, B. Min, and G. M. Rebeiz, "A single-chip 36-38 GHz 4-element transmit/receive phased-array with 5-bit amplitude and phase control," in *IEEE MTT-S Int. Microwave Symp. Dig.*, Boston, MA, June 2009, pp. 561–564.

[14] K. Koh and G. M. Rebeiz, "A 6–18 GHz 8-element phased array receiver in 0.18-µm SiGe BiCMOS technology," *IEEE J. Solid-State Circuits*, vol. 43, no. 6, pp. 1360–1371, June 2008.

[15] K. Koh and G. M. Rebeiz, "A millimeter-wave (40–45 GHz) SiGe BiCMOS 16-element phased-array transmitter," *IEEE J. Solid-State Circuits*, vol. 44, no. 5, pp. 1498–1509, May 2009.

[16] S. K. Reynolds, et al., "A silicon 60-GHz receiver and transmitter chipset for broadband communications," *IEEE J. Solid-State Circuits*, vol. 41, no. 12, pp. 2820–2831, Dec. 2006.

[17] D. Alldred, B. Cousins, and S. P. Voinigescu, "A 1.2 V, 60-GHz radio receiver with on-chip transformers and inductors in 90-nm CMOS," in *Proc. Compound Semiconductor Integrated Circuit Symp.*, Nov. 2006, pp. 51–54.

[18] W. Panton, "The challenge of tunable front ends in UMTS cellular handsets," in *Proc. IEEE MTT-S Int. Microwave Symp. Workshop High-Q Tunable RF MEMS Filters*, Honolulu, HI, June 2007.

[19] R. Newgard, personal communication.

[20] A. Bezooijen, M. Jongh, C. Chanlo, L. Ruijs, H. D. Jan-Ten, P. Lok, F. Straten, J. Sneep, R. Mahmoudi, and A. Roermund, "RF-MEMS based adaptive antenna matching module," in *Proc. IEEE Radio Frequency Integrated Circuits Symp.*, June 2007, pp. 573–577.

[21] A. Fukuda, H. Okazaki, T. Hirota, and Y. Yamao, "Novel 900 MHz/1.9 GHz dual-mode power amplifier employing MEMS switches for optimum matching," *IEEE Microwave Wireless Compon. Lett.*, vol. 14, no. 3, pp. 121–124, Mar. 2004.

[22] T. Vaha-Heikkilla and G. M. Rebeiz, "A 4-18 GHz reconfigurable RF MEMS matching network for power amplifier applications," *Int. J. RF Microwave Comput. Aided Eng. (Special Issue on Radio Frequency Microelectromechanical System)*, vol. 14, no. 4, pp. 356–372, July 2004.

[23] T. Vaha-Heikkilla, J. Varis, J. Tuovinen, and G. M. Rebeiz, "A 20–50 GHz single-stub impedance tuner," *IEEE Microwave Wireless Compon. Lett.*, vol. 15, no. 4, pp. 205–207, Apr. 2005.

[24] Q. Dongjiang, R. Molfino, S. M. Lardizabal, B. Pillans, P. M. Asbeck, and G. Jerinic, "An intelligently controlled RF power amplifier with a reconfigurable MEMS-varactor tuner," *IEEE Trans. Microwave Theory Tech.*, vol. 53, no. 3, pp. 1089–1095, Mar. 2005.

[25] J. Maciel, "Recent reliability results in RF MEMS," in *Proc. IEEE MTT-S Int. Microwave Symp. Workshop Recent Applications RF MEMS*, Long Beach, CA, June 2003.

[26] J. L. Ebel, R. Cortez, K. D. Leedy, and R. E. Strawser, "Hermetic thin-film encapsulation for RF MEMS switches," in *Proc. GOMAC Tech. Conf.*, Las Vegas, NV, Apr. 2005, pp. 327–330.

[27] J. Denatale, personal communication.

[28] M. Daneshmand and R. R. Mansour, "Monolithic RF MEMS switch matrix integration," in *IEEE MTT-S Int. Microwave Symp. Dig.*, San Francisco, CA, June 2006, pp. 140–143.

[29] M. Daneshmand and R. R. Mansour, "C-type and R-type RF MEMS switches for redundancy switch matrix applications," in *IEEE MTT-S Int. Microwave Symp. Dig.*, San Francisco, CA, June 2006, pp. 144–147.

[30] G. M. Rebeiz, G. L Tan, and J. S. Hayden, "RF MEMS phase shifters: Design and applications," *IEEE Microwave Mag.*, vol. 3, no. 2, pp. 72–81, June 2002.

[31] C. D. Nordquist, C. W. Dyck, G. M. Kraus, I. C. Reines, C. L. Goldsmith, W. D. Cowan, T. A. Plut, F. Austin, IV, P. S. Finnegan, M. H. Ballance, and C. T. Sullivan, "A dc to 10-GHz 6-b RF MEMS time delay circuit," *IEEE Microwave Wireless Compon. Lett.*, vol. 16, no. 5, pp. 305–307, May 2006.

[32] G. L. Tan, R. E. Mihailovich, J. B. Hacker, J. F. DeNatale, and G. M. Rebeiz, "Low-loss 2- and 4-bit TTD MEMS phase shifters based on SP4T switches," *IEEE Trans. Microwave Theory Tech. (Special Issue on Radio Frequency Microelectromechanical System)*, vol. 51, no. 1, pp. 297–304, Jan. 2003.

[33] K. Entesari and G. M. Rebeiz, "RF MEMS, BST and GaAs varactor system-level response in complex modulation systems," *Int. J. RF Microwave Comput. Aided Eng.*, vol. 18, pp. 86–98, Jan. 2008.

[34] B. Acikel, T. R. Taylor, P. J. Hansen, J. S. Speck, and R. A. York, "A new high performance phase shifter using BaSrTiO thin films," *IEEE Microwave Wireless Compon. Lett.*, vol. 12, no. 7, pp. 237–239, July 2002.

[35] J. Nath, D. Ghosh, J. P. Maria, A. I. Kingon, A. I. W. Fathelbab, P. D. Franzon, and M. B. Steer, "An electronically tunable microstrip bandpass filter using thin-film barium-strontium-titanate (BST) varactors," *IEEE Trans. Microwave Theory Tech.*, vol. 53, no. 9, pp. 2707–2712, Sept. 2005.

[36] A. Tombak, J .P. Maria, F. T. Ayguavives, J. Zhang, G. T. Stauf, A. I. Kingon, and A. Mortazawi, "Voltage-controlled RF filters employing thin-film barium-strontium-titanate tunable capacitors," *IEEE Trans. Microwave Theory Tech.*, vol. 51, no. 2, part 1, pp. 462–467, Feb. 2003.

[37] K. Entesari, K. Obeidat, A. R. Brown, and G. M. Rebeiz, "A 25-75 MHz RF MEMS tunable filter," *IEEE Trans. Microwave Theory Tech.*, vol. 55, no. 11, pp. 2399–2405, Nov. 2007.

[38] C. A. Hall, R. C. Luetzelschwab, R. D. Streeter, and J. H. VanPatten, "A 25 watt RF MEM-tuned VHF bandpass filter," in *IEEE MTT-S Int. Microwave Symp. Dig.*, Philadelphia, PA, June 2003, pp. 503–506.

[39] J. Brank, J. Yao, M. Eberly, A. Malczewski, K. Varian, and C. L. Goldsmith, "RF MEMS-based tunable filters," *Int. J. RF Microwave Comput. Aided Eng.*, vol. 11, pp. 276–284, Sept. 2001.

[40] R. M. Young, J. D. Adam, C. R. Vale, T. T. Braggins, S. V. Krishnaswamy, C. E. Milton, D. W. Bever, L. G. Chorosinski, L. S. Chen, D. E. Crockett, C. B. Freidhoff, S. H. Talis, E. Capelle, R. Tranchini, J. R. Fende, J. M. Lorthioir, and A. R. Torres, "Low-loss bandpass RF filter using MEMS capacitance switches to achieve a one-octave tuning range and independently variable bandwidth," in *IEEE MTT-S Int. Microwave Symp. Dig.*, Philadelphia, PA, June 2003, pp. 1781–1784.

[41] M. A. El-Tanani and G. M. Rebeiz, "High performance 1.5–2.5 GHz RF MEMS tunable filters for wireless applications," submitted for publication.

[42] I. C. Reines, A. R. Brown, and G. M. Rebeiz, "1.6–2.4 GHz RF MEMS tunable 3-pole suspended combline filter," in *IEEE MTT-S Int. Microwave Symp. Dig.*, Atlanta, GA, June 2008, pp. 133–136.

[43] S. Park, M. A. El-Tanani, I. C. Reines, and G. M. Rebeiz, "Low-loss 4-6 GHz with 3-bit orthogonal RF MEMS capacitance network," *IEEE Trans. Microwave Theory Tech.*, vol. 56, no. 10, pp. 2348–2355, Jan. 2008.

[44] G. M. Kraus, C. L. Goldsmith, C. D. Nordquist, C. W. Dyck, P. S. Finnegan, F. Austin, IV, A. Muyshondt, and C. T. Sullivan, "A widely tunable RF MEMS end-coupled filter," in *IEEE MTT-S Int. Microwave Symp. Dig.*, Dallas, TX, June. 2004, pp. 429-432.

[45] K. Entesari and G. M. Rebeiz, "A differential 4-bit 6.5-10 GHz RF MEMS tunable filter," *IEEE Trans. Microwave Theory Tech.*., vol. 53, no. 3, pp. 1103–1110, Mar. 2005.

[46] A. Pothier, J.-C. Orlianges, E. Zheng, C. Champeaux, A. Catherinot, D. Cros, P. Blondy, and J. Papapolymerou, "Low loss two bit tunable bandpass filters using MEMS dc contact switches," *IEEE Trans. Microwave Theory Tech.*, vol. 53, no. 1, pp. 354–360, Jan. 2005.

[47] K. Entesari and G. M. Rebeiz, "A 12–18 GHz 3-pole RF MEMS tunable filter," *IEEE Trans. Microwave Theory Tech.*, vol. 53, no. 8, pp. 2566–2571, Aug. 2005.

[48] A. A. Tamijani, L. Dussopt, and G. M. Rebeiz, "Miniature and tunable filters using MEMS capacitors," *IEEE Trans. Microwave Theory Tech.*, vol. 51, no. 7, pp. 1878–1885, July 2003.

[49] B. Pillans, A. Malczewski, R. Allison, and J. Brank, "6–15 GHz RF MEMS tunable filters," in *IEEE MTT-S Digest*, Long Beach, CA, June 2005, pp. 919–922.

Authorized licensed use limited to: US Naval Academy. Downloaded on November 2, 2009 at 14:08 from IEEE Xplore. Restrictions apply.