C3M5a

Tangent Planes

We will learn soon that if f is a real-valued function with domain $D \subseteq \mathbb{R}^2$, i.e. $D \xrightarrow{f} \mathbb{R}$ then the gradient of f at $X = (x, y)$ denoted by $\nabla f(X)$, $grad\, f(X)$, or $grad\, f\big|_X$ is defined by

$$\nabla f(X) = \left\langle \frac{\partial f}{\partial x}\bigg|_X, \frac{\partial f}{\partial y}\bigg|_X \right\rangle = \langle f_x(x,y), f_y(x,y) \rangle = f_x(x,y)\vec{i} + f_y(x,y)\vec{j}$$

The gradient is a very important concept that is useful when discussing rates of change of functions of several variables. It is usually introduced in a course after partial derivatives have been defined, the chain rule has been discussed, and when the applications are being surveyed. Once the concept of the derivative of a real-valued multivariable function is introduced, the student can understand that this derivative somehow coincides with the gradient. The actual derivative at a point is a *linear mapping* which is evaluated by multiplication by a matrix. And that matrix is none other than the gradient (with the commas deleted).

In the single variable case where $y = f(x)$ and x_0 is a point in the domain, if $m = f'(x_0)$, then $\langle m \rangle$ is the gradient. The slope of the tangent line at x_0 is m and if one moves one unit to the right of x_0, then the change in value for the tangent line is exactly m. So this simple diagram is valid.

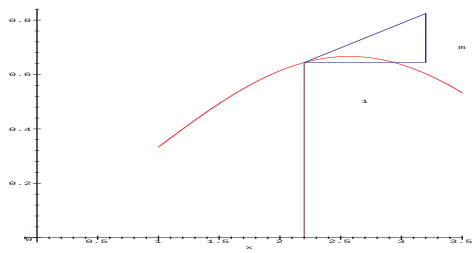

Returning to the case where $z = f(x, y)$, the same geometric approach is valid. When (x_0, y_0) is in the domain of f and the graph of f is viewed in $\mathbb{R}^3$, consider the vertical planes containing $(x_0, y_0, 0)$ that are parallel to the xz-plane and the yz-plane. Let's put this on a more concrete footing. Suppose that

$$\frac{\partial f}{\partial x}\bigg|_{(x_0,y_0)} = f_x(x_0, y_0) = m_1 \qquad \text{and} \qquad \frac{\partial f}{\partial y}\bigg|_{(x_0,y_0)} = f_y(x_0, y_0) = m_2$$

While it is true that $\nabla f(x_0, y_0) = \langle m_1, m_2 \rangle$, our focus here is not on the gradient. Rather, for now it is sufficient that one understand that we have evaluated the partial derivatives at (x_0, y_0) and obtained two **numbers** that serve as slopes in the x and y directions respectively. Then, we construct the vectors $\vec{v_1} = \langle 1, 0, m1 \rangle$ and $\vec{v_2} = \langle 0, 1, m2 \rangle$ and note that each is a **tangent vector** to the surface Σ defined by $z = f(x, y)$ when they are viewed as emanating from $\vec{X_0} = (x_0, y_0, f(x_0, y_0))$. It is very important to have a geometric understanding of where $\vec{v_1}$ and $\vec{v_2}$ fit in the picture. We see that $\vec{v_1}$ is the tangent vector in the vertical plane parallel to the xz-plane and $\vec{v_2}$ is the tangent vector in the vertical plane parallel to the yz-plane. Each is aimed downward here. Observe the diagrams that follow.

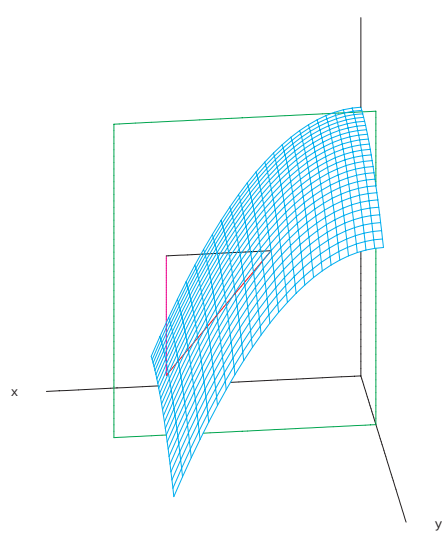

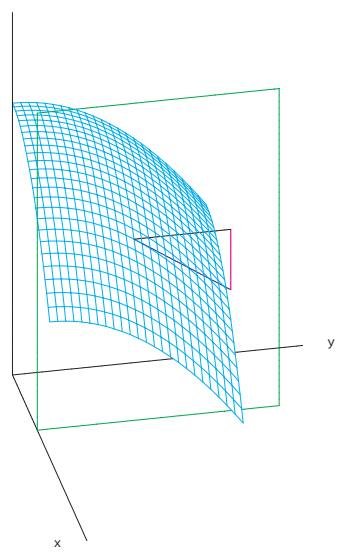

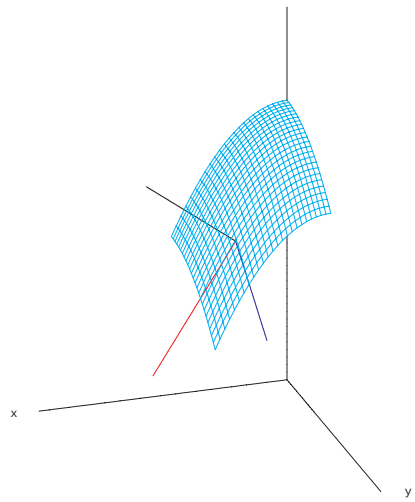

For purposes of finding the basic equation for a plane tangent to the surface Σ, it is best to use $-\vec{N} = \vec{N_1} = \langle m_1, m_2, -1 \rangle$. If $\vec{X} = \langle x, y, z \rangle$

$$\vec{N_1} \cdot \left(\vec{X} - \vec{X_0} \right) = 0$$
$$\Longrightarrow \quad m_1(x - x_0) + m_2(y - y_0) - (z - z_0) = 0$$
$$\Longrightarrow \quad z - z_0 = m1(x - x_0) + m_2(y - y_0)$$

yields three forms of our equation for the tangent plane. It is important to remember that m_1 and m_2 are numbers and are **NOT** expressions including variables.

Maple Example: For $f(x, y) = (9 - 2x^2 - y^2)/3$ and $(x_0, y_0) = (1, 1)$, find:

(a) a vector normal to the surface defined by $z = f(x, y)$ at $(1, 1)$, and an equation for the tangent plane at $X_0 = \left(x_0, y_0, f(x_0, y_0)\right)$.

(b) Plot the surface, normal vector, tangent plane, and a line from $(x_0, y_0, 0)$ to X_0.

```
> restart:    with(plots):    with(linalg):
> f:=(x,y)->(9-2*x^2-y^2)/3;
```

$$f := (x, y) \to 3 - \frac{2}{3}x^2 - \frac{1}{3}y^2$$

```
> x0:=1;  y0:=1;  z0:=f(x0,y0);
```

$$x0 := 1$$
$$y0 := 1$$
$$z0 := 2$$

```
> X:=[x,y,z];  X0:=[x0,y0,z0];
```

$$X := [x, y, z]$$
$$X0 := [1, 1, 2]$$

```
> fx:=diff(f(x,y),x);  fy:=diff(f(x,y),y);
```

$$fx := -\frac{4}{3}x$$
$$fy := -\frac{2}{3}y$$

```
> m1:=subs(x=x0,y=y0,fx);  m2:=subs(x=x0,y=y0,fy);
```

$$m1 := \frac{-4}{3}$$
$$m2 := \frac{-2}{3}$$

Our tangent vectors in the x and y directions are determined.

```
> vx:=[1,0,m1];  vy:=[0,1,m2];
```

$$vx := \left[1, 0, \frac{-4}{3}\right]$$

$$vy := \left[0, 1, \frac{-2}{3}\right]$$

We find the normal vector, which is orthogonal to our two tangent vectors.

```
> N:=crossprod(vx,vy);
```

$$N := \left[\frac{4}{3}, \frac{2}{3}, 1\right]$$

```
> xaxis:=spacecurve([t,0,0],t=0..3,color=black):
> yaxis:=spacecurve([0,t,0],t=0..3,color=black):
> zaxis:=spacecurve([0,0,t],t=0..4,color=black):
> surff:=plot3d(f(x,y),x=0..2,y=0..2,color=cyan):
```

The line which represents the normal vector to the surface is plotted using a vector expression. We use 'evalm' to evaluate the expression to obtain the vector format we need for 'spacecurve'.

```
> Nline:=spacecurve(evalm(X0+t*N),t=0..1,color=magenta):
> X1:=vector([x0,y0,0]);
```

$$X1 := [x0, y0, 0]$$

Important: The easiest way to parameterize a line segment between two points (or vectors) P and Q is as $(1-t)P + tQ$ for $0 \le t \le 1$. We apply this in our next plot.

```
> Vline:=spacecurve(evalm((1-t)*X1+t*X0),t=0..1,color=blue):
```

Use the basic equation $\vec{N} \cdot \vec{X} = \vec{N} \cdot \vec{X_0}$ for a tangent plane to get an expression for z.

```
> eq1:=dotprod(N,X)=dotprod(N,X0);
```

$$eq1 := \frac{4}{3}x + \frac{2}{3}y + z = 4$$

```
> zee:=solve(eq1,z);
```

$$zee := -\frac{4}{3}x - \frac{2}{3}y + 4$$

```
> tplane:=plot3d(zee,x=.3..(1.7),y=.3..(1.7),color=sienna):
> display(xaxis,yaxis,zaxis,surff,Nline,Vline,tplane);
```

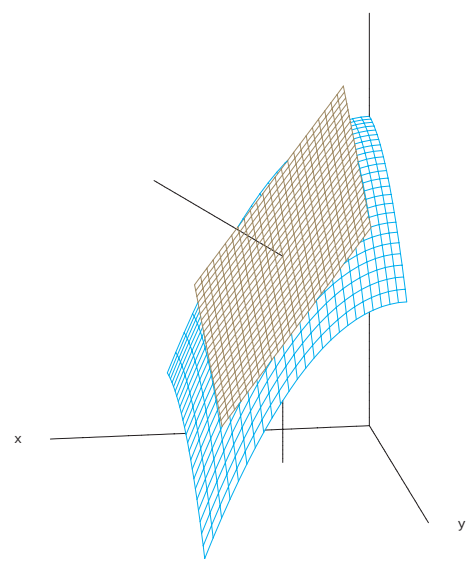

C3M5a Problem: Given $f(x,y) = 2\cos(x) + 2\sin(x)\cos(y)$ and $(x_0, y_0) = (\pi/3, -\pi/3)$. Use Maple to:

(a) Find an equation of the tangent plane to the surface $z = f(x,y)$ at $\big(x_0, y_0, f(x_0, y_0)\big)$.

(b) Plot the surface for $0 \le x \le 1.8$ and $-1.5 \le y \le .5$, a line representing the normal vector at $\big(x_0, y_0, f(x_0, y_0)\big)$, a line from $(x_0, y_0, 0)$ to $\big(x_0, y_0, f(x_0, y_0)\big)$. Include the coordinate axes. Hint: let the

y-axis range from -2 to 2.