This article was downloaded by: *[United States Naval Academy]*
On: *21 January 2009*
Access details: *Access Details: [subscription number 789040243]*
Publisher *Taylor & Francis*
Informa Ltd Registered in England and Wales Registered Number: 1072954 Registered office: Mortimer House, 37-41 Mortimer Street, London W1T 3JH, UK

Biofouling
Publication details, including instructions for authors and subscription information:
http://www.informaworld.com/smpp/title~content=t713454511

Hydrodynamic forces on barnacles: Implications on detachment from fouling-release surfaces

Michael P. Schultz [ab]; Christopher J. Kavanagh [a]; Geoffrey W. Swain [a]
[a] Department of Oceanography and Ocean Engineering, Florida Institute of Technology, Melbourne, FL, USA
[b] Division of Engineering R&D, Harbor Branch Oceanographic Institution, Fort Pierce, FL, USA

First Published on: 01 April 1999

To cite this Article Schultz, Michael P., Kavanagh, Christopher J. and Swain, Geoffrey W.(1999)'Hydrodynamic forces on barnacles: Implications on detachment from fouling-release surfaces',Biofouling,13:4,323 — 335
To link to this Article: DOI: 10.1080/08927019909378388
URL: http://dx.doi.org/10.1080/08927019909378388

PLEASE SCROLL DOWN FOR ARTICLE

Full terms and conditions of use: http://www.informaworld.com/terms-and-conditions-of-access.pdf

This article may be used for research, teaching and private study purposes. Any substantial or systematic reproduction, re-distribution, re-selling, loan or sub-licensing, systematic supply or distribution in any form to anyone is expressly forbidden.

The publisher does not give any warranty express or implied or make any representation that the contents will be complete or accurate or up to date. The accuracy of any instructions, formulae and drug doses should be independently verified with primary sources. The publisher shall not be liable for any loss, actions, claims, proceedings, demand or costs or damages whatsoever or howsoever caused arising directly or indirectly in connection with or arising out of the use of this material.

Biofouling, 1999, Vol 13(4), pp 323–335
Reprints available directly from the publisher
Photocopying permitted by license only

© 1999 OPA (Overseas Publishers Association) N.V.
Published by license under
the Harwood Academic Publishers imprint,
part of The Gordon and Breach Publishing Group.
Printed in Singapore.

HYDRODYNAMIC FORCES ON BARNACLES: IMPLICATIONS ON DETACHMENT FROM FOULING-RELEASE SURFACES

MICHAEL P SCHULTZ*, CHRISTOPHER J KAVANAGH and GEOFFREY W SWAIN

Department of Oceanography and Ocean Engineering, Florida Institute of Technology, 150 W University Blvd, Melbourne, FL 32901, USA

(Received 7 September 1998; in final form 1 November 1998)

Concern over the environmental impact of traditional biocide-containing antifouling formulations has led to the development of non-toxic, fouling-release coatings. An "ideal" fouling-release surface for a ship is one that reduces the tenacity of biofouling to a point that hydrodynamic self-cleaning occurs under normal operating conditions. In order to address the feasibility of designing such a surface, an understanding of the relationship between the hydrodynamic forces and the strength of adhesion of the organism to the substrate is needed. This paper presents the results of an experimental investigation to measure the hydrodynamic lift and drag of an acorn barnacle (*Balanus eburneus*) attached to an instrumented foil. The results are used to generate a model of the tensile and shear stresses at the base of the barnacle, as a function of the water velocity. Predictions of the maximum barnacle adhesion strength in shear and tension that will allow detachment at operational speeds are offered.

Keywords: hydrodynamic forces; lift; drag; *Balanus eburneus*; fouling-release coatings

INTRODUCTION

It is well established that the accumulation of biofouling on a ship's hull leads to an increase in hydrodynamic drag (*e.g.* Anon, 1952; Lewthwaite *et al.*, 1985). This causes an increase in power requirements and a decrease in top speed. Traditionally, ship owners have controlled fouling using biocide-containing antifouling (AF) coatings. However, restrictions on organotin

* Corresponding author. Current address: Division of Engineering R&D, Harbor Branch Oceanographic Institution, 5600 US1 North, Fort Pierce, FL 34946, USA; fax: (561) 464-9094; e-mail: schultz@hboi.edu

paints and increasing concerns over the environmental impacts of copper and co-biocides have increased interest in alternative technologies (Swain, 1998).

An alternative approach to AF systems is the use of non-toxic, fouling-release coatings (Griffith & Bultman, 1980; Griffith, 1984). Fouling-release surfaces do not kill fouling but reduce its tenacity of adhesion. These surfaces are likely to become fouled, therefore, efficacy is determined by their ability to self-clean or by the ease with which they can be cleaned mechanically. Self-cleaning can occur under static conditions when the weight of the fouling community becomes sufficient for it to slough off. It can also result from hydrodynamic forces generated while the vessel is underway. Hydrodynamic self-cleaning is a function of the lift and drag forces experienced by the organism and the adhesion strength of the organism to the surface.

Several researchers have measured the lift and drag forces on sessile marine organisms in natural communities (Vogel, 1981; Denny *et al.*, 1985; Denny, 1988). There are also tensile and shear adhesion strength data for hard fouling organisms on both natural (Yule & Walker, 1984; Denny, 1995) and synthetic surfaces (Becka & Loeb, 1984; Swain *et al.*, 1992; Swain & Schultz, 1996).

The purpose of this paper is to relate the hydrodynamic forces on a solitary barnacle in a thin boundary layer to its adhesion strength and detachment from fouling-release coatings. To do this, a method was developed for the simultaneous measurement of lift and drag on a barnacle. A model of the hydrodynamic loading on a barnacle, and the resulting stresses at the base plate are offered. The model is used to predict the maximum barnacle adhesion strength that will allow self-cleaning of a coating at operational speeds.

MATERIALS AND METHODS

The methods used in the present investigation are discussed with respect to the experimental hydrodynamic measurements and the modeling of loads and stresses on a barnacle.

Hydrodynamic Measurements

Hydrodynamic measurements were made on dead barnacles attached to a force balance mounted in a foil towed along the side of a small skiff. Velocity was measured using a knotmeter mounted in the foil, and lift and

drag forces were monitored with a strain gage amplifier/conditioner display. Figure 1a shows a schematic of the measurement system. A small strain gage force balance was designed and constructed to measure the lift and drag forces on a barnacle in a water flow. The force balance consisted of a cross-shaped beryllium-copper 25 alloy beam mounted in a polyvinyl chloride (PVC) housing with an acrylic top. Eight strain gages (Micro-Measurements model EA-13-125AC-350) were mounted on the beam. Four gages each were wired in a full Wheatstone bridge arrangement to measure lift and drag. The design was similar to that used to investigate multi-directional loads on ship moorings (Wolfram, personal communication). The housing was filled with polydimethyl siloxane (PDMS) dielectric gel to prevent the intrusion of sea water. The design of the beam was optimized using the MSC/PAL2 finite element analysis package with estimated service loads. Figure 1b shows the force transducer. Details on the beam design and further information on the force balance transducer are given in Schultz (1992).

The force balance was connected to a Measurements Group DC powered 2100 system strain gage conditioner/amplifier by a multi-strand shielded cable. The signal conditioner provided separate bridge nulling and gain adjustment. It also contained a model 2131 digital display for strain monitoring on each channel. The system was powered by a 12V battery. The force balance was calibrated using precision weights. The accuracy of the balance to measure static lift and drag forces was ± 0.01 N. Combined lift and drag forces were applied to the balance. Cross talk between the two was negligible.

The force balance was mounted in a towed foil, 1.22 m in length. The foil had three ports to allow the position of the force balance to be mounted 0.31 m, 0.61 m, and 0.91 m from the leading edge. Also mounted in the foil was a through-hull paddlewheel transducer that was connected to a digital knotmeter to measure the flow velocity. The knotmeter was a Signet model 267A digital unit. The paddlewheel was mounted 0.41 m from the leading edge of the foil, on the side opposite the force balance. The unit was powered by a rechargeable 12V battery. Calibration runs were made over a reciprocal course of known distance at constant velocity. The runs were made at velocities from 0–4 m s^{-1}. The accuracy of the knotmeter over this range was ± 0.1 m s^{-1}.

Six test specimens were used in this investigation. The shapes used were a hemisphere, a cube, a square pyramid, and three barnacles. "Standard" test shapes were included for validation of the method, as these data could be compared with results from previous investigations. The hemisphere was

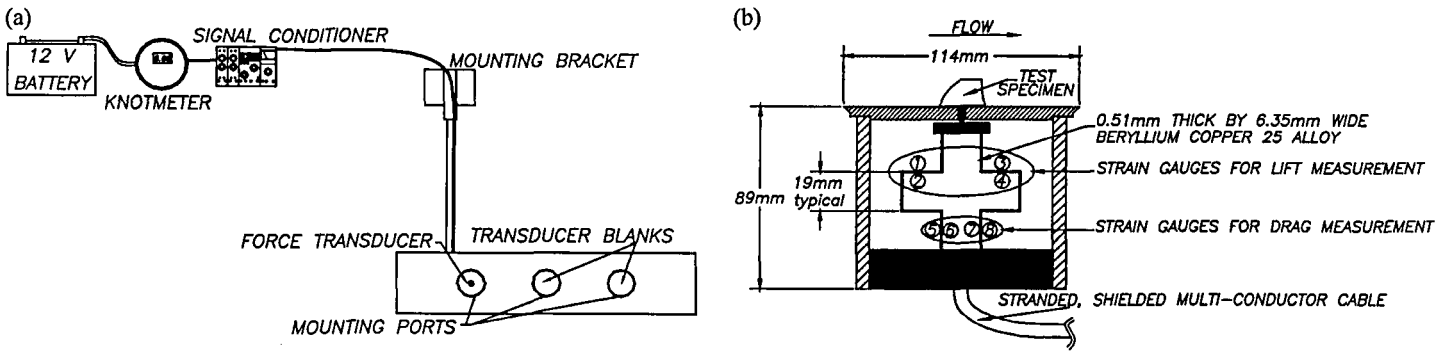

FIGURE 1 Hydrodynamic force measurement setup. (a) = system schematic; (b) = detail of the force transducer.

9.6 mm in diameter. The cube was 9.7 mm on an edge. The pyramid was 6.6 mm on edge at the base and 12.7 mm in height. Barnacle #1 had an average base diameter of 16.3 mm and a height of 7.1 mm. Barnacle #2 had an average base diameter of 16.7 mm and a height of 7.6 mm. Barnacle #3 had an average base diameter of 20.3 mm and a height of 11.9 mm.

The barnacles (*Balanus eburneus*) used in the experiment were cleaned and filled with epoxy. An 18 mm long, #4-40 stainless steel machine screw was potted into the epoxy and passed through the barnacle base to allow attachment to the force balance. The standard shapes were attached to the force balance by similar means. In order to prevent flow under the base of the specimens, a low modulus PDMS gel was used to fill the small gap between the specimen and the force transducer. Static loading of the transducer with the gel in place showed that it had a negligible effect on the system calibration.

Hydrodynamic force measurements were made on the six test shapes at velocities of 0 to 4 m s^{-1}. The tests were repeated with the force transducer mounted in the three streamwise ports. This allowed the effects of boundary layer thickness and development on lift and drag to be monitored.

Modeling the Loads and Stresses on a Barnacle

Predictions of lift and drag are usually based on standard formulae (Eqs 1 and 2)

$$F_L = \tfrac{1}{2} C_L A_P \rho U_e^2 = C_L A_P q \tag{1}$$

$$F_D = \tfrac{1}{2} C_D A_F \rho U_e^2 = C_D A_F q \tag{2}$$

where F_L = lift force, C_L = coefficient of lift, A_P = projected area, ρ = fluid density, U_e = freestream velocity, q = dynamic pressure, F_D = drag force, C_D = coefficient of drag, A_F = frontal area.

However, due to the complex flow patterns that develop along a ship's hull, the prediction of hydrodynamic forces on an individual organism is not trivial. One consideration in predicting forces on barnacles is their location on the hull. If the barnacle is located a large distance downstream, development of the boundary layer will lead to a case in which the barnacle height is much less than the boundary layer thickness. The barnacle will be located in an area of the flow with a velocity much less than the freestream value and will be subject to correspondingly lower forces. For example,

Saunders (1957) presents the variation in the turbulent boundary layer thickness with downstream distance for a flat plate. At a velocity of $12\,\mathrm{m\,s^{-1}}$, the boundary layer is 0.1 m thick, 12 m downstream of the leading edge. It reaches 0.5 m in thickness, 83 m downstream.

Another complication to an accurate prediction of forces is that barnacles often settle in groups, which can lead to sheltering and wake interaction effects. Further, the effective point of application of the loads must be considered, as this will affect the overturning moment and the resulting stress at the barnacle/coating interface. The behavior of C_L and C_D for barnacles at high Reynolds numbers is also unknown.

Because of these complexities, the present model contains many simplifying assumptions in order to make it tenable. Figure 2 illustrates the loading on a barnacle and an idealized model to predict the stresses. The barnacle is modeled as a truncated cone with a base diameter, d. To facilitate the calculation of the point of application of the forces, the model barnacle was drawn on a Cartesian coordinate system. The coordinates given in Figure 2b were obtained from the ratios of the dimensions of barnacles and represent typical values. The lift and drag forces are assumed to act at the centroid of the trapezoid defined by the intersection of a streamwise, wall normal plane and the centerline of the truncated cone. In Figure 2b, the lift and drag forces acting at the centroid are re-expressed as an equivalent loading, with the forces acting at the base. With this restatement of the problem, the tensile and shear stresses at the base, along the coating plane, can be predicted using simple beam theory (Eqs 3 and 4)

$$\sigma_y = \frac{P_A}{A_P} + \frac{Mc}{I} \tag{3}$$

$$\tau_{xy} = \frac{P_s}{A_P} \tag{4}$$

where σ_y = normal stress in the wall normal direction, P_A = wall normal load, A_P = projected area, M = applied moment, c = distance to the centroid, I = moment of inertia of projected area, τ_{xy} = shear stress, P_S = shear load.

Substituting the lift and drag forces and the area and moment of inertia of a circle of diameter, d, the tensile and shear stresses at the barnacle base can be solved. At point A (see Figure 2b), the tensile stress will be maximum, as the stress due to the applied moment, M, and the stress due to the lift are additive. Substituting into Eqn 3, the tensile stress at point A along

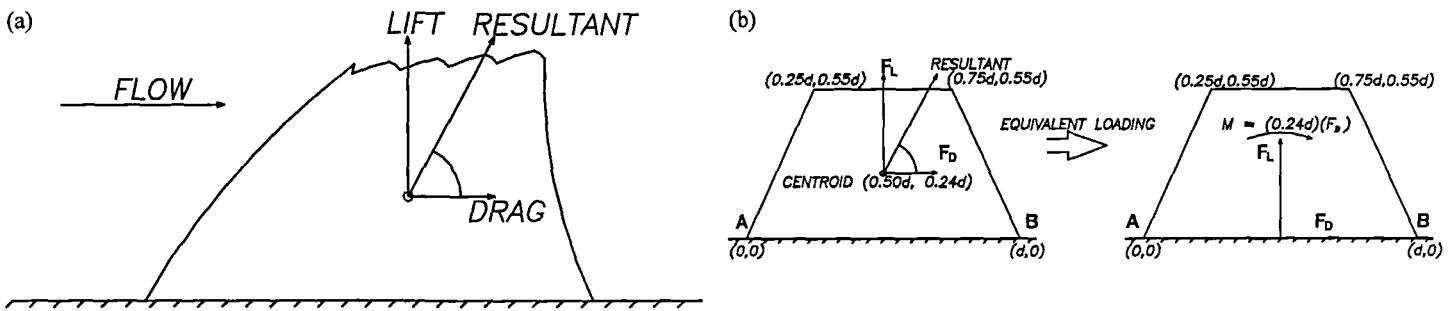

FIGURE 2 Hydrodynamic forces on a barnacle. (a) = schematic of a barnacle; (b) = model to predict stresses at the base.

the barnacle base plane, σ_{y_A}, can be expressed as follows:

$$\sigma_{y_A} = \frac{4F_L}{\pi d^2} + \frac{7.7F_D}{\pi d^2} \tag{5}$$

Substituting into Eqn 4, the shear stress along the barnacle base plane, τ_{xy}, can be written as:

$$\tau_{xy} = \frac{4F_D}{\pi d^2} \tag{6}$$

Assuming the failure occurs along the barnacle base plane, detachment can be predicted to occur at the flow velocity in which either the tensile or shear stress at point A exceeds the adhesion strength in tension or shear, respectively.

RESULTS AND DISCUSSION

The results and discussion are first presented with respect to the hydrodynamic measurements. These data are then applied to the prediction of fouling-release.

Hydrodynamic Measurements

Measurements of the lift and drag forces on the barnacles and the standard shapes at velocities from 0–4 m s^{-1} were made and analyzed for the three streamwise locations. Eqs 1 and 2 were used to calculate the coefficients of lift and drag from the force and velocity data. The Reynolds number, Re_d, was determined using Eqn 7.

$$Re_d = \frac{U_e d}{\nu} \tag{7}$$

where Re_d = Reynolds number based on object's characteristic length, d = diameter or characteristic length, ν = kinematic viscosity of the fluid.

The characteristic length used for the cube and the pyramid was the length of a base edge. The hydrodynamic measurements for the cube and the pyramid were made with the edge oriented perpendicular to the flow. The barnacles were tested with the major axis into the flow as depicted in Figure 2a.

Several trends were observed in the experimental results (Figure 3). First, there is generally a higher degree of variability in the results at lower

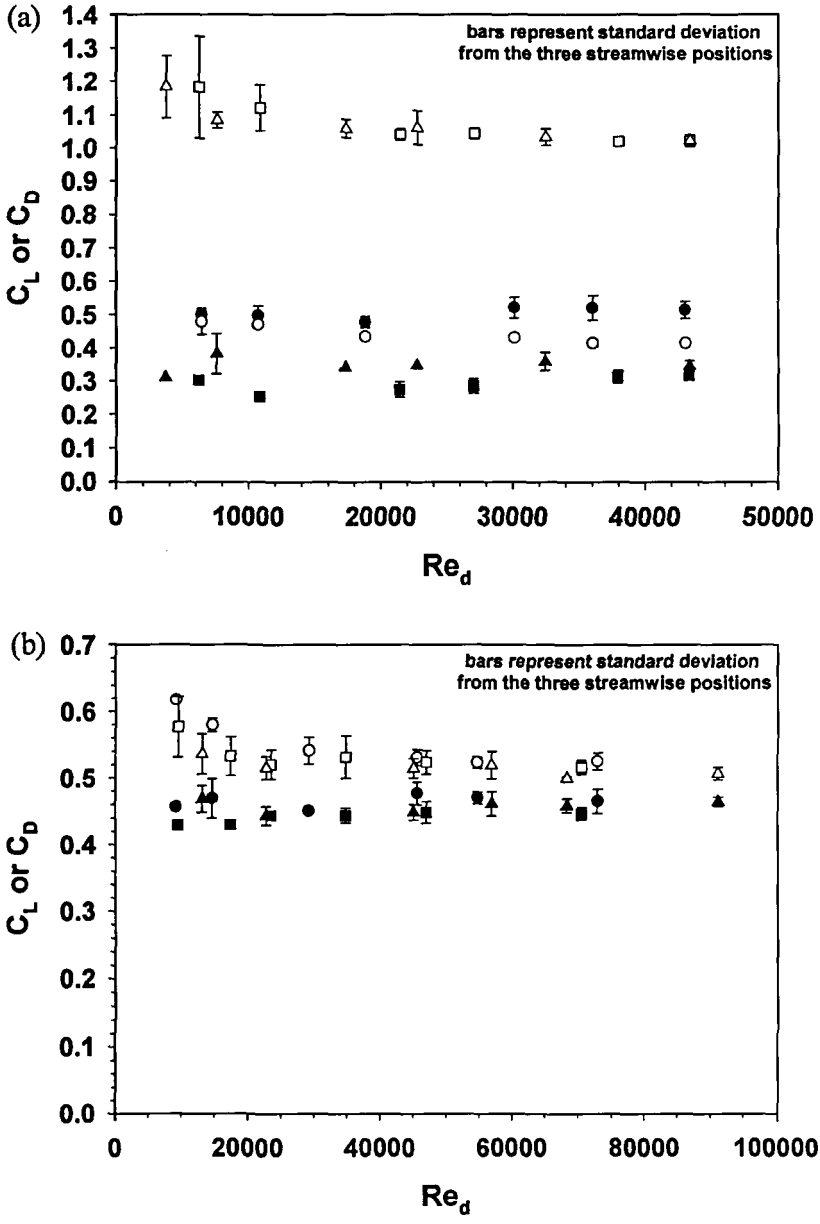

FIGURE 3 Force coefficients for (a) standard shapes, (b) barnacles. Key to symbols in (a): (●) = C_L hemisphere, (■) = C_L cube, (▲) = C_L pyramid, (○) = C_D hemisphere, (□) = C_D cube, (△) = C_D pyramid. Key to symbols in (b): (●) = C_L barnacle #1, (■) = C_L barnacle #2, (▲) = C_L barnacle#3, (○) = C_D barnacle #1, (□) = C_D barnacle #2, (△) = C_D barnacle #3.

Reynolds numbers. This is mainly due to the higher relative errors in the measurement of both force and velocity in the low range. There is also a trend of decreasing drag coefficient and nearly constant lift coefficient with increasing Reynolds number. The standard shapes served as controls to validate the measurement system and the experimental procedures. The drag coefficients for the standard shapes agree within their uncertainty with those found in previous investigations in which the shapes were oriented as in the present study (Table I). There were only slight differences in the lift and drag coefficients with downstream location for the shapes tested (*i.e.* there was little effect of boundary layer thickness). However, the relatively short development length did not allow a situation in which the specimen height was much less than the boundary layer thickness to be studied.

The lift and drag coefficients for the three barnacles tested agree within experimental uncertainty. The mean lift coefficient ranged from 0.43 to 0.48, and the drag coefficient ranged from 0.50 to 0.62 for the barnacles tested. Denny (1988) reports a drag coefficient of 0.5 for the acorn barnacles *Balanus glandula* and *Semibalanus cariosus* (at $Re_d = 10^5$), and provides the lift and drag coefficients for many other organisms.

Modeling of Barnacle Loading and Detachment

The stresses at the barnacle base due to the hydrodynamic forces were determined using Eqs 5 and 6 and the lift and drag coefficients measured on barnacles tested on the foil ($C_L = 0.45$ and $C_D = 0.52$). In this analysis, the coefficients are not considered to vary significantly with Reynolds number. With this, expressions for the tensile and shear stress can be stated in terms of the dynamic pressure, q.

$$\sigma_{y_A} = 0.98\left(\tfrac{1}{2}\rho U_e^2\right) = 0.98\,q \tag{8}$$

$$\tau_{xy} = 0.27\left(\tfrac{1}{2}\rho U_e^2\right) = 0.27\,q \tag{9}$$

TABLE I Comparison of force coefficients with previous studies

Shape	*Present results*			*Previous results*		
	C_L	C_D	Re_d	C_L	C_D	Re_d
Hemisphere	0.48–0.52	0.42–0.48	6.4×10^3 to 4.3×10^4	NA	0.40–0.50[a]	6.0×10^3 to 4.0×10^4
Cube	0.25–0.32	1.02–1.18	6.2×10^3 to 4.3×10^4	NA	1.05[b]	1.0×10^4 to 1.0×10^6
Pyramid	0.31–0.36	1.02–1.18	3.7×10^3 to 4.3×10^4	NA	1.14[b]	1.0×10^6

[a]Roberson and Crowe (1985); [b]Hoerner (1965); NA = not available

The model can be used to predict the maximum shear and tensile barnacle adhesion strength that would allow self-cleaning to occur at operational speeds. Figure 4 illustrates the variation in tensile and shear stresses with velocity calculated from Eqs 8 and 9. As an example, a vessel moving at $7.7\,\mathrm{m\,s^{-1}}$ (15 knots) produces a tensile stress of 29 kPa and a shear stress of 8 kPa on an attached barnacle. A barnacle with an adhesion strength less than the calculated stresses would be detached.

It must be remembered that barnacle detachment will not occur as readily in regions of the hull where the boundary layer is thick or where the flow has separated. But barnacles in these areas contribute less to the frictional resistance of a vessel than do barnacles near the bow. The ultimate performance of a fouling-release system can only be evaluated in full-scale trials. The results presented here, however, give an indication of the fouling-release properties required for a coating to hydrodynamically self-clean. In order to better address the efficacy of self-cleaning, experiments are presently being conducted to directly measure the force and monitor the removal of a variety of fouling organisms in natural communities on test panels (Kovach & Swain, 1998).

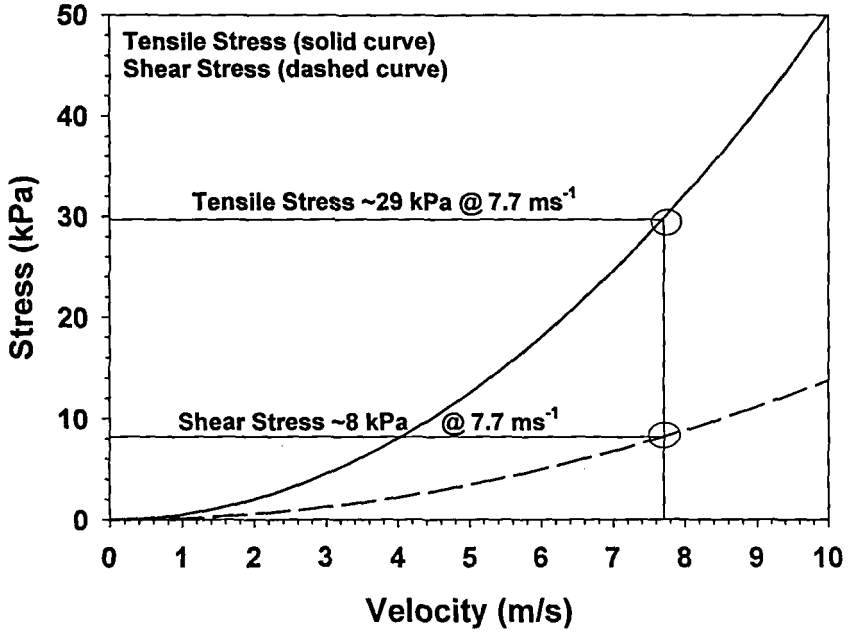

FIGURE 4 Velocity for barnacle detachment due to tensile and shear stresses.

In conclusion, the lift and drag coefficients (C_L and C_D) for barnacles were obtained from measurements on a barnacle mounted to a towed foil. C_L remained nearly constant over the range of Reynolds numbers tested, while C_D decreased slightly with increasing Reynolds number. The values of C_L and C_D were found be about 0.45 and 0.52, respectively, at $Re_d = 90{,}000$. An idealized model to predict the resulting stresses at the barnacle base was presented. Hydrodynamic experiments are ongoing with fouling communities composed of a variety of organisms to better address the efficacy of fouling-release surfaces.

Acknowledgements

The authors would like to thank the Office of Naval Research (grant # N00014-91-J-1465), the Defense Advanced Research Projects Agency, the Environmental Security and Technology Certification Program, and the General Electric Corporation for their support of this research and their commitment to the advancement of biofouling control.

References

Anon (1952) *Marine Fouling and its Prevention.* Woods Hole Oceanographic Institution. US Naval Institute, Annapolis, MD

Becka A, Loeb G (1984) Ease of removal of barnacles from various polymeric materials. *Biotechnol Bioeng* **26**: 1245–1251

Denny M W (1988) *Biology and Mechanics of the Wave-Swept Environment.* Princeton University Press, Princeton, NJ

Denny M (1995) Predicting physical disturbance: mechanistic approaches to the study of survivorship on wave-swept shores. *Ecol Monogr* **64**: 371–418

Denny M W, Daniel T L, Koehl M A R (1985) Mechanical limits to size in wave-swept organisms. *Ecol Monogr* **55**: 69–102

Griffith J R (1984) The fouling release concept: a viable alternative to toxic antifouling coatings? *Trans Imar E* **97**

Griffith J R, Bultman J D (1980) Fouling release coatings. *Nav Eng J* **129**: 129–132

Hoerner S F (1965) *Fluid-Dynamic Drag: Practical Information on Aerodynamic Drag and Hydrodynamic Resistance.* Hoerner Fluid Mechanics, Bricktown, NJ

Kovach B S, Swain G W (1998) A boat mounted foil to measure the drag properties of antifouling coatings applied to static immersion panels. *Proc Int Symp Seawater Drag Reduction,* Newport RI, July, pp 169–173

Lewthwaite J C, Molland A F, Thomas K W (1985) An investigation into the variation of ship skin frictional resistance with fouling. *Trans R Inst Nav Arch* **127**: 269–284

Roberson J A, Crowe C T (1985) *Engineering Fluid Mechanics.* Third Edition, Houghton Mifflin, Boston

Saunders H E (1957) *Hydrodynamics in Ship Design: Volume 2.* The Society of Naval Architects and Marine Engineers, New York

Schultz M P (1992) The measurement of hydrodynamic forces on fouling organisms. MS Thesis, Florida Institute of Technology

Swain G W (1998) Biofouling control: a critical component of drag reduction. *Proc Int Symp Seawater Drag Reduction,* Newport RI, July, pp 155–159

Swain G W, Schultz M P (1996) The testing and evaluation of non-toxic antifouling coatings. *Biofouling* **10**: 187–197

Swain G W, Griffith J R, Bultman J D, Vincent H L (1992) The use of barnacle adhesion measurements for the field evaluation of non-toxic foul release surfaces. *Biofouling* **6**: 105–114

Vogel S (1981) *Life in Moving Fluids*. Willard Grant Press, Boston

Yule A B, Walker G (1984) The adhesion of the barnacle, *Balanus balanoides*, to slate surfaces. *J Mar Biol Assoc* UK **64**: 429–439