REPRODUCED AT GOVERNMENT EXPENSE

# MKIII Gusher® Galley Pump
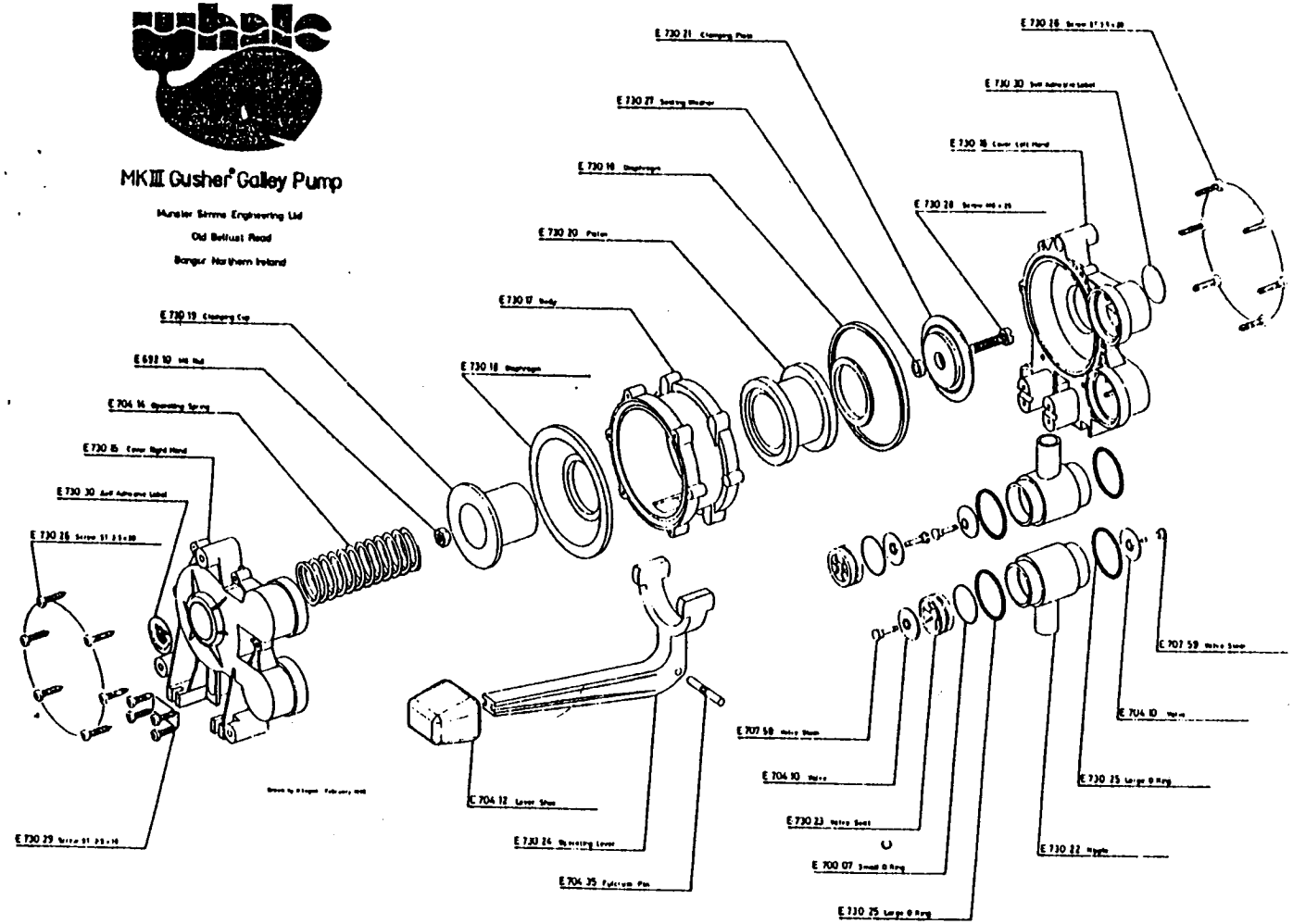
Munster Simms Engineering Ltd
Old Belfast Road
Bangor Northern Ireland