SEA 222 OPERATOR'S MANUAL

Featuring a unique "softouch" keypad, the SEA 222 is as easy to operate as a microwave oven. Just follow the directions in this booklet.

The "brain" of the SEA 222 is divided into two parts:

1. 290 factory programmed frequency pairs selectable by channel number from EPROM memory.
2. 100 channels of "scratch pad" memory for front panel programming and recall (Note: 10 of these channels are "EMERGENCY" channels).

When operating your SEA 222 please note:

1. Any two-digit key stroke followed by "enter" will recall user-programmed channels 10-99;
2. Any 3 and 4-digit key stroke followed by "enter" recalls factory programmed channels.

SEA®

A UNIT OF DATAMARINE INTERNATIONAL, INC.

FRONT PANEL CONTROLS:

DISPLAY:	The eight-digit alphanumeric display provides the operator with frequency and channel data.
4 x 4 KEYPAD	16 keys allow the operator to communicate with the computer which controls radio functions. For simple operation, an "operator friendly" software package is used in conjunction with the display. All of the keys are listed below.
ENT	Enters previously keyed data into the computer.
Number Keys	Keys numbered 0 through 9 enter required numerical data into the computer.
(Arrows) ▼▲	These keypads permit receiver tuning up or down in 100 Hz steps.
CH/FR	Allows the operator to display either channel number or the frequency of operation. Example: pressing this key when the display reads "CHAN 801" causes the display to indicate the receiver operating frequency assigned to channel number 801 (8718.9 KHz).
SQL	Activates or deactivates the voice operated squelch system. When the squelch is activated, the most significant digit in the display will contain the letter "Q."
EMER	Allows operator instant recall of programmed emergency channels.

TO PUT YOUR SEA 222 IN THE *OPERATING* MODE:

Turn the volume ON/OFF knob on. The display will read "SEA 222", then "2182.0."

After three minutes the radio is ready to operate on 2182.0 kHz (to comply with FCC standards).

TO DIM THE DISPLAY:

Press: any single digit followed by "ENT" ("0" being off and "9" being bright).

Example: "9", "ENT" (brightest display)
"0", "ENT" (extinguishes display)

Restore display to maximum brilliance by touching any keypad when display is extinguished.

TO TURN THE AUDIO FEEDBACK OFF/ON:

To turn off the beep, enter any even digit and the "ENT" key.

Example: Press "6", "ENT".

To turn the beep back on, enter any odd digit and the "ENT" key.

Example: Press "7", "ENT". Note: this modification only affects SEA 222's with serial number higher than X2724.

TO SELECT CHANNELS OR FREQUENCIES STORED IN THE FACTORY PROGRAMMED MEMORY OF THE SEA 222, FOLLOW THESE STEPS:

The factory programmed frequencies are listed on page 7 of this booklet. Access to these frequencies is explained on pages 3, 4, and 5.

To select a channel by number: Press the desired three or four digit channel number, then "ENT".

Example: Press "403", then press "ENT".
Display will read "CHAN 403". The SEA 222 is ready to operate on Channel 403.

TO DISPLAY THE FREQUENCY ASSIGNED TO A CHANNEL NUMBER:

Press: "CH/FR" keypad while your desired channel number is displayed.

Example: Press "CH/FR" keypad when the display reads "CHAN 403".
Display will indicate the receiver frequency 4363.6 KHz.
Press: "CH/FR" keypad again, display will revert back to "CHAN 403".

TO PROGRAM THE SEA 222 "SCRATCH PAD" MEMORY:

Press: 8888888 (seven 8's).

Display will read: "PROGRAM," then "BIN #?".

The SEA 222 is now in Program mode.

Press: Desired two digit bin number, then "ENT".

Example: Press "10", "ENT".
Display will read "TX FREQ".

Press: desired transmitter frequency (if programming receive only frequency, press "ENT").

Example: Press 124292, "ENT".
Display will read "A3A?".
Press: "1", then "ENT" for channels requiring -16dB carrier insertion (A3A is seldom required) **or** "ENT" for normal A3J (no carrier operation).
Display will read: "RX FREQ".

Press: "ENT" for simplex frequency, or your desired RECEIVER frequency for DUPLEX or receive only frequencies.

Example: For DUPLEX channel press: 1, 2, 3, 4, 5, 6, "ENT".
This will enter the frequency 12,345.6 KHz in the receiver frequency memory.
Display will read: "STORED".

The frequency is stored in BIN 10.
The radio is now ready to program the next location.
Display will flash "BIN#?".

Note: To program emergency channels, follow the previous steps, using a single digit number (0-9) instead of a two digit number, followed by "ENT".

TO REPROGRAM A CHANNEL:

To overwrite already programmed information:

Re-enter Program Mode (Press "8888888").

Press desired two digit BIN #, then "ENT".

Example: "10", "ENT".
Display will read "BIN FULL".

Press: **any** numeral key.

Example: Press "1".
Display will read "TX FREQ?".

Continue programming as explained in the section *TO PROGRAM THE SEA 222 "SCRATCH PAD" MEMORY.*

TO ERASE CHANNEL FREQUENCIES:

Enter the program mode and select the channel to be erased. The display will prompt "BIN FULL". Press any numeric key. The display will prompt "TX FREQ?", press "ENT". The display will prompt "RX FREQ?", press "ENT". The frequency information for that channel has been erased and the display will prompt "BIN#?".

TO ENTER SCAN MODE:

Channels 10-19 are reserved for scanning and you can program up to 10 channels using the program mode. To activate, turn radio off, then on to set coupler in neutral tuning mode (it may be necessary to reprogram squelch threshold for satisfactory operation). To start scanning, press "CH/FR", then "▲". Scanning stops on active channels and resumes when channel becomes inactive. To step over an unwanted active channel, press "▲". To stop scanning, press "EMER" (stops on present channel).

TO RECALL A FREQUENCY OR CHANNEL FROM SCRATCH PAD MEMORY:

Press desired two digit BIN #, "ENT".

Example: Press: "10", "ENT".
Display will read: the receive frequency stored in that bin, or "empty".
Then press: "CH/FR" keypad.
Display will read "CHAN 10".

(Note: Scratch pad memory must be programmed in the field.)

TO ADJUST THE SQUELCH THRESHOLD:

Put the SEA 222 into PROGRAM mode (see previous section *TO PROGRAM THE SEA 222 "SCRATCH PAD" MEMORY*). Display will read "PROGRAM", then "BIN#?".

Press: "SQL" button.

Display will read "SQ 0-9?" (4 is the factory set threshold).

Press: desired single digit between 0-9 and "ENT". ("0" is off and "9" is maximum.)

TO EXIT THE PROGRAM MODE:

Press: "EMER" **or**:

If no entry is made for 10 seconds after program entry, the system will automatically exit the Program Mode.

Display will read the last frequency programmed or "2182.0" if no frequency was previously programmed.

Press: "CH/FR".

Display will read channel number.

TO ENTER A RECEIVE ONLY FREQUENCY:

Exit the Program mode.

Press: desired five or six digit frequency between 2000.0 and 24000.0, then "ENT".

Example: Press "1,0,0,0,0,0" then "ENT".
The operating system will interpret this as a RECEIVE frequency of 10,000.0 kHz.

The transmitter is inhibited in this mode.

TO SELECT AN EMERGENCY CHANNEL:

Press any SINGLE DIGIT, then "EMER".

Example: Press "0", "EMER".
Display will read 2182.0.

(Note: Up to 10 emergency frequencies (0-9) may be stored in scratch pad memory.)

As already noted, CHANNEL 0 is loaded with 2182.0 kHz.

POINTS TO REMEMBER:

- It may help to read the comprehensive instructions in your SEA 222 Instruction and Maintenance Manual before attempting to operate your radio. The information in this booklet is a shortened version of those instructions, and assumes a certain level of familiarity with the equipment. For your convenience, keep this "how to" information and frequency listing in a handy place for quick reference on board your vessel.
- Let your SEA 222 warm up for at least three minutes. Transmitting before 3 minutes may result in a violation of FCC regulations.
- Confused? If at any time during the programming process, you are uncertain as to how to proceed, press "EMER" or just wait 10 seconds. At this point you may re-enter the Program Mode and try again.
- Any frequency between 2000.0 kHz and 24000.0 kHz may be selected for entry into the "scratch pad" memory. Before using them, remember they must be legally authorized for the desired operating service. Unauthorized use of frequencies could result in a citation by the FCC. When the SEA 222 is to be used in services other than the marine service, it is possible to provide a special program for the permanent memory. Contact the factory for information regarding special programming.

SEA 222 FREQUENCY PROGRAM

CHANNEL NUMBER	SHIP TRANSMIT FREQ.	SHIP RECEIVE	USE
201	2003	SIMPLEX	SHIP-TO-SHIP, GREAT LAKES
203	2006	SIMPLEX	ALASKA
209	2031.5	2490	WOM FT. LAUDERDALE
211	2054	SIMPLEX	BRITISH COLUMBIA WX
212	2065	SIMPLEX	SHIP-TO-SHIP
213	2079	SIMPLEX	SHIP-TO-SHIP
214	2082.5	SIMPLEX	SHIP-TO-SHIP ONLY
215	2086	SIMPLEX	SHIP-TO-SHIP, MISSISSIPPI RIVER LIMITED COAST
217	2093	SIMPLEX	SHIP-TO-SHIP ONLY–COMMERCIAL FISH
218	2096.5	SIMPLEX	SHIP-TO-SHIP SHIP TO LIMITED COAST STATION
219	2115	SIMPLEX	ALASKA
220	2118	SIMPLEX	ALASKA
221	2118	2514	WOM FT. LAUDERDALE WLC-ROGERS CITY WFU-P, HURON WBL-BUFFALO

S(222 FREQUENCY PROGRAM

CHANNEL NUMBER	SHIP TRANSMIT FREQ.	SHIP RECEIVE	USE
223	2131	2309	KODIAK
224	2134	2312	COLD BAY, CORDOVA, SITKA
			KQP, GALVESTON
228	2142	SIMPLEX	CA INTERSHIP
230	2158	2550	WFA, TAMPA BAY
			WLC, ROGERS CITY
			WBL, BUFFALO PJC, CURACAO
00	2182	SIMPLEX	DISTRESS CALLING
236	2203	SIMPLEX	SHIP-TO-SHIP GULF OF MEXICO
238	2206	2582	WLC, ROGERS CITY
			HALIFAX
239	2237	2397	ALASKA KETCHIKAN
240	2240	2400	ALASKA JUNEAU, NOME
242	2366	2450	WOO NEW JERSEY
245	2390	2566	WOM FT. LAUDERDALE
248	2406	2506	WOM FT. LAUDERDALE
			KMI OAKLAND
249	2419	SIMPLEX	ALASKA
250	2422	SIMPLEX	ALASKA
251	2427	SIMPLEX	ALASKA
252	2430	2572	WLO MOBILE
254	2430	SIMPLEX	ALASKA
255	2447	SIMPLEX	ALASKA
256	2450	SIMPLEX	ALASKA
257	2458	2506	KGN, DELCAMBRE
258	2479	SIMPLEX	ALASKA
259	2482	SIMPLEX	ALASKA
261	2506	SIMPLEX	ALASKA
262	2509	SIMPLEX	ALASKA
263	2512	SIMPLEX	ALASKA
266	2535	SIMPLEX	ALASKA
267	2538	SIMPLEX	ALASKA
268	2563	SIMPLEX	ALASKA
269	2566	SIMPLEX	ALASKA
273	2616	SIMPLEX	ALASKA
275	2638	SIMPLEX	SHIP-TO-SHIP
277	2670	SIMPLEX	USCG WORKING
280	2738	SIMPLEX	SHIP-TO-SHIP
			ALL EXCEPT GREAT LAKES AND GULF
282	2830	SIMPLEX	SHIP-TO-SHIP, GULF ONLY
301	3023	SIMPLEX	AERONAUTICAL ENROUTE
303	3201	SIMPLEX	ALASKA POINT-TO-POINT
304	3258	SIMPLEX	ALASKA
305	3261	SIMPLEX	ALASKA
306	3449	SIMPLEX	ALASKA AERO
451	4125	SIMPLEX	4A LTD COAST/INTERSHIP

SEA 222 FREQUENCY PROGI A

CHANNEL NUMBER	SHIP TRANSMIT FREQ.	SHIP RECEIVE	USE
452	4143.6	SIMPLEX	4B LTD COAST/INTERSHIP
453	4419.4	SIMPLEX	4C LTD COAST/INTERSHIP
454	4366.7	SIMPLEX	ALASKA
455	4369.8	SIMPLEX	ALASKA
458	4397.7	SIMPLEX	ALASKA
459	4403.9	SIMPLEX	ALASKA
461	4422.5	SIMPLEX	ALASKA
462	4425.6	SIMPLEX	ALASKA
464	5472	SIMPLEX	ALASKA AERO
465	5490	SIMPLEX	ALASKA AERO
501	5164.5	SIMPLEX	ALASKA PUBLIC FIXED
502	5167.5	SIMPLEX	ALASKA EMERGENCY/CALLING
503	5680	SIMPLEX	AERO SEARCH/RESCUE
651	6218.6	SIMPLEX	6A LTD COAST/INTERSHIP
652	6221.6	SIMPLEX	6B LTD COAST/INTERSHIP
653	6521.9	SIMPLEX	6C LTD COAST/INTERSHIP
851	8291.1	SIMPLEX	8A LTD COAST/INTERSHIP
852	8294.2	SIMPLEX	8B LTD COAST/INTERSHIP
1251	12429.2	SIMPLEX	12A LTD COAST/INTERSHIP
1252	12432.3	SIMPLEX	12B LTD COAST/INTERSHIP
1253	12435.4	SIMPLEX	12C LTD COAST/INTERSHIP
1651	16587.1	SIMPLEX	16A LTD COAST/INTERSHIP
1652	16590.2	SIMPLEX	16B LTD COAST/INTERSHIP
1653	16593.3	SIMPLEX	16C LTD COAST/INTERSHIP
2251	22124	SIMPLEX	22A LTD COAST/INTERSHIP
2252	22127.1	SIMPLEX	22B LTD COAST/INTERSHIP
2253	22130.2	SIMPLEX	22C LTD COAST/INTERSHIP
2254	22130.3	SIMPLEX	22D LTD COAST/INTERSHIP
2255	22136.4	SIMPLEX	22E LTD COAST/INTERSHIP

S 222 FREQUENCY PROGRAM ITU CHANNELS

4 MHZ BAND

STATION	CHANNEL	SHIP TRANSMIT	SHIP RECEIVE
KMI	401	4063.0	4357.4
	402	4066.1	4360.5
WOM	403	4069.2	4363.6
	404	4072.3	4366.7
WLO	405	4075.4	4369.8
	406	4078.5	4372.9
	407	4081.6	4376.0
	408	4084.7	4379.1
	409	4087.8	4382.2
WOO	410	4090.9	4385.3
WOO	411	4094.0	4388.4
WOM	412	4097.1	4391.5
	413	4100.2	4394.6
WLO	414	4103.3	4397.7
	415	4106.4	4400.8
WOO, KMI	416	4109.5	4403.9
WOM, KMI	417	4112.6	4407.0
	418	4115.7	4410.1
WLO	419	4118.8	4413.2
	420	4121.9	4416.3
	421	4125.0	4419.4
WOO	422	4128.1	4422.5
WOM	423	4131.2	4425.6
COAST GUARD	424	4134.3	4428.7
	425	4137.4	4431.8
	426	4140.5	4434.9
	451	4125.0	SIMPLEX
	452	4143.6	SIMPLEX
	453	4419.4	SIMPLEX

6 MHZ BAND

COAST GUARD	CHANNEL	SHIP TRANSMIT	SHIP RECEIVE
	601	6200.0	6506.4
	602	6203.1	6509.5
	603	6206.2	6512.6
	604	6209.3	6515.7
	605	6212.4	6518.8
	606	6215.5	6521.9
	651	6218.6	SIMPLEX
	652	6221.6	SIMPLEX
	653	6521.9	SIMPLEX

SEA 222 FREQUENCY PROG M ITU CHANNELS

8 MHZ BAND

STATION	CHANNEL	SHIP TRANSMIT	SHIP RECEIVE
	801	8195.0	8718.9
WOM	802	8198.1	8722.0
	803	8201.2	8725.1
KMI	804	8204.3	8728.2
WOM	805	8207.4	8731.3
	806	8210.5	8734.4
	807	8213.6	8737.5
WOO	808	8216.7	8740.6
KMI	809	8219.8	8743.7
WOM	810	8222.9	8746.8
WOO	811	8226.0	8749.9
	812	8229.1	8753.0
	813	8232.2	8756.1
WOM	814	8235.3	8759.2
WOO	815	8238.4	8762.3
COAST GUARD	816	8241.5	8765.4
	817	8244.6	8768.5
	818	8247.7	8771.6
	819	8250.8	8774.7
	820	8253.9	8777.8
	821	8257.0	8780.9
KMI	822	8260.1	8784.0
	823	8263.2	8787.1
WLO	824	8266.3	8790.2
WOM	825	8269.4	8793.3
WOO	826	8272.5	8796.4
	827	8275.6	8799.5
	828	8278.7	8802.6
WLO	829	8281.8	8805.7
WLO	830	8284.9	8808.8
WOM	831	8288.0	8811.9
	851	8291.1	SIMPLEX
	852	8294.2	SIMPLEX

HIGH SEAS STATIONS

KMI	POINT REYES, CA
WLO	MOBILE, AL
WOM	FT. LAUDERDALE, FL
WOO	MANAHAWKIN, NJ

SEA 222 FREQUENCY PROGRAM
ITU CHANNELS

12 MHZ BAND

STATION	CHANNEL	SHIP TRANSMIT	SHIP RECEIVE
KMI	1201	12330.0	13100.8
KMI	1202	12333.1	13103.9
WOO, KMI	1203	12336.2	13107.0
	1204	12339.3	13110.1
COAST GUARD	1205	12342.4	13113.2
WOM	1206	12345.5	13116.3
	1207	12348.6	13119.4
WOM	1208	12351.7	13122.5
WOM	1209	12354.8	13125.6
WOO	1210	12357.9	13128.7
WOO	1211	12361.0	13131.8
WLO	1212	12364.1	13134.9
	1213	12367.2	13138.0
	1214	12370.3	13141.1
WOM	1215	12373.4	13144.2
	1216	12376.5	13147.3
	1217	12379.6	13150.4
	1218	12382.7	13153.5
	1219	12385.8	13156.6
	1220	12388.9	13159.7
	1221	12392.0	13162.8
	1222	12395.1	13165.9
WOM	1223	12398.2	13169.0
	1224	12401.3	13172.1
	1225	12404.4	13175.2
WLO	1226	12407.5	13178.3
	1227	12410.6	13181.4
WOO	1228	12413.7	13184.5
KMI	1229	12416.8	13187.6
WOM	1230	12419.9	13190.7
	1231	12423.0	13193.8
	1232	12426.1	13196.9
	1251	12429.2	SIMPLEX
	1252	12432.3	SIMPLEX
	1253	12435.4	SIMPLEX

HIGH SEAS STATIONS

KMI	POINT REYES, CA
WLO	MOBILE, AL
WOM	FT. LAUDERDALE, FL
WOO	MANAHAWKIN, NJ

SEA 222 FREQUENCY PROGRAM
ITU CHANNELS

16 MHZ BAND

STATION	CHANNEL	SHIP TRANSMIT	SHIP RECEIVE
WOM	1601	16460.0	17232.9
KMI	1602	16463.1	17236.0
KMI	1603	16466.2	17239.1
	1604	16469.3	17242.2
WOO	1605	16472.4	17245.3
	1606	16475.5	17248.4
	1607	16478.6	17251.5
	1608	16481.7	17254.6
WOM	1609	16484.8	17257.7
WOM	1610	16487.9	17260.8
WOM	1611	16491.0	17263.9
	1612	16494.1	17267.0
	1613	16497.2	17270.1
	1614	16500.3	17273.2
	1615	16503.4	17276.3
WOM	1616	16506.5	17279.4
	1617	16509.6	17282.5
	1618	16512.7	17285.6
	1619	16515.8	17288.7
WOO	1620	16518.9	17291.8
	1621	16522.0	17294.9
	1622	16525.1	17298.0
	1623	16528.2	17301.1
KMI	1624	16531.3	17304.2
COAST GUARD	1625	16534.4	17307.3
WOO	1626	16537.5	17310.4
	1627	16540.6	17313.5
	1628	16543.7	17316.6
	1629	16546.8	17319.7
	1630	16549.9	17322.8
WOO	1631	16553.0	17325.9
	1632	16556.1	17329.0
	1633	16559.2	17332.1
	1634	16562.3	17335.2
	1635	16565.4	17338.3
	1636	16568.5	17341.4
	1637	16571.6	17344.5
	1638	16574.7	17347.6
	1639	16577.8	17350.7
	1640	16580.9	17353.8
WLO	1641	16584.0	17356.9
	1651	16587.1	SIMPLEX
	1652	16590.2	SIMPLEX
	1653	16593.3	SIMPLEX

222 FREQUENCY PROGRAM ITU CHANNELS

22 MHZ BAND

STATION	CHANNEL	SHIP TRANSMIT	SHIP RECEIVE
WOO	2201	22000.0	22596.0
	2202	22003.1	22599.1
	2203	22006.2	22602.2
	2204	22009.3	22605.3
WOO	2205	22012.4	22608.4
	2206	22015.5	22611.5
	2207	22018.6	22614.6
	2208	22021.7	22617.7
	2209	22024.8	22620.8
WOO	2210	22027.9	22623.9
	2211	22031.0	22627.0
	2212	22034.1	22630.1
	2213	22037.2	22633.2
KMI	2214	22040.3	22636.3
WOM	2215	22043.4	22639.4
WOM	2216	22046.5	22642.5
	2217	22049.6	22645.6
	2218	22052.7	22648.7
	2219	22055.8	22651.8
	2220	22058.9	22654.9
	2221	22062.0	22658.0
WOM	2222	22065.1	22661.1
KMI	2223	22068.2	22664.2
	2224	22071.3	22667.3
	2225	22074.4	22670.4
	2226	22077.5	22673.5
	2227	22080.6	22676.6
KMI	2228	22083.7	22679.7
	2229	22086.8	22682.8
	2230	22089.9	22685.9
	2231	22093.0	22689.0
	2232	22096.1	22692.1
	2233	22099.2	22695.2
	2234	22102.3	22698.3
	2235	22105.4	22701.4
WOO, KMI	2236	22108.5	22704.5
WLO	2237	22111.6	22707.6
	2238	22114.7	22710.7
	2239	22117.8	22713.8
	2240	22120.9	22716.9
	2251	22124.0	SIMPLEX
	2252	22127.1	SIMPLEX
	2253	22130.2	SIMPLEX
	2254	22133.3	SIMPLEX
	2255	22136.4	SIMPLEX

"SCRATCH PAD" MEMORY CHANNEL/FREQUENCY LOG

Use this handy log to keep a record of the frequencies you store in "scratch pad" memory.

Location	Ship TX	Ship RX	Use
E0	2182.0	2182.0	Emergency Channel
E1			
E2			
E3			
E4			
E5			
E6			
E7			
E8			
E9			
10			
11			
12			
13			
14			
15			
16			
17			
18			
19			
20			
21			
22			
23			
24			

Tech Man

1. GENERAL INFORMATION

1.1 DESCRIPTION

The SEA 222 is a compact, all solid-state, 150 Watt PEP, HF SSB transceiver for the marine and HF radio service.

The SEA 222 covers the 2 to 23 MHz frequency range with channel restrictions which are determined only by the rules regarding the appropriate radio service. That is, the SEA 222 is equipped with a "mask" which limits the transmitter operation to legally assigned channels for the desired service. The frequency "mask" contains ALL normally assigned (ITU) Marine channels and has space available for any additional channels which might be desired.

The SEA 222 is fully synthesized with 100 Hz resolution and the channel frequencies are controlled by a precision crystal housed in a temperature stabilized holder. The transceiver is designed to operate from a 13.6 Volt, negative ground power system and is controlled by a front panel mounted 4x4 keypad. The control computer operating system makes use of an "operator friendly" controller program in conjunction with the eight character alphanumeric VF (vacuum fluorescent) display.

1.2 EQUIPMENT FURNISHED

1.2.1 SEA 222 Radiotelephone

1.2.2 Microphone and Microphone Clip

1.2.3 Mounting Bracket

1.2.4 Power Connector

1.2.5 Instruction/Maintenance Manual

1.2.6 Frequency Allocation Booklet

1.3 MECHANICAL INFORMATION

Size	13.9"W x 4.6"H x 12.5"D
Weight	13 lbs. (5.9 Kilograms)
Mounting Positions	Any Orientation

1.4 ELECTRICAL SPECIFICATIONS

1.4.1 GENERAL

Type Acceptance	FCC Parts 81, 83, 87, 90
Frequency Range	2-23 MHZ
Circuitry	Double Conversion, 45 MHz 1st I.F., 6.4 MHz 2nd I.F.
Front Panel Controls	Volume ON/OFF, 4x4 Keypad
Channel Capacity	290 channels in factory programmed memory, 100 channels in field programmed memory
Operating Temperature Range	-30 degrees to + 60 degrees C
Frequency Stability	15 Hz
Operating Modes	A3A, A3J, 2182.0 KHz A3H in EO
Primary Voltage	13.6 DC ±15%, negative ground
Current Drain:	
Receive Standby	2A
Receive, Full Audio	2.5A
Transmit, Average Voice	11A
Transmit, Two Tone	17A
RF Impedance	50 Ohms

1.4.2 TRANSMITTER

Power Output	A3A, A3J, 150 Watts PEP
Intermodulation	-32 dB below PEP
Spurious Emissions	-65 dB below PEP
Carrier Suppression	-46 dB below PEP
Undesired Sideband Suppression	-50 dB below PEP @ 1000 Hz
Audio Response	300 Hz to 2400 Hz ± 3 dB

1.4.3 RECEIVER

Sensitivity: SSB	1 microvolt for 12 dB SINAD
Selectivity: SSB	300 Hz to 2400 Hz ± 6 dB
AGC	Less than 10 dB audio level change from 10 uV to 100 mV, fast attack slow release
Intermodulation	At least -80 dB
Spurious Responses	At least -60 dB
Audio Power	4 Watts at less that 10% distortion

2. OPERATION

2.1 WARM-UP CAUTION

Do not attempt to transmit until the radiotelephone is warmed up for at least 3 minutes. Transmitting before the 3 minute warm-up period has elapsed can cause a violation of FCC regulations.

2.2 FCC REQUIREMENTS

"How to Correctly Operate Your Radiotelephone Set" is a booklet available from the Radio Technical Commission for Marine Service (RTCM), P.O. Box 19087, Washington, D.C. 20036 and is highly recommended reading material.

2.3 FRONT PANEL CONTROLS AND INDICATORS

Figure 2.3 illustrates the front panel of the SEA 222. The function of these controls is as follows:

Volume ON/OFF : This control adjusts the loudness of the receiver and turns the set on and off. To turn the set ON, turn the Volume ON/OFF control knob CLOCKWISE until a click is heard. Turning the control knob further clockwise will increase the receiver volume level.

TRANS Indicator: This LED indicates (when lit) that the transmitter is activated. Under zero modulation conditions, the LED is dim, brightening under modulation to indicate proper voice output.

FIGURE 2.3

SEA 222 FRONT PANEL

THE 8 DIGIT ALPHANUMERIC DISPLAY: The alphanumeric VF display in the SEA 222 is designed to provide the operator with such things as frequency and/or channel data, operator prompting and some specialized data outputs.

THE 4x4 KEYPAD: The 16 keyswitches provided on the SEA 222 allow the operator to communicate with the computer which controls the many functions in the radiotelephone. In order to simplify the operation of the SEA 222, an "operator friendly" software package has been designed which is used in conjunction with the alphanumeric display. All of the keys and the function of each are listed below:

CH/FR: This key allows the operator to display either the channel number or the frequency of operation. Pressing this key when the display reads "CHAN 801" for example, will cause the display to indicate the receiver operating frequency which is assigned to channel number 801. Pressing the microphone push to talk switch will change the display to read the transmitter frequency assigned to channel number 801. Pressing the CH/FR key again will restore the channel number.

ENT: This key allows the operator to enter a previously keyed data word into the computer. See examples in ¶ 2.5 "OPERATING YOUR SEA 222 HF/SSB RADIOTELEPHONE".

SQL: This key activates or de-activates the voice operated SQUELCH system in the SEA 222. When the squelch is activated, the MOST SIGNIFICANT digit in the display will contain the letter "Q". When the squelch is de-activated, this display digit will remain blank. The operation of the SQL key will "toggle" the squelch status on and off.

EMER: This key allows one keystroke recall of the international distress frequency, 2182.0 KHz. It also allows the recall of up to 9 other preprogrammed frequencies. See ¶ 2.5 "OPERATING YOUR SEA 222 HF/SSB RADIOTELEPHONE.

UP and DOWN ARROWS: These keys control the RECEIVER frequency in 100 Hz increments. Pressing the UP arrow will cause the frequency to move UP in 100 Hz increments while pressing the DOWN arrow reverses the direction of tuning. Clarity tuning range is limited to ± 200 Hz on programmed channels, while "Rx ONLY" channels have unlimited clarity tuning range.

NUMBER KEYS 0 THROUGH 9: These keys allow the operator to enter the required numerical data into the computer. Note that it is necessary to understand the operating system in the computer in order to intelligently enter data. See ¶ 2.5 "OPERATING YOUR SEA 222 HF/SSB RADIOTELEPHONE" for details.

2.4 PROPAGATION

Hf signals do propagate far beyond the horizon. MF frequencies (2-3 MHz) are generally usable within 300 miles depending on the time of day, atmospheric conditions and man-made noise level.

The High Seas frequencies (4, 6, 8, 12, 16, and 22 MHz) allow communications over thousands of miles, again subject to the above mentioned limitations. Interference tends to be more of a problem than on VHF.

2.5 OPERATING YOUR SEA 222 HF/SSB RADIOTELEPHONE

2.5.1 DESCRIPTION OF MEMORY FUNCTIONS

The SEA has TWO memory banks. First, the factory programmed frequency "mask" which contains 290 frequency PAIRS, stored and recalled by CHANNEL NUMBER. Second, the internal "scratchpad" memory with allows the operator to program and recall 100 frequency pairs. See ¶ 3.4 for ITU channel listing. (NOTE: 10 of the 100 field programmable channels are "EMERGENCY" channels.)

2.5.2 PUTTING THE SEA 222 IN THE OPERATING MODE

Turn the Volume ON/OFF knob CLOCKWISE until the radio is activated. When the display indicates "2182.0", the radiotelephone has properly initialized and is set up to operate on 2182.0 KHz in the A3H mode. Wait 3 minutes for the synthesizer frequency to stabilize and the SEA 222 is ready to operate on 2182.0 KHz.

2.5.3 DIMMING THE DISPLAY

Enter any desired SINGLE digit number, followed by the "ENT" command. The single digit command will be interpreted by the operating system as a level of intensity with 0 being display OFF and 9 being maximum display brightness. Note that when the display is extinguished, the first stroke on ANY key will restore the display to maximum brightness.

TURNING THE AUDIO FEEDBACK OFF/ON

To turn off the beep, enter any even digit and the "ENT" keypad. Example: Press "6", then "ENT". To turn the beep back on enter any odd digit and the "ENT" keypad. Example: Press "6", then "ENT". Note: this modification only affects SEA 222's with serial numbers higher than X2724.

2.5.4 SELECTING A FREQUENCY FROM SCRATCHPAD MEMORY

Enter any desired TWO digit number, followed by the "ENT" command. The two digit command will be interpreted by the operating system as

the number of the desired "BIN" location in scratchpad memory. Note that the scratchpad memory must be programmed in the field.

2.5.5 SELECTING A CHANNEL BY NUMBER

Enter any desired THREE or FOUR digit channel number, followed by the "ENT" command. Example: "4, 0, 3, ENT". Verify that the radio has responded by examining the display which should read: "CH 403". Refer to ¶ 3.4 and/or your Frequency Allocation Booklet for channel Vs frequency data.

2.5.6 ENTERING A RECEIVE ONLY FREQUENCY

Enter any desired FIVE or SIX digit frequency between 2000.0 and 23000.0, followed by the "ENT" command. Example: "1, 0, 0, 0, 0, 0, ENT". This will be interpreted by the operating system as a RECEIVE frequency of 10,000.0 KHz.

2.5.7 SELECTING AN EMERGENCY CHANNEL

Up to 10 emergency frequencies may be stored in the scratchpad memory of the SEA 222. As already noted, CHANNEL 0 is loaded with 2182.0 KHz, A3H mode. Emergency channel 1 will normally be loaded with 2182.0 KHz, A3J mode. Any of the emergency channels may be recalled from memory by entering ANY SINGLE DIGIT followed immediately by the "EMER" command.

2.5.8 ACTIVATING THE SQUELCH FUNCTION

The squelch function in the SEA 222 is activated by pressing the "SQL" key on the 4x4 keypad. When the squelch system is activated, the MOST SIGNIFICANT (leftmost) digit in the VF display will show the letter "Q". Pressing the "SQL" key a second time will de-activate the squelch function and the "Q" flag will extinguish.

The SEA 222 squelch system makes use of a software analogue of the "voice operated" squelch used in previous SEA products. It is sensitive to the changing frequency components in the human voice and therefore requires no level control. A momentary tone will open the squelch but will not hold it open. A moving tone is required to hold the squelch open. When power is initially applied to the SEA 222, the squelch circuitry will be DE-ACTIVATED.

2.5.9 ACTIVATING THE "TUNED" INDICATOR

The SECOND MOST SIGNIFICANT digit in the VF display, is reserved for the antenna coupler "tuned status" digit blank. When an antenna coupler such as the SEA 1612 is used, the "TND" line from the coupler should be connected to the "TND" port on the accessory plug on the SEA

222 rear panel. The antenna coupler will signal that it has successfully tuned the antenna by pulling the "TND" line low. This will activate the "TUNED" indicator on the VF display. This indicator is an asterisk (*) in the SECOND MOST SIGNIFICANT digit of the VF display. Once activated, the "TUNED" indicator will remain lit UNTIL A FREQUENCY CHANGE TAKES PLACE. At that time the indicator will extinguish, since a properly tuned antenna is no longer assured. Once extinguished, the "TND" line must again be pulled low to activate the indicator.

2.6 OPERATING THE TRANSMITTER

The operation of the transmitter is straightforward. Pressing the microphone push-to-talk button will switch the transmitter circuits on. This will be indicated by the VF display changing to the transmitter frequency and the "TRANS" indicator will light dimly. Speak in a normal voice with your lips approximately one inch from the microphone. Do NOT shout into the microphone as this may reduce the intelligibility of the transmission. The "TRANS" indicator should modulate with the voice, indicating normal power output. Note that acknowledgment of a message cannot be done by keying the microphone, since no signal is transmitted until the operator actually speaks.

If the SEA 222 is fitted with an antenna coupler such as the SEA 1612, the "antenna tuned" status flag from the coupler will cause the SECOND MOST SIGNIFICANT digit in the VF display to indicate as asterisk (*) when the coupler has properly tuned the antenna system. (See ¶ 2.5.9.)

3. PROGRAMMING

3.1 FREQUENCY AND MODE SELECTION

As discussed above, the SEA 222 contains TWO memory systems. The factory programmed frequencies are listed in ¶ 3.4 and are stored in the operating system ROM. Normal access to these frequencies is through the channel number system described above. (See ¶ 2.5.5.) In addition to those frequencies contained in the factory programmed memory, the operator may program up to 100 frequency pairs into the non-volatile EEPROM memory referred to as "scratchpad" memory. This memory is arranged as 100 "bins" or locations and each bin is designed to hold one channel. A channel consists of TWO frequencies, a TRANSMITTER frequency and a RECEIVER frequency.

The frequencies selected for entry into the scratchpad memory must be legally authorized for the desired operating service.

When the SEA 222 is to be used in services other than the Marine Service, it is possible to provide a special program "mask" for the permanent memory. Contact the Factory for information.

3.2 BANDWIDTH LIMITATIONS

The only limitations imposed by the SEA 222 is that the desired frequency be inside the operating range of the equipment. Totally unrelated duplex pairs might be employed, since the computer controls the filter bandswitching. In practice, the antenna system will have a great deal to do with dictating the maximum allowable frequency separation. If a wide bandwidth antenna system such as a Conical Monopole is used, it is conceivable that the transmitter could operate in the 22 MHz band while the receiver was operating on 2000.0 KHz. If the companion SEA 1612 automatic antenna coupler is used in conjunction with the normal short whip, the allowable 2 MHz split may be reduced to a few hundred KHz.

3.3 FIELD PROGRAMMING THE SEA 222 SCRATCHPAD MEMORY

3.3.1 ENTERING THE PROGRAM MODE

The SEA 222 is forced into the PROGRAM mode by entering the number 8888888 (seven # 8s). The operating system should signal the operator that the SEA 222 has shifted to the PROGRAM mode by flashing "PROGRAM" on the VF display. After a short delay, the operating system will signal the operator to proceed by prompting "BIN # ?".

3.3.2 ENTERING SCRATCHPAD FREQUENCY AND MODE DATA

After the SEA 222 has shifted to the PROGRAM mode, the operator should select and enter the desired BIN number, such as BIN 10. This would be done by keying in the sequence "1, 0, ENT". If the selected bin location is full, the operating system will respond with the prompt "BIN FULL". This prompt will be held for approximately 2 seconds. If it is desired to "overwrite" the bin location with new data, simply hit the "EMER" key or any NUMBER key during the 2 second hold. If the operator does NOT make an entry at this time, the operating system will assume that the data in the chosen bin location is to be saved and will again prompt "BIN # ?". This will allow the operator to chose another bin location number.

Once the desired bin location is selected, the operating system will prompt "TX FREQ". The operator should then enter the desired TRANSMITTER frequency down to and including the 100 Hz increment. EXAMPLE: 1, 2, 4, 2, 9, 2, ENT. This will enter the frequency of

12,429.2 KHz in the transmitter frequency memory. At this time, the operating system will prompt "A3A ?". If the channel requires -16 dB carrier insertion the operator enters the numeral "1". If normal A3J (no carrier) operation is required, the operator simply hits the "ENT" key.

Following the mode selection sequence, the operating system will prompt "RX FREQ". If the channel being programmed is a SIMPLEX channel it is only necessary to hit "ENT" once more. This will put the previously programmed TRANSMITTER frequency into the RECEIVER storage location. If the channel being programmed is a DUPLEX channel, it will be necessary to enter the desired RECEIVER frequency. EXAMPLE: 1, 2, 3, 4, 5, 6, ENT. This will enter the frequency of 12,345.6 KHz in the receiver frequency memory. At this time, the bin location has been fully programmed, so the operating system will indicate this by prompting "BIN 10" (held for one second) "STORED" (held for one second). The operating system will then be ready to program the next location and will signal the operator by again prompting "BIN # ?".

3.3.3 ADJUSTING THE SQUELCH THRESHOLD

The software SINAD squelch in the SEA 222 has an adjustable threshold which may be reset in the field to compensate for varying levels of noise interference. Normally this level is set at the factory for proper operation under typical field conditions. Should it be desired to alter the squelch level, proceed as follows:

Force the SEA 222 into the PROGRAM mode (See ¶ 3.3.1) and when the operating system promts "BIN # ?", the operator should hit the "SQL" key. The operating system will then prompt "SQ 0-9 ?" At this time the operator can enter any SINGLE number between 0 and 9 by entering the desired number followed by the "ENT" key. Number 0 corresponds to a very LOW squelch threshold, while number 9 corresponds to a very HIGH squelch threshold. Normally a setting of from 4-6 will suit most installations.

3.3.4 EXITING THE PROGRAM MODE

If, after a program entry sequence, no further entries are made for a period of 10 seconds, the operating system will exit the PROGRAM mode and come up on the LAST channel entered while in the PROGRAM mode. If NO entry has been made while in the PROGRAM mode, the system will revert to EMER 0. Further, it is possible to exit the PROGRAM mode immediately by pressing "EMER". Operation will abort to EMER 0. PROGRAM mode will also be exited by cycling the main power switch OFF. When the system comes up it will be back in the normal operating mode.

3.4 SEA 222 FREQUENCY MASK

CHANNEL NUMBER	SHIP TRANSMIT FREQ.	SHIP RECEIVE	USE
201	2003	SIMPLEX	Ship-to-Ship, Great Lakes
203	2006	SIMPLEX	Alaska
205	2009	2446	WFA, Tampa + Scheduled Weather
206	2009	2506	WAH, St. Thomas
208	2030	SIMPLEX	Virgin Is. Intership
209	2031.5	2490	WOM Ft. Lauderdale
211	2054	SIMPLEX	British Columbia WX
212	2065	SIMPLEX	Ship-to-Ship
213	2079	SIMPLEX	Ship-to-Ship
214	2082.5	SIMPLEX	Ship-to-Ship Only
215	2086	SIMPLEX	Ship-to-Ship, Mississippi River Limited Coast
216	2086	2585	KRV, Ponce Playa
217	2093	SIMPLEX	Ship-to-Ship Only-Commercial Fish
218	2096.5	SIMPLEX	Ship-to-Ship Ship to Limited Coast Station
219	2115	SIMPLEX	Alaska
220	2118	SIMPLEX	Alaska
221	2118	2514	WOM Ft. Lauderdale WLC-Rogers City WEU-P, Huron WRL-Buffalo
223	2131	2309	Kodiak
224	2134	2312	Cold Bay, Cordova, Sitka KOP, Galveston
226	2134	SIMPLEX	Eastern Canada Intership
227	2142	2538	KCC, Corpus Christi
228	2142	SIMPLEX	CA Intership
229	2146	SIMPLEX	Windward Islands
230	2158	2550	WFA, Tampa Bay WLC, Rogers City WRL, Buffalo PJC, Curacao
231	2166	2550	VRT Burmuda
233	2166	2582	8PO, Barbados, VSO-2, West End Marsh Harbor

00	2182	SIMPLEX	Distress Calling
236	2203	SIMPLEX	Ship-to-Ship Gulf of Mexico
238	2206	2582	WLC, Rogers City Halifax
239	2237	2397	Alaska Ketchikan
240	2240	2400	Alaska Juneau, Nome
241	2290	2735	9YL-Trinidad
242	2366	2450	WOO New Jersey
245	2390	2566	WOM Ft. Lauderdale
246	2400	SIMPLEX	
247	2406	2442	
248	2406	2506	WOM Ft. Lauderdale KMI Oakland
249	2419	SIMPLEX	Alaska
250	2422	SIMPLEX	Alaska
251	2427	SIMPLEX	Alaska
252	2430	2572	WLO Mobile
254	2430	SIMPLEX	Alaska
255	2447	SIMPLEX	Alaska
256	2450	SIMPLEX	Alaska
257	2458	2506	KGN, Del Cambre
258	2479	SIMPLEX	Alaska
259	2482	SIMPLEX	Alaska
261	2506	SIMPLEX	Alaska
262	2509	SIMPLEX	Alaska
263	2512	SIMPLEX	Alaska
264	2545	SIMPLEX	Ft. Defrance
265	2527	SIMPLEX	Windward Islands
266	2535	SIMPLEX	Alaska
267	2538	SIMPLEX	Alaska
268	2563	SIMPLEX	Alaska
269	2566	SIMPLEX	Alaska
270	2582	SIMPLEX	Barbados
271	2590	SIMPLEX	VIS, Grand Turk, Alaska
272	2600	SIMPLEX	Acapulco
273	2616	SIMPLEX	Alaska
274	2620	SIMPLEX	Baja Mexico
275	2638	SIMPLEX	Ship-to-Ship
276	2640	SIMPLEX	VPH-21 South Carcos
277	2670	SIMPLEX	USCG Working
278	2704	SIMPLEX	Ocean Racing
279	2735	SIMPLEX	Trinidad
280	2738	SIMPLEX	Ship-to-Ship All Except Great Lakes and Gulf
281	2782	SIMPLEX	WGK, St. Louis, WCM, Pittsburg WJG, Memphis

282	2830	SIMPLEX	Ship-to-Ship, Gulf Only
301	3023	SIMPLEX	Aeronautical Enroute
302	3198	SIMPLEX	Alaska Point-to-Point
303	3201	SIMPLEX	Alaska Point-to-Point
304	3258	SIMPLEX	Alaska
305	3261	SIMPLEX	Alaska
306	3449	SIMPLEX	Alaska Aero
448	4063	SIMPLEX	WCM Pittsburg
449	4087.8	SIMPLEX	WJG Memphis
450	4115.7	SIMPLEX	WFW Jeffersonville
451	4125	SIMPLEX	4A LTD Coast/Intership
452	4143.6	SIMPLEX	4B LTD Coast/Intership
453	4419.4	SIMPLEX	4C LTD Coast/Intership
454	4366.7	SIMPLEX	Alaska
455	4369.8	SIMPLEX	Alaska
456	4382.2	SIMPLEX	Lorain
457	4383.8	SIMPLEX	
458	4397.7	SIMPLEX	Alaska
459	4403.9	SIMPLEX	Alaska
460	4410.1	SIMPLEX	
461	4422.5	SIMPLEX	Alaska
462	4425.6	SIMPLEX	Alaska
463	4428.6	SIMPLEX	Buffalo
464	5472	SIMPLEX	Alaska Aero
465	4696	SIMPLEX	Alaska Aero
501	5164.5	SIMPLEX	Alaska Public Fixed
502	5167.5	SIMPLEX	Alaska Emergency/Calling
503	5680	SIMPLEX	Aero Search/Rescue
648	6209.3	SIMPLEX	WJG Memphis
649	6212.4	SIMPLEX	WCK St. Louis
650	6215.5	SIMPLEX	6 MHZ Calling Freq.
651	6218.6	SIMPLEX	6A LTD Coast/Intership
652	6221.6	SIMPLEX	6B LTD Coast/Intership
653	6521.9	SIMPLEX	6C LTD Coast/Intership
851	8291.1	SIMPLEX	8A LTD Coast/Intership
852	8294.2	SIMPLEX	8B LTD Coast/Intership
1251	12429.2	SIMPLEX	12A LTD Coast/Intership
1252	12432.3	SIMPLEX	12B LTD Coast/Intership
1253	12435.4	SIMPLEX	12C LTD Coast/Intership
1651	16587.1	SIMPLEX	16A LTD Coast/Intership
1652	16590.2	SIMPLEX	16B LTD Coast/Intership
1653	16593.3	SIMPLEX	16C LTD Coast/Intership
2251	22124	SIMPLEX	22A LTD Coast/Intership
2252	22127.1	SIMPLEX	22B LTD Coast/Intership
2253	22130.2	SIMPLEX	22C LTD Coast/Intership
2254	22130.3	SIMPLEX	22D LTD Coast/Intership
2255	22136.4	SIMPLEX	22E LTD Coast/Intership

SEA 222 FREQUENCY MASK
ITU CHANNELS

4 MHz BAND

CHANNEL	SHIP TRANSMIT	SHIP RECEIVE
401	4063.0	4357.4
402	4066.1	4360.5
403	4069.2	4363.6
404	4072.3	4366.7
405	4075.4	4369.8
406	4078.5	4372.9
407	4081.6	4376.0
408	4084.7	4379.1
409	4087.8	4382.2
410	4090.9	4385.3
411	4094.0	4388.4
412	4097.1	4391.5
413	4100.2	4394.6
414	4103.3	4397.7
415	4106.4	4400.8
416	4109.5	4403.9
417	4112.6	4407.0
418	4115.7	4410.1
419	4118.8	4413.2
420	4121.9	4416.3
421	4125.0	4419.4
422	4131.1	4422.5
423	4131.2	4425.6
424	4134.3	4428.7
425	4137.4	4431.8
426	4140.5	4434.9
451	4125.0	SIMPLEX
452	4143.6	SIMPLEX
453	4419.4	SIMPLEX

6MHz Band

CHANNEL	SHIP TRANSMIT	SHIP RECEIVE
601	6200.0	6506.4
602	6203.1	6509.5
603	6206.2	6512.6
604	6209.3	6515.7
605	6212.4	6518.8
606	6215.5	6521.9
651	6218.6	SIMPLEX
652	6221.7	SIMPLEX
653	6521.9	SIMPLEX

8 MHz BAND

CHANNEL	SHIP TRANSMIT	SHIP RECEIVE
801	8195.0	8718.9
802	8198.1	8722.0
803	8201.2	8726.1
804	8204.3	8728.2
805	8207.4	8731.3
806	8210.5	8734.4
807	8213.6	8737.5
808	8216.7	8740.6
809	8219.8	8743.7
810	8222.9	8746.8
811	8226.0	8749.9
812	8229.1	8753.0
813	8232.2	8756.1
814	8235.3	8759.2
815	8238.4	8762.3
816	8241.5	8765.4
817	8244.6	8768.5
818	8247.7	8771.6
819	8250.8	8774.7
820	8253.9	8777.8
821	8257.0	8780.9
822	8260.1	8784.0
823	8263.2	8787.1
824	8266.3	8790.2
825	8269.4	8793.3
826	8272.5	8796.4
827	8275.6	8799.5
828	8278.7	8802.6
829	8281.8	8805.7
830	8284.9	8808.8
831	8288.0	8811.9
851	8291.1	SIMPLEX
852	8294.2	SIMPLEX

12 MHz BAND

CHANNEL	SHIP TRANSMIT	SHIP RECEIVE
1201	12330.0	13100.8
1202	12333.1	13103.9
1203	12336.2	13107.0
1204	12339.3	13110.1
1205	12342.4	13113.2
1206	12345.5	13116.3
1207	12348.6	13119.4
1208	12351.7	13122.5
1209	12354.8	13125.6
1210	12357.9	13128.7
1211	12361.0	13131.8
1212	12364.1	13134.9
1213	12367.2	13138.0
1214	12370.3	13141.1
1215	12373.4	13144.2
1216	12376.5	13147.3
1217	12379.6	13150.4
1218	12382.7	13153.5
1219	12385.8	13156.6
1220	12388.9	13159.7
1221	12392.0	13162.8
1222	12395.1	13165.9
1223	12398.2	13169.0
1224	12401.3	13172.1
1225	12404.4	13175.2
1226	12407.5	13178.3
1227	12410.6	13181.4
1228	12413.7	13184.5
1229	12416.8	13187.6
1230	12419.9	13190.7
1231	12423.0	13193.8
1232	12426.1	13196.9
1251	12429.2	SIMPLEX
1252	12432.3	SIMPLEX
1253	12435.4	SIMPLEX

SEA 222 FREQUENCY MASK
ITU CHANNELS

16 MHz BAND

CHANNEL	SHIP TRANSMIT	SHIP RECEIVE
1601	16469.0	17232.9
1602	16463.1	17236.0
1603	16466.2	17239.1
1604	16469.3	17242.2
1605	16472.4	17245.3
1606	16475.5	17248.4
1607	16478.6	17251.5
1608	16481.7	17254.6
1609	16484.8	17257.7
1610	16487.9	17260.8
1611	16491.0	17263.9
1612	16494.1	17267.0
1613	16497.2	17270.1
1614	16500.3	17273.2
1615	16503.4	17276.3
1616	16506.5	17279.4
1617	16509.6	17282.5
1618	16512.7	17285.6
1619	16515.8	17288.7
1620	16518.9	17291.8
1621	16522.0	17294.9
1622	16525.1	17298.0
1623	16528.2	17301.1
1624	16531.3	17304.2
1625	16534.4	17307.3
1626	16537.5	17310.4
1627	16540.6	17313.5
1628	16543.7	17316.6
1629	16546.8	17319.7
1630	16549.9	17322.8
1631	16553.0	17325.9
1632	16556.1	17329.0
1633	16559.2	17332.1
1634	16562.3	17335.2
1635	16565.4	17338.3
1636	16568.5	17341.4
1637	16571.6	17344.5
1638	16574.7	17347.6
1639	16577.8	17350.7
1640	16580.9	17353.8
1641	16584.0	17356.9
1651	16587.1	SIMPLEX
1652	16590.2	SIMPLEX
1653	16593.3	SIMPLEX

22 MHz BAND.

CHANNEL	SHIP TRANSMIT	SHIP RECEIVE
2201	22000.0	22596.0
2202	22003.1	22599.1
2203	22006.2	22602.2
2204	22009.3	22608.3
2205	22012.4	22608.4
2206	22015.5	22611.5
2207	22018.6	22614.6
2208	22021.7	22617.7
2209	22024.8	22620.8
2210	22027.9	22623.9
2211	22031.0	22627.0
2212	22034.1	22630.1
2213	22037.2	22633.2
2214	22040.3	22636.3
2215	22043.4	22639.4
2216	22046.5	22642.5
2217	22049.6	22645.6
2218	22052.7	22648.7
2219	22055.8	22651.8
2220	22058.9	22654.9
2221	22062.0	22658.0
2222	22065.1	22661.1
2223	22068.2	22664.2
2224	22071.3	22667.3
2225	22074.4	22670.4
2226	22077.5	22673.5
2227	22080.6	22676.6
2228	22083.7	22679.7
2229	22086.8	22682.8
2230	22089.9	22686.9
2231	22093.0	22689.0
2232	22096.1	22692.1
2233	22099.2	22695.2
2234	22102.3	22698.3
2235	22105.4	22701.4
2236	22108.5	22704.5
2237	22111.6	22707.6
2238	22114.7	22710.7
2239	22117.8	22713.8
2240	22120.9	22716.9
2251	22124.0	SIMPLEX
2252	22127.1	SIMPLEX
2253	22130.2	SIMPLEX
2254	22133.3	SIMPLEX
2255	22136.4	SIMPLEX

3.5 CAUTION! FREQUENCY TOLERANCE

Under FCC Rules, the frequency tolerance for the Marine Service is ± 20 Hz. In order to achieve this accuracy a frequency counter with a long term accuracy of 1-3 Hertz should be used.

All work affecting the transmitter performance must be done by, or under the supervision of a person holding at least a General Radiotelephone FCC license.

3.6 SETTING THE TRANSMITTER FREQUENCIES

3.6.1 THE MASTER CLOCK OSCILLATOR

Either of two methods may be used to adjust the Master Clock:

1. Connect a high stability frequency counter to Pin 8 or Pin 11 of U17 on the Main Board (ASY 0222-01). Signal amplitude is approximately 5 Volts P-P. Adjust trimmer capacitor C151 for a frequency reading of exactly 6400.00 KHz.

2. Select the highest desired transmitter frequency (such as 22101.5 KHz). With the transmitter output connected to an appropriate dummy load and a few watts of re-inserted carrier being generated, connect an appropriate counter to the RF dummy load and adjust trimmer capacitor C151 for the correct carrier frequency. NOTE: This technique, when used with a good frequency counter is generally superior to method # 1.

4. INSTALLATION

4.1 MOUNTING THE TRANSCEIVER

All SEA models are compact enough to allow great flexibility in location, even on smaller vessels. Several options for mounting are available. The mounting bracket fits underneath or on top of the transceiver for bulkhead, overhead or shelf locations. Figure 4.1 shows the outline dimensions of the SEA 222 and mounting holes. When choosing a location for the radio set, take care to avoid areas directly over a heater or lacking adequate ventilation.

4.2 A TYPICAL INSTALLATION

Figure 4.2 shows a typical installation consisting of three parts: (1) The radio equipment; (2) Interconnecting cable; (3) The antenna system.

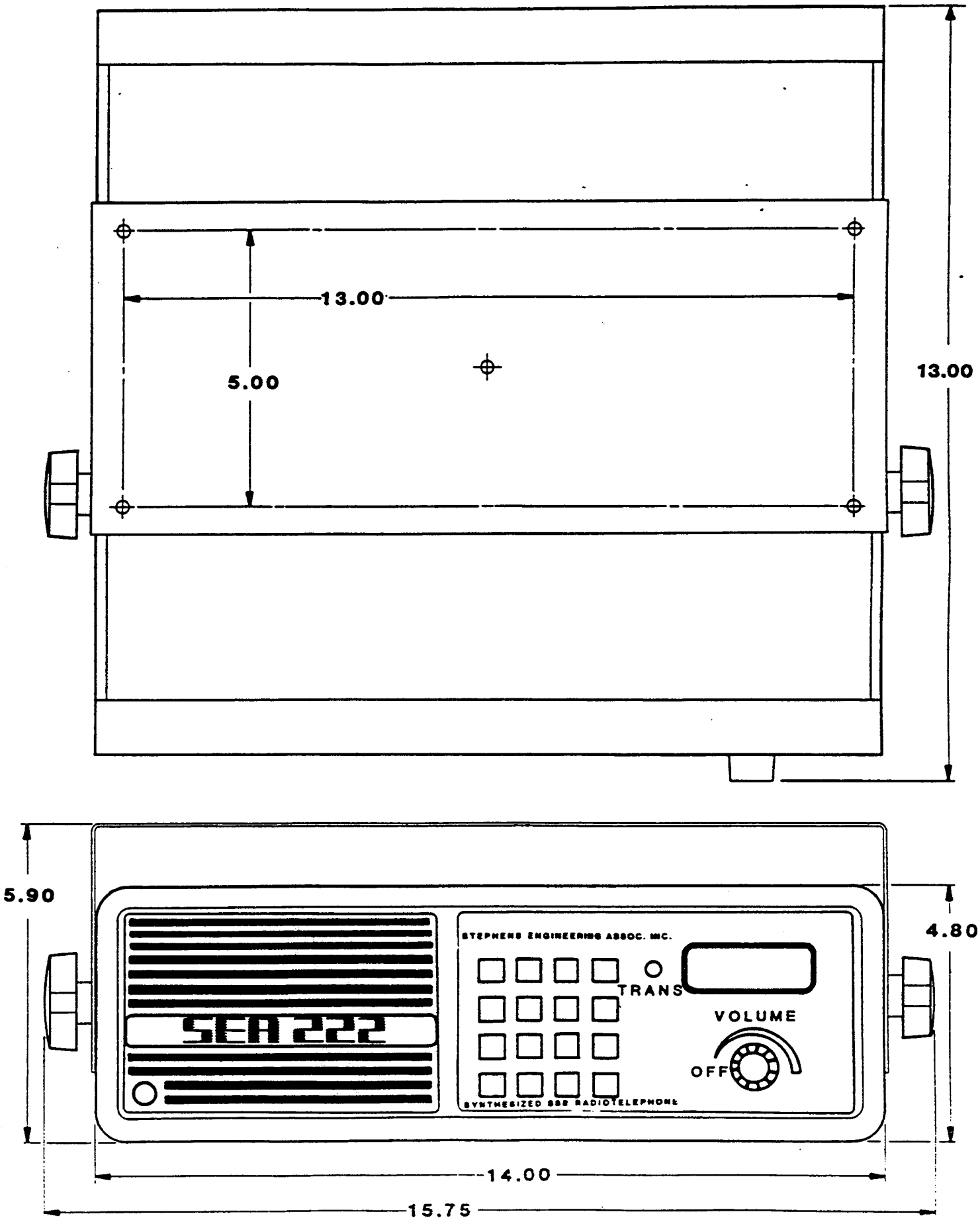
13.00
5.00
13.00
5.90
4.80
STEPHENS ENGINEERING ASSOC. INC.
TRANS
VOLUME
OFF
SEA 222
SYNTHESIZED SSB RADIOTELEPHONE
14.00
15.75

FIGURE 4.1

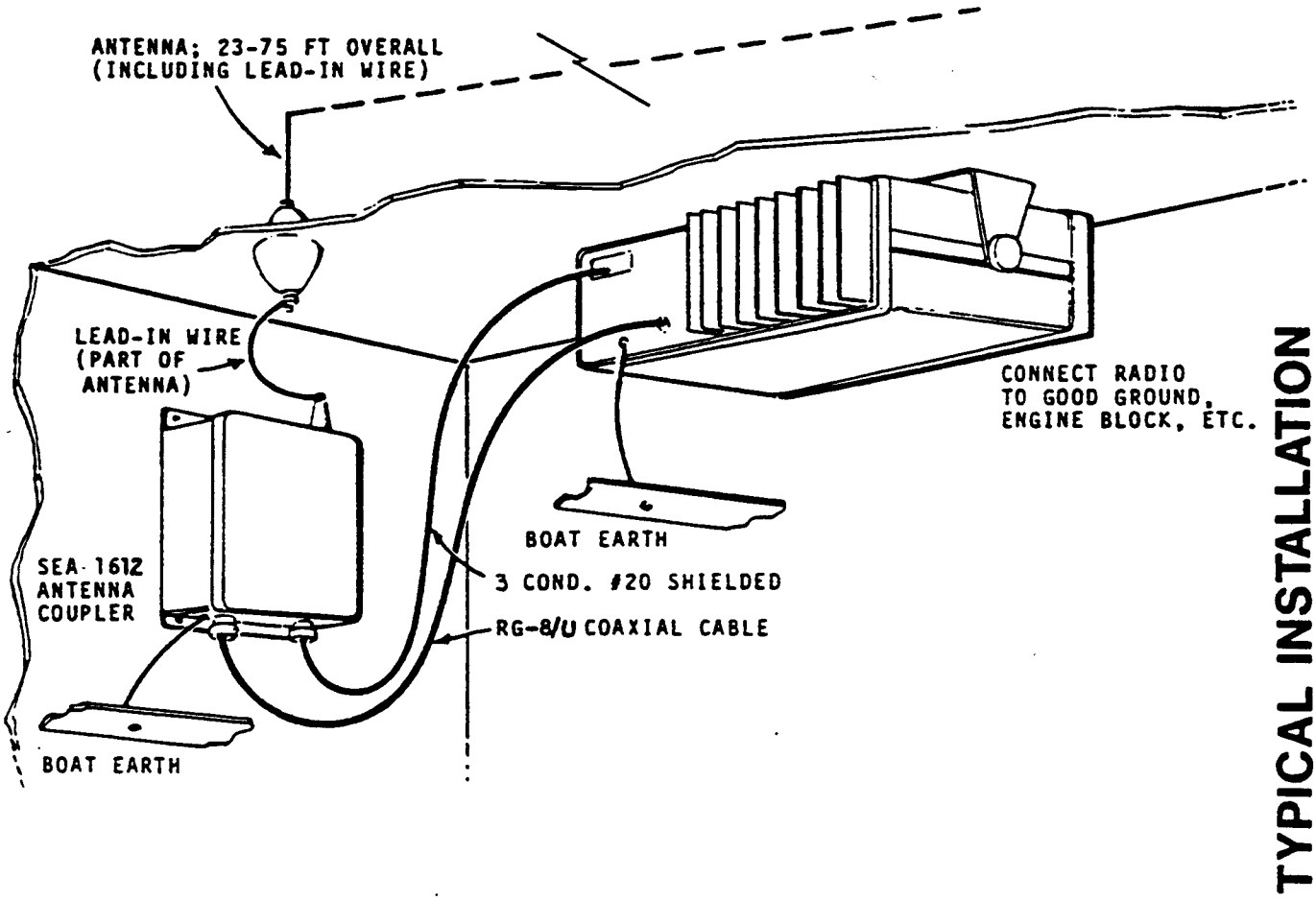

TYPICAL INSTALLATION

FIGURE 4.2

Any radio communications system operating in the MF-HF spectrum MUST have an adequate ground connection, otherwise the overall efficiency of the radio installation is degraded. In extreme cases, it may be impossible to properly load the radiotelephone into the antenna.

The 50 Ohm output impedance of the SEA 222 makes it necessary to employ an antenna system of the resonant or externally matched type. The use of the SEA 1612 antenna coupler in conjunction with a whip antenna allows an effiecient installation which will cover both the MF and HF bands. The SEA 1612 was designed specifically for Marine applications and will easily interface with the transceiver.

On wooden or fiberglass boats, the use of copper ground plate or the keel on a sailboat perform adequately. The ground system MUST be joined to the antenna coupler with a heavy copper strap.

4.3 REAR PANEL CONNECTIONS AND FUSES

4.3.1 THE POWER CONNECTOR

A heavy duty power plug is employed on the SEA 222 to assure minimum voltage drop in the primary power circuit. See Figure 4.3.1 for proper assembly of the power plug.

4.3.2 THE RF CONNECTOR

One type of VHF female connector is provided on the SEA 222 rear panel. The output impedance of this transceiver if 50 Ohms. The most common types of coaxial cables used are RG-58C/U and RG-213/U. The correct mating plug is the PL-259 or Amphenol 83-1SP.

4.3.3 THE REMOTE PLUG

A nine contact screw terminal type plug is provided on the SEA 222 rear panel, Figure 4.3.3, to allow the installation of an extension (simple remote), an external loudspeaker or a handset. Also provided is the switched, fused primary power (13.6 Volts) to operate an antenna coupler, along with an "all tuned" flag line.

TERMINAL FUNCTION

AF - Output of the audio power amplifier, AC coupled. Speaker impedance to be used is 3.2 Ohms or more.

SPKR - Internal speaker input. A jumper to AF is needed to operate the internal loudspeaker.

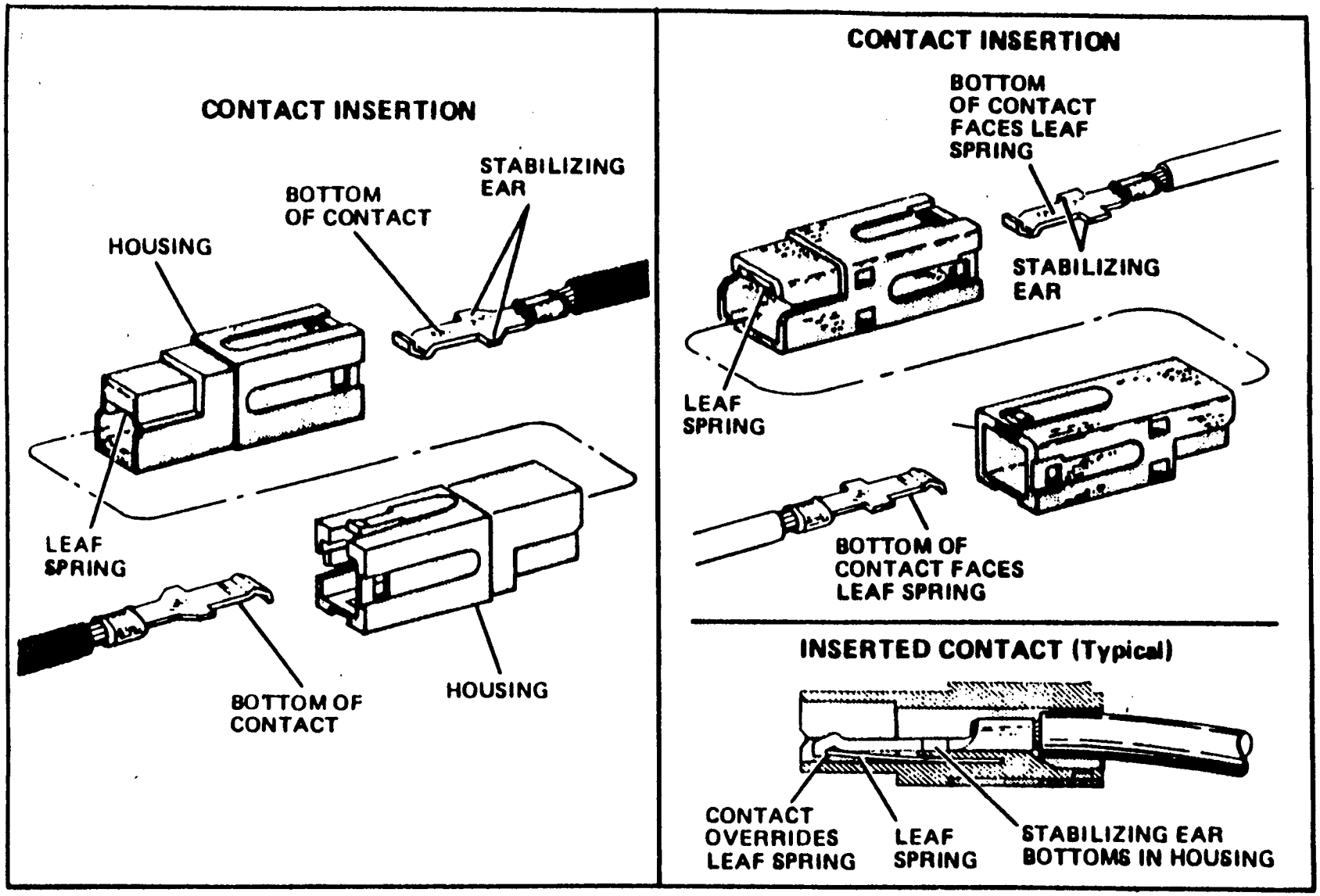

FIGURE 4.3.1

POWER PLUG ASSEMBLY

REPRODUCED AT GOVERNMENT EXPENSE

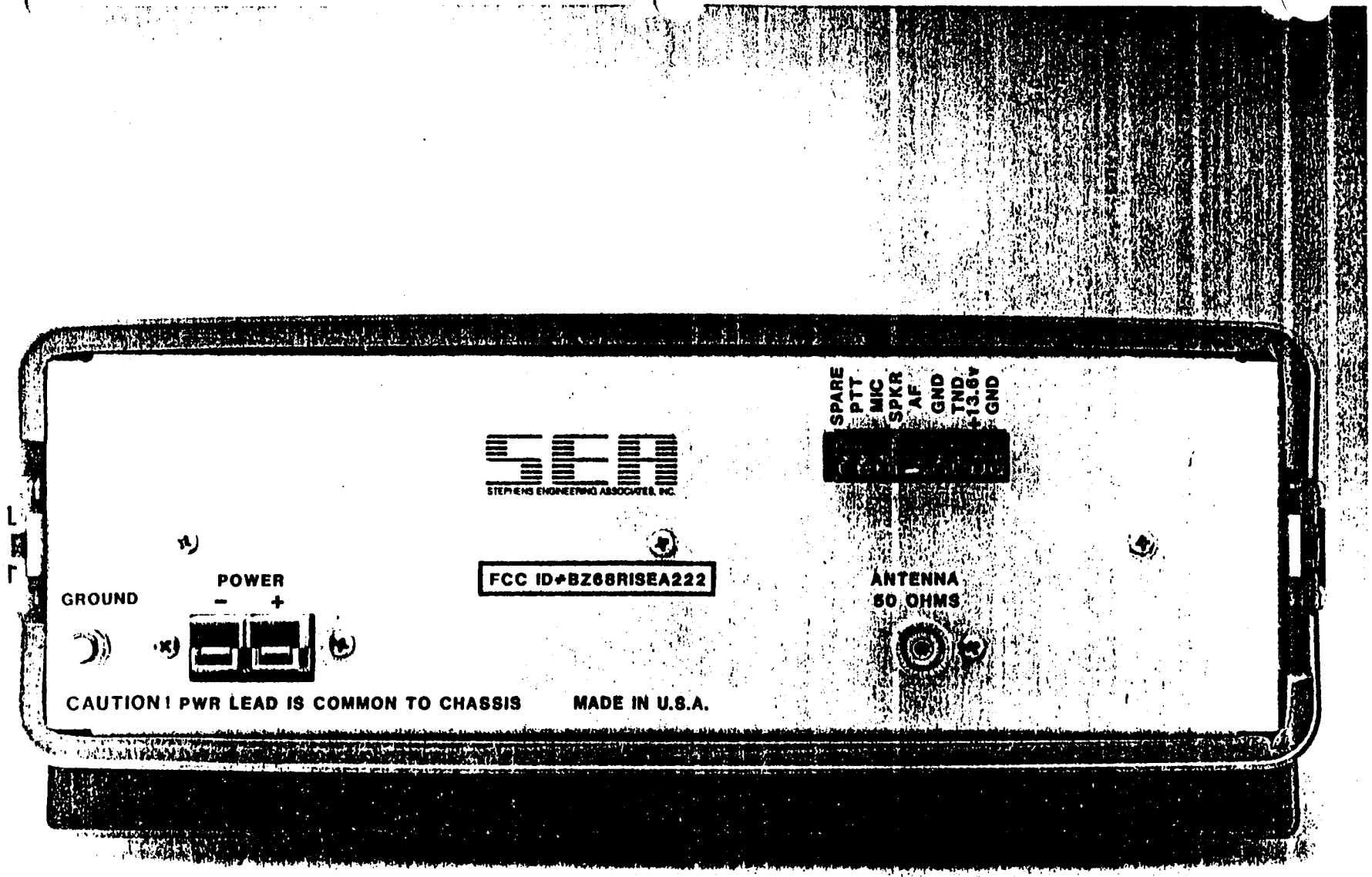

FIGURE 4.3.3

SEA 222 REAR VIEW

MIC - Input for a dynamic microphone in parallel with supplied palm microphone. (In some cases, the standard microphone may be disconnected when this terminal is used.)

PTT - Input to the transmitter keying circuit. By applying ground potential to this terminal, the PTT relays are activated.

13V - 13 Volts, switched through the normal ON/OFF switch of the SEA 222. Normally used to power an external antenna coupler such as the SEA 1612. DO NOT EXCEED 3 AMPS. The fuse for this circuit is the 5 AMP fuse located on the PA/Filter Board, ASY-0222-02.

TND - This terminal allows the connection of an "ALL TUNED" indicator line from an automatic antenna coupler. Grounding this line will cause the "TUNED" indicator in the VF display to light. (See ¶ 2.5.)

GND - Access to the negative side (ground) of the primary supply. Also common to the chassis.

DO NOT USE THESE TERMINALS FOR HIGH CURRENT APPLICATIONS.

4.3.4 FUSING

Three fuses are provided in the SEA 222, all mounted internally on the PA/Filter Board (ASY-0222-02).

Fuses F1 and F2 are 15 AMP, 3AG fast blow fuses. Each fuse protects one pair of power output transistors, and each fuse is provided with a reverse polarity protection diode.

Fuse F3 is a 5 AMP, 3AG fast blow fuse. This fuse protects the low level circuitry in the SEA 222 and also provides a fused 13 Volt power buss for an external antenna coupler. This fuse is also provided with a reverse polarity protection diode.

4.3.5 THE GROUND CONNECTION

A stainless steel bolt and nut are provided on the rear panel to allow a low resistance connection between the radiotelephone chassis and the engine block, keel or similar RF ground system.

5. THEORY OF OPERATION

5.1 GENERAL

The SEA 222 is a double conversion HF SSB transceiver. Certain circuits perform the same function in receive and transmit (bilateral design). The first intermediate frequency (I.F.) is 45 MHz and permits the use of low pass filters to provide excellent image, spurious and harmonic rejection. This type of broad band design results in a minimum of tuned circuits. The second I.F. of 6.4 MHz allows for good secondary image rejection and the use of relatively inexpensive crystal filters for sideband selection.

The SEA 222 uses a two loop PLL local oscillator system to allow complete frequency coverage without the addition of channel control crystals. Since the high frequency oscillators are all phase locked to a high stability reference oscillator, the frequency stability is strictly a function of the 6400.00 KHz Master Clock.

Most operating functions of the SEA 222 are controled through the front panel keyboard. The keyboard is used, along with the eight character VF display, as a control terminal. This allows the operator to communicate with the small microprocessor based computer which actually controls the various transceiver functions.

5.2 THE RECEIVER

5.2.1 BLOCK DIAGRAM

Figure 5.2.1 shows the block diagram of the receive mode. The received RF signal is routed from the rear panel antenna jack to J3 on the PA/Filter Board. On this PC Board, the signal is routed through a relay selected set of low pass filters and the antenna relay, K1, to J2. From J2 the signal goes to the RX input jack on the Main Board, J4. From J4 the signal passes first through a P.I.N. Protector circuit and then through a 2 MHz high pass filter. A second low pass filter with a cutoff frequency of 23 MHz completes the "front end" selectivity. No less than two cascaded filters are used, providing excellent image and first I.F. Rejection.

After filtering, the signal is applied to mixer, A1, where it is mixed with a signal from the 47 - 68 MHz VCO and up converted to the first I.F. Frequency of 45 MHz. The output from A1 is then passed through F1, a 45 MHz two pole monolythic filter with a bandwidth of approximately 15 KHz. This provides a comparatively narrow "window"

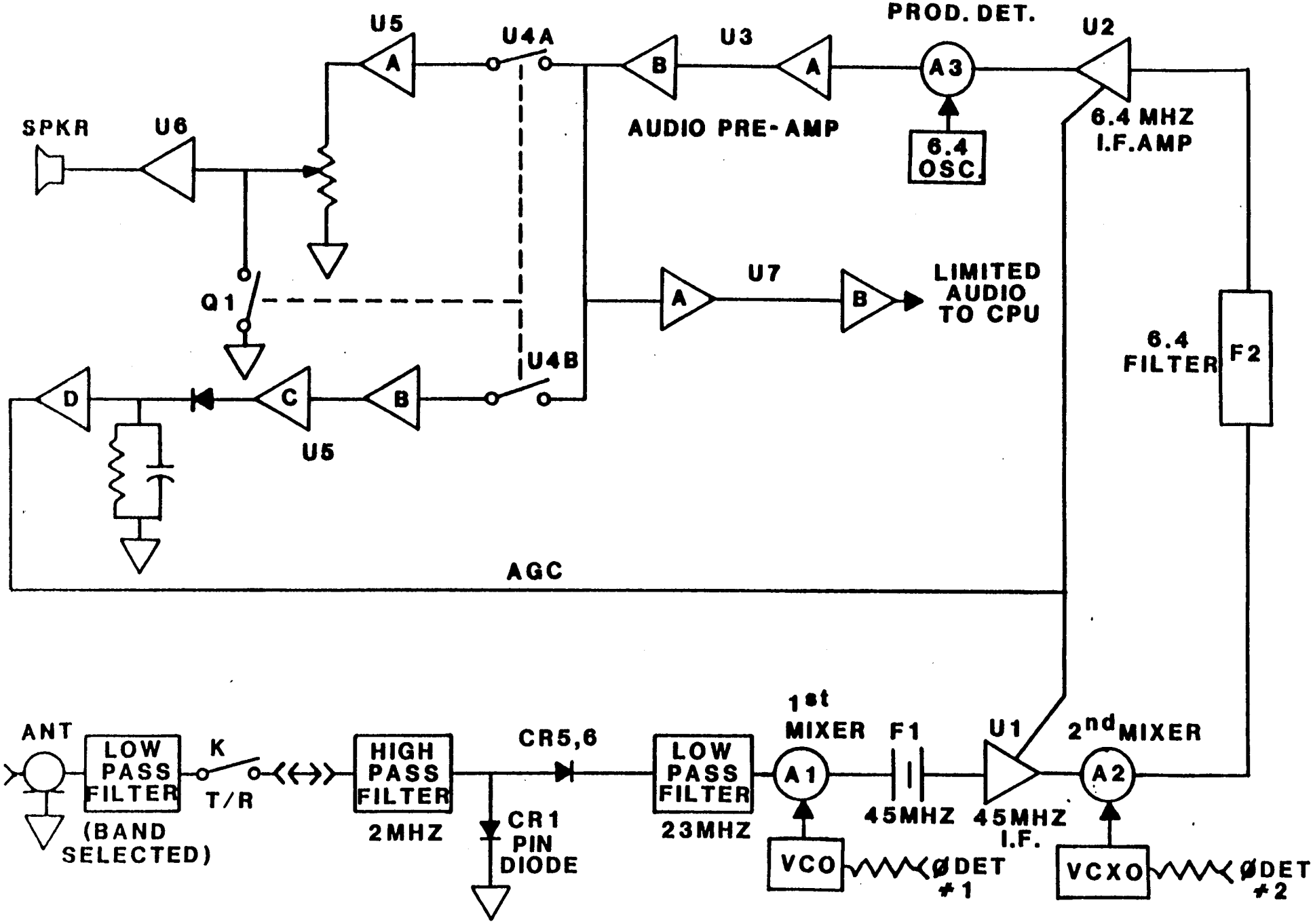

FIGURE 5.2.1

RECEIVER BLOCK DIAGRAM SEA222

which protects the following circuitry from intermodulation problems. The filtered 45 MHz I.F. Signal is then applied to the first bilateral I.F. Amplifier, U1.

After amplification in U1, the 45 MHz I.F. Signal is combined in A2 with a 38.6 MHz signal from the VCXO, down converted to the 6.4 MHz second I.F. Frequency and passed through F2, a narrow band signal sideband filter. The filtered signal is then amplified in bilateral I.F. Amplifier, U2, and combined with the 6.4 MHz BFO frequency in mixer A3. The output from A3 is a low level audio signal which is then amplified by the low noise audio preamplifier, U3.

Note that the 6.4 MHz filter selects the LOWER sideband. This is actually the UPPER sideband because of the frequency inversion which occurred at the first mixer.

After being amplified to a suitable level by the low noise pre-amplifier stage, the audio signal is then sent to three different circuits: The squelch limiter/amplifier, U7, provides a hard limited signal to the CPU. This signal is examined by the squelch software routine which determines the presence of voice signals.

The low level audio is also sent to the audio derived AGC circuitry which consists of U5B and U5C. These two operational amplifiers provide amplification and filtering to the audio signal which is then rectified by CR15. The diode output is a fast attack, slow release AGC voltage which is then applied to the AGC control buss of the I.F. Amplifier stages through U5D.

The third low level audio signal is sent to the signal audio pre-amplifier/filter, U5A, where it is approximately doubled in amplitude and band limited to a cutoff frequency of about 3000 Hz.

After being amplified and filtered, the receiver audio is then passed on to the front panel volume control where the operator can control the audio level applied to the input of the power amplifier stage, U6. The output from U6 provides the loudspeaker signal.

5.3 RECEIVE RF CIRCUITRY AND FIRST MIXER

As previously discussed, an incoming signal is first passed through a system of cascaded low and high pass filters, a T/R relay and a P.I.N. Diode device which is designed to protect the sensitive input mixer from damage due to high RF overloads. On the RF board, switching diodes CR5 and CR6 are foward biased by the +10V Rx buss, thus passing the received signal to the double balanced mixer A1. The use of a hot

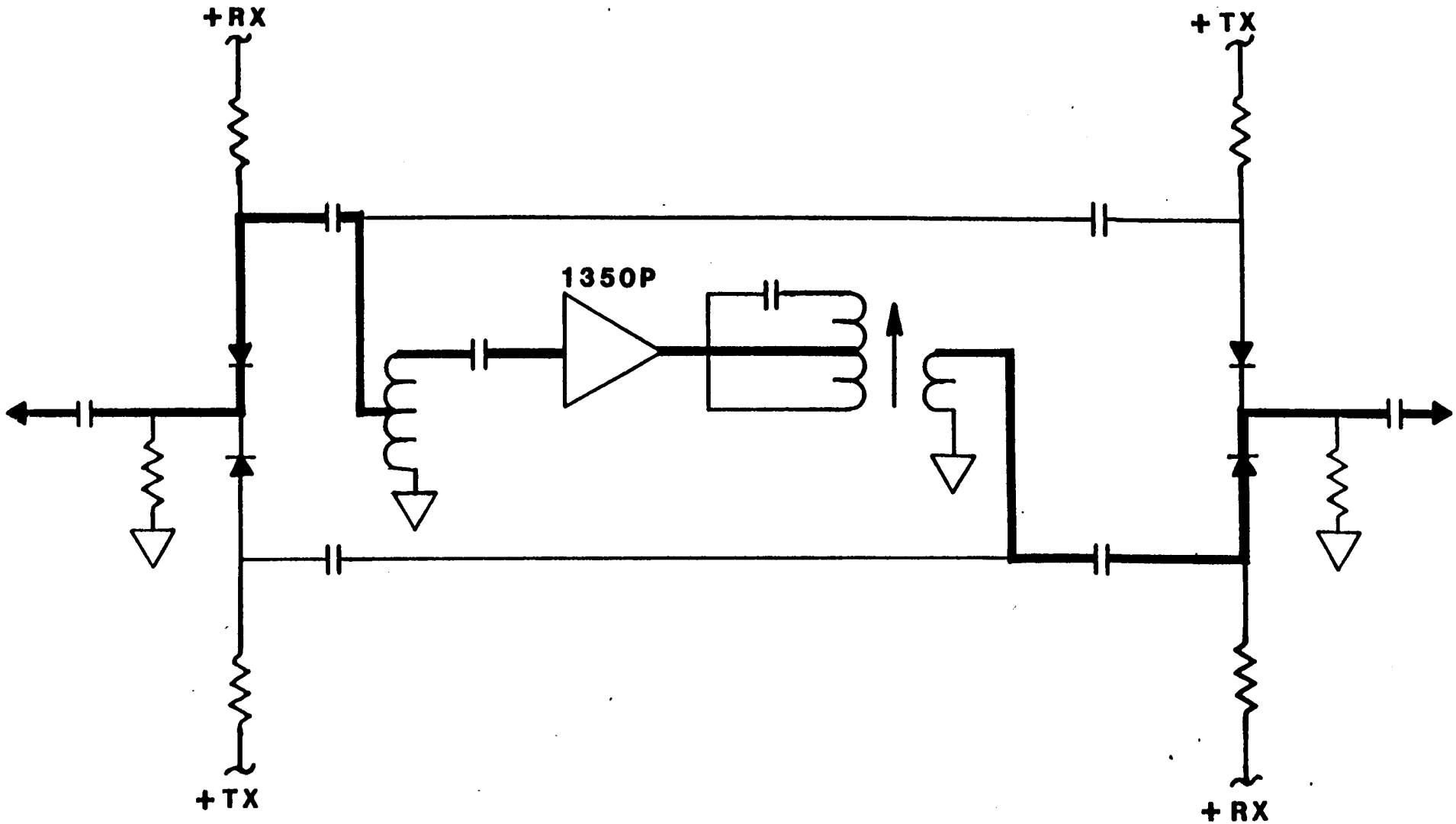

FIGURE 5.3.1

BI-LATERAL I.F.AMPLIFIER (SHOWN IN RECEIVE MODE)

carrier diode double balanced mixer assures minimal cross modulation and intermodulation distortion in the receiver front end. The 2 MHz high pass filter provides some protection from the very large signals generated by nearby standard broadcast transmitters.

5.3.1 THE BILATERAL 45 MHz I.F. AMPLIFIER

The output from A1 is the desired signal, upconverted to 45 MHz and filtered by F1, a two pole monolythic crystal filter with a bandwidth of about 15 KHz. This 45 MHz signal is then amplified by the first I.F. Ampifier. The amplifier stage is somewhat unique, in that it consists of a tuned MC1350P integrated circuit amplifier and a transistor buffer surrounded by a P.I.N. Diode array which allows the direction of signal flow through the amplifier to be reversed by properly biasing the switching diodes. (See Figure 5.3.1.) The advantage of this type of amplifier stage is that the direction of signal flow can be reversed at will, allowing the entire receiver system to "double" as a transmitter. This process minimizes the transceiver circuitry and allows considerable simplification in the design.

5.3.2 SECOND MIXER AND 6.4 MHz SSB FILTER

Once the 45 MHz I.F. Signal is amplified in U1, it is applied to the second double balanced mixer, A2, along with the VCXO signal at about 38.6 MHz. The DIFFERENCE frequency output, at 6.4 MHz is then passed through F2, a narrow bandwidth lower sideband filter. The LOWER sideband at this point is equivalent to a signal frequency UPPER sideband signal, since the first conversion INVERTS the information band, while the SECOND conversion to 6.4 MHz does not.

5.3.3 6.4 MHz I.F. AMPLIFIER AND PRODUCT DETECTOR

The twice converted, amplified and filtered signal from the 6.4 MHz filter (F2) is then passed through the second I.F. Amplifier. This is another tuned bilateral MC1350P Amplifier, similiar to the first I.F. Amplifier except for operating frequency. The output from the second I.F. Amplifier is then applied to A3, the product detector, along with a BFO signal at 6.4 MHz. The product detecter is still another double balanced hot carrier diode mixer, which assures a low distrotion, low noise detector with good dynamic range.

5.3.4 LOW NOISE AUDIO PREAMPLIFIER

Integrated circuit U3 is a low noise audio preamplifier which uses the type LM387 dual preamp chip. The first stage (U3A) is configured as a non-inverting amplifier with a stage gain of approximately 35. The non-inverting configuration is used to assure minimum noise figure.

The second stage (U3B) is configured as an inverting amplifier with a stage gain of approximately 9. The inverting configuration and lower gain assure maximum dynamic range. Overall gain of the preamplifier stage is approximately 315 with a noise contribution equivalent to approximately 0.5 uV. Since the minimum product detector output is normally approximately 20 uV or better, the AUDIO signal to noise floor exceeds 30 dB.

5.3.5 AUDIO PREAMPLIFIER/FILTER

U5A is connected as a moderate gain active low pass filter with a cutoff frequency of approximately 3000 Hz and a slope of 12 dB/octave. Some additional rolloff is provided in the low noise preamplifier. The effect of these filters is to remove the high frequency "hiss" present at the output of the product detector and to enhance the speech signal to noise ratio.

5.3.6 AUDIO POWER AMPLIFIER

Power integrated circuit U6, a type TDA2002, is used to raise the audio power level to about 4 Watts, which drives either the internal 3.2 Ohm loudspeaker or may be used to drive remote speaker systems through use of the rear panel accessory connector.

5.3.7 SQUELCH LIMITER/AMPLIFIER

Dual operational amplifier U7 is configured as a cascaded two stage audio amplifier. Gain per stage is about 22, providing a total gain of about 480. Since the amplifier is powered from the +5 Volt CPU power buss, the maximum output voltage swing is 5 Volts P-P. Thus the normal output from U7 consists of heavily limited noise and (when present) voice audio. This signal is sent to the control computer where a software analogue of SEAs normal "voice operated" squelch system resides. If a voice is present in the signal, the computer program will unsquelch the receiver if the squelch has been activated. Like the standard SEA "hardware squelch" system, the squelch requires a moving audio tone to remain open. A single tone will momentarily open the squelch but will not hold it open.

5.3.8 THE AUDIO DERIVED AGC SYSTEM

A sample of the low noise audio preamplified output is routed to U5B which is configured as a low gain inverting amplifier/low pass filter. The amplified, band limited output is then applied to the input of U5C, which is configured as a inverting amplifier with a gain of approximately 8. The non-inverting input of U5C is connected to approximately +3.4 volts from voltage divider R59, R60 and R61. The

output of U5C is then applied to the AGC detector diode, CR 16. The output of CR16 consists of positive voltage peaks which are proportional to the output level from the product detector and are referenced to the offset voltage applied to the non-inverting input of U5C. This voltage charges AGC time constant capacitor, C81, through resistor R70 which provides an AGC attack time of approximately 25 MSec, while the AGC discharge resistor, R71, provides a release time constant of about 2 seconds. This fast attack, slow release AGC voltage is buffered by non-inverting follower, U5D and applied to the I.F. Amplifier AGC port through steering diode CR17.

5.3.9 THE AUDIO T/R GATES

Integrated circuit U4 and MOSFET Q1 provide T/R gating functions in the audio amplifier circuitry as follows:

U4B is turned ON in the receive mode and connects preamplifier audio to the AGC amplifier/detector circuit. Turning this device OFF in the transmit mode prevents the AGC storage capacitor from "pumping up" on transmitter microphone audio from the preamplifier circuit. Similarly, U4A serves to disconnect the microphone audio circuitry from the product detector in the receive mode. This avoids any noise contribution from the microphone amplifier/clipper circuitry.

Q1 and U4C are operated by the squelch signal from the CPU. A positive output from the CPU turns Q1 ON, thus shorting the audio signal across the volume control, while the CPU signal is inverted by U4D and is then used to turn U4C OFF, greatly attenuating the audio signal applied to U5A from the audio preamplifier. Note that the squelch signal is controlled by the CPU and is positive during transmission periods. The overall function of the gate circuitry is to provide a thumpless squelch gate and a rapid, clickless transition between the transmit and receive modes.

5.4 THE TRANSMITTER

5.4.1 BLOCK DIAGRAM

Figure 5.4.1 shows the block diagram of the SEA 222 in the transmit mode. The microphone signal is fed to a amplifier/clipper/filter circuit (U8) for speech wave-shaping and is then applied through emitter follower Q2 to the balanced modulator, A3. The 6.4 MHz carrier oscillator is also applied to A3. The resulting double sideband suppressed carrier signal is amplified in the bilateral 6.4 MHz I.F. Amplifier, U2, passed through the 6.4 MHz lower sideband filter F2 where it is converted to a single sideband suppressed carrier signal and then mixed with a 38.6 MHz signal in mixer A2. The output from A2 at 45 MHz is amplified by U11 and then passed through the 45 MHz

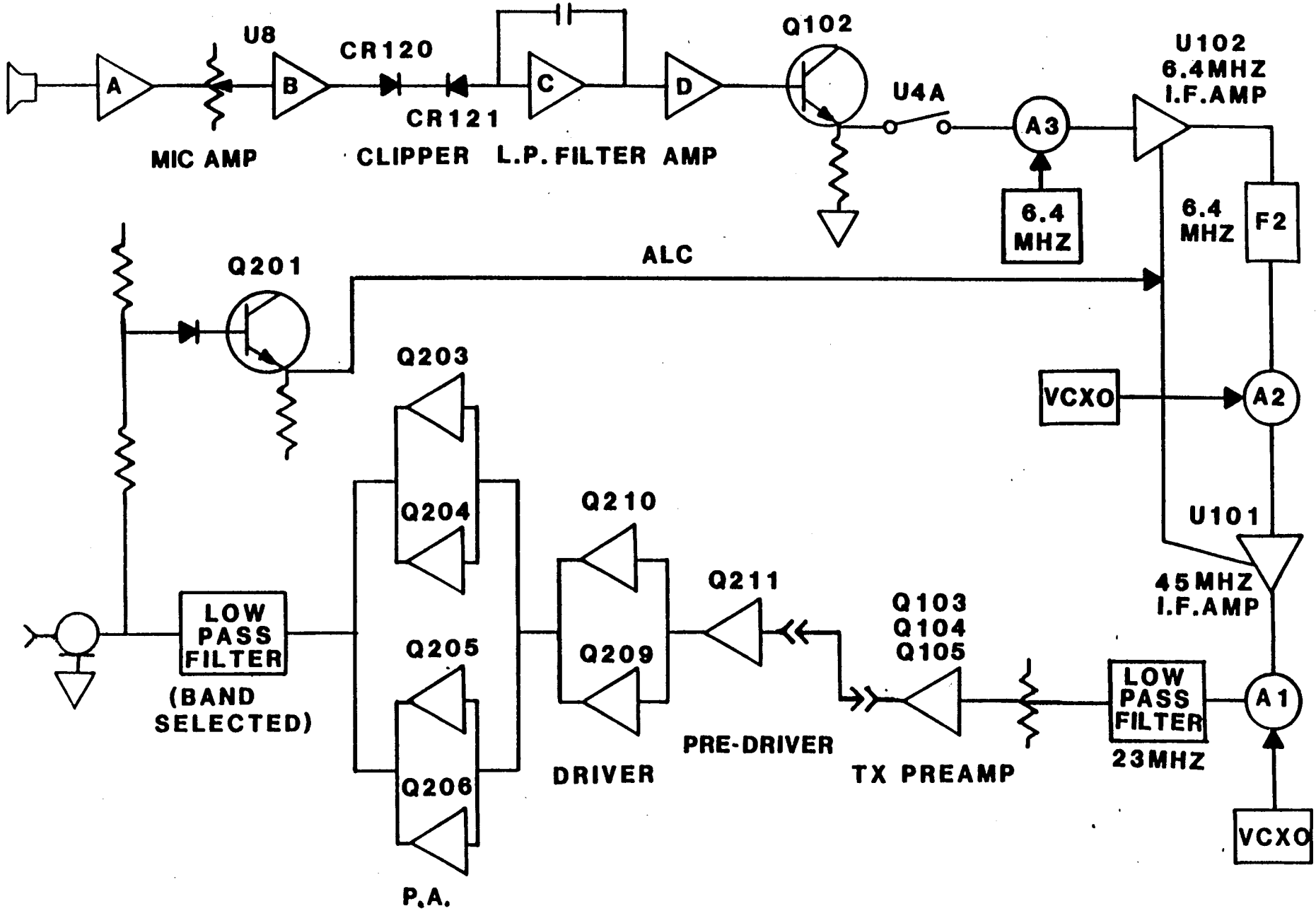

TRANSMIT BLOCK DIAGRAM
SEA 222

FIGURE 5.4.1

monolythic filter, F1, and down converted to the desired signal frequency by mixing with the required VCO frequency in A1. The signal output from A1 is passed through the front end low pass filter, switching diode CR7 and RF Gain Control R101 to the transmitter preamplifier. This amplifier consists of Q3, Q4 and Q5 and serves to boost the level of the signal to approximately +10 dBm.

The +10 dBm signal from J5, the main board transmitter output jack, is then connected by shielded cable to the input jack, J6 on the PA/Filter board, and applied to the transmitter predriver, Q11. Q11, a small power device, provides sufficient drive for the push-pull power driver which consists of Q9 and Q10. The approximate 10 Watt output from the power driver is then applied to the four transistor power amplifier which consists of Q3, Q4, Q5 and Q6 in a dual amplifier/combiner system.

The output from the power stage is at a level of 150 Watts and is then passed through an appropriate low pass filter (relay selected by the control computer) where a voltage sample is detected by CR2 and Q1 for use as an ALC feedback voltage. The filtered RF output is taken from J3 and connected via coaxial cable to the rear panel RF output jack.

5.4.2 MICROPHONE PREAMPLIFIER

The 600 Ohm dynamic microphone output is terminated by R76 and is then amplified by the microphone preamplifier, consisting of U8A and U8B. Both stages are configured as inverting amplifiers. U8A has an approximate gain of 6.5 and the gain U8B is approximately 12. The cascaded gain of approximately 100 can be adjusted to any required level by the microphone gain control potentiometer, R80.

5.4.3 SPEECH LIMITER

Biased diodes CR20 and CR21 are configured in a full wave peak clipper circuit. The output from this clipper is limited to about 0.6 Volts P-P by the action of the diodes. Normally, the input signal level is adjusted to approximately 1.2 Volts P-P, which results in a clipping level of 6 dB. To properly adjust the speech limiter circuit, R80 should be adjusted for a signal level at the cathode of CR20 which is just <u>twice</u> the signal level at the cathode of CR21. This adjustment should be made with normal voice input to the microphone.

5.4.4 SPEECH AMPLIFIER/LOW PASS FILTER BUFFER

U8C is configured as a low pass filter with a cutoff frequency of approximately 3000 Hz. Band limiting of the clipped microphone audio

is required to avoid intermodulation effects in later circuitry. The output from the low pass filter is buffered by inverting amplifier U8D and emitter follower Q2. The audio from Q2 is then passed through T/R gate U4A and applied to the balanced modulator, A3. The gain of U8D is preset to supply the correct modulating audio level to A3 to insure good carrier rejection and proper signal level to A3 to insure good carrier rejection and proper signal level through the I.F. Amplifiers. Note that adjustment of total transmitter gain is accomplished with R101 and NOT R80. R80 should be adjusted for 6 dB clipping as described above. Increasing the audio level into the clipper will only result in distortion and will NOT increase the peak output from the transmitter.

5.4.5 TRANSMITTER BALANCED MODULATOR

Double balanced mixer, A3, is used as the transmitter balanced modulator. The processed microphone audio is applied to the DC coupled port of A3, while the carrier signal at 6.4 MHz is applied to the L.O. Port. The output from the R.F. Port is a double sideband suppressed carrier signal which is then applied to the input of the 6.4 MHz bilateral I.F. Amplifier.

5.4.6 CARRIER REINSERTION AMPLIFIER

Carrier is reinserted when desired through amplifier U32. This integrated circuit is a voltage contolled attenuator, used here to control the level of reinserted carrier. Normally in the A3J mode, the control voltage port of U32 is held at +8 volts, which cuts off any output signal. When carrier is desired, the control computer switches in a level control potentiometer which allows the output signal from U32 to be adjusted to the desired level. Two control potentiometers are provided: The A3A (-16dB) level pot, R29 and the A3H (-6dB) level pot, R30. The reinserted carrier signal is routed around F2 and applied to mixer A2.

5.4.7 6.4 MHz I.F. AMPLIFIER AND SSB FILTER

From A3, the 6.4 MHz double sideband suppressed carrier signal is applied to the input of the bilateral 6.4 MHz I.F. Amplifier. This amplifier and the 45 MHz bilateral I.F. Amplifier, U1, are both gain controlled in the transmit mode by the ALC voltage derived from the power amplifier.

The 6.4 MHz crystal filter, F2, is a LOWER sideband filter with a total passband of approximately 2.1 KHz. Passing the double sideband suppressed carrier signal through this filter results in a LOWER sideband 6.4 MHz, suppressed carrier signal which is then applied to the up converter balanced modulator, A2.

5.4.8 THE UP CONVERTER, 45 MHz I.F. AMP AND FILTER

The up converter mixer is a double balanced diode ring type mixer with inputs from the 38.6 MHz VCXO and the 6.4 MHz I.F. Amplifier. The mixer output is amplified by the bilateral 45 MHz I.F. Amplifier. The operation of this amplifier is the same as the 6.4 MHz amplifier except for frequency. The SUM of the two frequencies is selected by the 45 MHz I.F. Filter. Selecting the sum frequency results in a LOWER sideband 45 MHz SSB signal.

The high impedance 45 MHz monolythic filter is matched to the low impedance amplifier and mixer stages by low Q PI networks to provide for a ripple free, low loss filter termination. The filter output is applied to the input of the down converter or signal mixer.

5.4.9 SIGNAL MIXER AND LOW PASS FILTER

A1 is another double balanced ring diode mixer. The output from this stage is the down converted 45 MHz SSB signal. This signal has been changed to the desired OPERATING frequency by mixing with a signal from the VCO and the use of the DIFFERENCE frequency here results in a frequency inversion. Thus the output signal is an UPPER sideband SSB signal as required. The mixer output is passed through a seven section elliptical function low pass filter which provides some 50 dB of rejection for the image and I.F. Frequencies above 23 MHz.

5.4.10 TRANSMITTER SIGNAL PREAMPLIFIER

The signal output from the low pass filter is switched through CR7 to the input of the transmitter preamplifier. This is a two stage wide band amplifier, with the first stage configured as a two transistor direct coupled pair. The first transistor, Q3, is connected as a common emitter stage which is directly coupled to Q4. Q4 is an emitter follower which provides power gain and impedance matching for the output signal. DC feedback from the emitter of Q4 to the base of Q3 stabilizes the circuit operating point over a wide temperature range, while the use of VHF transistors provides a very wide frequency response.

Q5 is driven from the output of emitter follower Q4 and is configured as a transformer coupled grounded emitter amplifier. DC feedback is provided by the emitter resistor, R107. The output from this stage is nominally +10 dBm. From J5, the SSB signal goes to the PA/Filter board for further amplification.

5.4.11 TRANSMITTER PREDRIVER

The transmitter low level signal is applied through a 3 dB pad and a wide-band transformer to the base of Q11. Q11 is a 2N3866 connected in

the common emitter configuration and is transformer coupled to the push-pull driver stage. Bias for Q11 is provided by the base resistor network with R41 used to adjust the idling (no signal) current in the device to 60 mA. (0.30 Volts across R43) R43 is used, along with the press on heat sink, to provide thermal stability.

5.4.12 TRANSMITTER DRIVER

Transistors Q9 and Q10 are small plastic RF power devices, connected as push-pull common emitter amplifier. Transformer T11 provides push-pull base drive from the collector of Q11, while transformers T9 and T10 provide collector to load impedance matching and DC power decoupling, respectively. Gain/bandwidth compensation is provided by the collector/base feedback networks and the various peaking capacitors and terminating resistors. Temperature tracking bias is provided for Q9 and Q10 by bonding a silicon diode, CR9, to the PC mounted heat sinks for Q9 and Q10. Idling current (no signal) for the driver devices is approximately 130 mA and is adjusted by selecting the correct value for FS3 and/or FS4.

As part of the gain/bandwidth compensation circuitry for the total power amplifier, the output from the transmitter driver is connected to the output power amplifier through a 3 dB pad consisting of R30, R31 and R32.

5.4.13 TRANSMITTER POWER AMPLIFIER

The power amplifier in the SEA 222 is made up of two 75 Watt power amplifier modules, a power splitter and a power combiner. Each amplifier module is a push-pull common emitter design, each is independently fused and each has its own temperature stabilized bias source. Each amplifier, like the push-pull driver, has the collector voltage present at all times. The amplifiers are activated by turning on the various bias supplies when in the transmit mode. The power amplifier bias is provided from the +10 Volt Tx buss across two silicon diodes, one diode of which is bonded to the heat transfer plate used to heat sink the power devices. This is CR 8. CR7, in series with CR8 is used to compensate for the junction voltage drop of the two amplifier bias emitter followers, Q7 and Q8. Each amplifier is normally adjusted to 500 mA idling current (no signal). R26 adjusts the idling current for Q3 and Q4, while R27 adjusts the idling current for Q5 and Q6.

At the input to the power amplifier, T8 is provided as a wide band hybrid which splits the driver power output into two equal parts. Each of these signals is then independently amplified by a two transistor push-pull power amplifier module. The amplifier outputs are then recombined in hybrid T1. Resistors are provided to terminate each hybrid in the event of failure of one of the power amplifier modules.

Configuring the power amplifier in this fashion has the advantage of providing for better system redundancy, better heat distribution for the output devices and additionally provides a much wider range of useable output power devices.

5.4.14 OUTPUT LOW PASS FILTER(s)

Four low pass filters are provided to cover the frequency range from 2 - 23 MHz. The highest frequency filter, which covers the 16 - 23 MHz spectrum is in the circuit at all times. When lower frequencies are in use, a lower frequency filter is placed in series with the 16 - 23 MHz filter. This provides much greater total VHF stopband rejection than would the use of independent filters. Note that the high frequency filter is a 5 pole elliptical function design, while the lower frequency filters are 7 pole elliptical function types. This is possible because of the natural drop in spurious outputs from the power amplifier at higher frequencies. Filter selection is through small power relays which are operated by the control computer through serial relay driver, U1.

5.4.15 ALC CIRCUIT

The ALC circuit provides a DC level which is proportional to the RF output at the antenna connector on the rear panel. This DC level is used to control the gain of the two I.F. Amplifiers on the main board in order to prevent transmitter overload and resultant nonlinearity. An additional function of the ALC circuit is to provide a visual "modulation" indication of the transceiver front panel. This helps the operator determine that he is properly modulating the transceiver.

The voltage across R5 is derived from the actual RF output voltage through a voltage divider and diode detector CR1 and CR2. The output from the detector is applied to R5/C3 which has a time constant of approximately 250 mSec. This fast attack/medium fast release voltage waveform is buffered by emitter follower Q1, routed to the main board through J1 and the interboard cable, and then applied through steering diodes to the ALC control buss and the LED driver circuitry.

Thus, it can be seen that the main board gain control potentiometer, R101, sets the average gain "floor" for the transmitter and the ALC potentiometer adjusts the attack threshold for the ALC feedback voltage. Under normal drive conditions, the instantaneous ALC feedback voltage will not exceed the idling DC level on the ALC buss. Under high drive conditions, when the output attempts to exceed 150 watts, the ALC feedback will override the DC level and reduce transmitter gain to prevent distortion.

5.5 THE PHASE LOCKED LOCAL OSCILLATOR SYSTEM

5.5.1 BLOCK DIAGRAM

Figure 5.5.1 shows the block diagram of the phase locked local oscillator system of the SEA 222.

A two loop system is used in the SEA 222 consisting of the high frequency loop, operating with a 6.4 KHz reference frequency and the low frequency loop which operates with a 100 Hz reference. The combination of two loops provides 100 Hz resolution over the high frequency spectrum, along with reasonable loop switching and settling times.

The high frequency loop starts with the VHF VCO (Voltage Controlled Oscillator). This oscillator actually consists of two separate oscillators, where the tuning range is divided into two approximately equal segments. The use of two oscillators, bandswitched by the control computer, provides good VCO spectral purity over the desired tuning range of 47 - 68 MHz. Both VCOs are varactor tuned by an output voltage from the phase detector in synthesizer chip, U11.

The signal from the selected VCO is buffered and then applied to the first signal mixer, A1. Simultaneously, a sample of the VCO output is applied to the high speed loop dual modulus prescaler, U12.

The low speed loop starts with the 38.6 MHz VCXO, Q15. This oscillator operates over the range of 38.5984 to 38.6047 MHz and is varactor tuned by an output voltage from the phase detector in synthesizer chip U16.

The VCXO signal is buffered by Q16 and then applied to the second signal mixer, A2. Simultaneously, a sample of the VCXO signal is applied to one of the inputs of an HCMOS exclusive OR gate. A buffered 6.4 MHz signal from the master clock oscillator is applied to the second input of the exclusive OR gate which acts as a harmonic mixer. The output signal is the difference between the VCXO signal and the 6th harmonic of the clock signal at 38.4 MHz, or approximately 200 KHz. This 200 KHz signal is filtered, buffered and then applied to the signal input of the low speed loop synthesizer chip, U16.

From the above discussion it may be seen that ALL of the internal conversion oscillator frequencies are phase locked to the 6400.0 KHz master clock oscillator, that the first conversion oscillator consists of a VCO which operates as a "coarse tuning" oscillator having a basic resolution of 6.4 KHz and that, finally, the second conversion oscillator operates as a "fine tuning" loop which tunes 6.3 KHz in 100 Hertz steps.

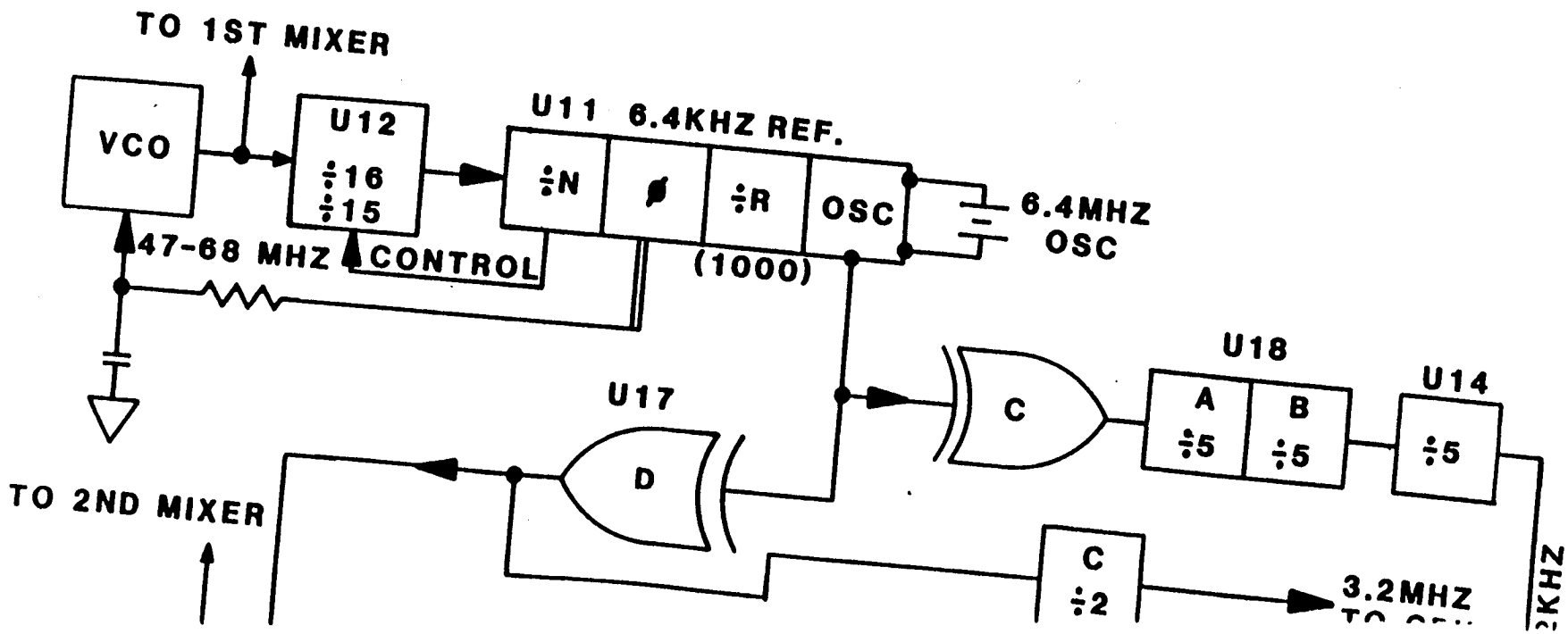
TO 1ST MIXER
VCO
U12
÷16
÷15
U11 6.4KHZ REF.
÷N
ø
÷R
OSC
(1000)
6.4MHZ
OSC
47-68 MHZ
CONTROL
U18
A
÷5
B
÷5
U14
÷5
C
U17
D
TO 2ND MIXER
C
÷2
3.2MHZ

.2 THE REFERENCE CLOCK OSCILLATOR

The master clock oscillator operates at a frequency of 6400.0 KHz. This frequency allows the use of a compact, high stability crystal which is enclosed in a temperature stabilized holder. The combination of a high stability crystal, capacitors of the proper temperature coefficient and crystal temperature stabilization provides excellent frequency stability over the environmental temperature range of the equipment. Warm up time for the clock oscillator is less than 3 minutes.

The oscillator used is the oscillator portion of synthesizer chip U11. This circuit has been especially designed for use as a stable high frequency crystal oscillator and also provides the high speed loop reference divider in the form of the built in divide-by-R counter. This counter is set to 1000 and provides the phase detector with a stable reference of 6.4 KHz.

5.5.3 LOW SPEED LOOP REFERENCE

In order to provide a 100 Hz reference for the low speed (100 Hz) phase locked loop, a sample of the 6400.0 KHz master clock signal is divided by 125 in three cascaded quinary counters. Two high speed quinary counters are provided by U18 and the third by U14. The output from U14 is at a frequency of 51.2 KHz. This 51.2 KHz signal is then applied to the reference divider input of synthesizer chip U16. The internal divide-by-R counter in U 16 is set to 512 during fire up initialization, thus providing U16s phase detector with a stable reference of 100 Hz.

5.5.4 CPU CLOCK DIVIDER

The CPU clock signal for the control computer is also derived from the master clock oscillator through one of the flip-flops in U18. Dividing the 6400.0 KHz master clock signal by two provides the CPU with a stable clock signal at 3200.0 KHz. This is within the allowed clock range of the CPU and assures that CPU operation will be syncronous with all other counters in the radio, thus minimizing counter generated noise and spurious signals.

5.5.5 THE HIGH FREQUENCY DIVIDE-BY-N COUNTER

The high speed divide-by-N function is performed through use of the built in divide-by-N counter in synthesizer chip U11 in conjunction with the dual modulus prescaler chip, U12.

In practice, the high frequency signal from the VCO is applied to U12 which normally operates in the divide-by-16 mode until a control signal from the divide-by-A counter in U11 forces it into the divide-by-15 mode. The number of cycles in each prescaler mode, along with the internal divide-by-N counter, determines the actual divide-by-N modulus. The required modulus is calculated by the control computer for each given frequency and then the proper A and N counter register numbers are loaded into the synthesizer chip (U11) by the control computer.

5.5.6 HIGH FREQUENCY PHASE DETECTOR/LOOP FILTER

Integrated circuit U11 also contains the high frequency phase detector, whose output is proportional to the phase difference between the clock derived 6.4 KHz reference frequency and a similar input derived from the dual modulus/divide-by-N counter described in ¶ 5.5.5. The error voltage is filtered through a second order R/C filter and applied to the varactor tuning elements in the VCO circuit.

5.5.7 THE VCO SYSTEM AND ASSOCIATED BUFFERS

In the SEA 222 the first conversion oscillator consists of a pair of voltage controlled oscillators. These oscillators cover the frequency range of 47 - 68 MHz (corresponding to an operating frequency range of 2 - 23 MHz) and make use of a UHF low noise transistor in a Colpitts oscillator circuit. Each oscillator covers approximately one half the overall frequency range and the active oscillator is selected by the control computer through the transistor switches Q4 and Q5.

The frequency determining inductors are of the high Q toroidal type, while each oscillator uses a matched pair of hyperabrupt junction varactors as the tuning element.

The two oscillators are coupled to the emitter follower buffer, Q3, through small capacitors and the followers' low impedance output is applied to the high speed prescaler, U12, and the VCO buffer amplifier system. The VCO buffer consists of transistors Q12, Q13 and Q14. Q12 and Q13 are connected as a direct coupled two transistor wide band amplifier, while Q14 is connected as a common emitter, transformer coupled power buffer. The output from Q14 is terminated with a 3 dB pad and the +7 dBm output from the pad is applied to the LO input port of signal mixer, A1. The purpose of the 3 dB pad is to provide a constant 50 Ohm termination point for the mixer LO port and the buffer transistor output.

The two VCO circuits are essentially identical except for tuning range and are sufficiently buffered to prevent "pulling" or noise

modulation from the counter train or mixer. Typical near field noise sidebands are 60 dB or better below normal output on all channels in the frequency range of the equipment.

5.5.8 THE VCXO AND ASSOCIATE BUFFERS

The VCXO (voltage controlled crystal oscillator) serves as the second conversion oscillator for the SEA 222 and operates at approximately 38.6 MHz.

The crystal oscillator is a transistor overtone type, with an inductor in series with the crystal. Coupling varactor CR23 to the series inductor allows the crystal oscillator to be voltage tuned over the required frequency range. Q16 amplifies the VCXO signal to the level required by the second mixer, A2. A sample of the VCXO signal is also sent to the VCXO down converter, U17.

5.5.9 THEORY OF OPERATION: SECONDARY (VCXO) LOOP

The VCXO signal is down converted in U17, a HCMOS exclusive OR gate. In this application the exclusive OR gate operates as a double balanced harmonic mixer. An input from the VCXO at 38.6 MHz is mixed with a sample of the 6400.0 KHz master clock signal. The mixer output is taken at approximately 200 KHz and is the difference signal between the 38.6 MHz VCXO signal and the sixth harmonic of the master clock signal at 38.4 MHz.

The 200 KHz difference signal is buffered and filtered by the components associated with L16 and Q17, further buffered by another exclusive OR gate (operating as a non-inverting buffer) and then sent to the signal frequency input of synthesizer chip, U16.

In U16, an appropriate divide-by-N number is loaded into the divide-by-N counter by the control computer. This will result in the 200 KHz down converted VCXO signal being further reduced in frequency to approximately 100 Hz.

The down converted, down counted VCXO signal is now applied to the tri-state phase detector in U16 and compared in phase with the 100 Hz signal derived from the master clock. (See ¶ 5.5.3.) The resultant DC error signal is passed through a second order R/C loop filter and applied to the VCXO tuning varactor, CR23.

6. MODE AND FREQUENCY CONTROL

6.1 GENERAL

In the SEA 222, the frequency of operation is determined by loading a serial bit stream containing a binary number in the two synthesizer chip registers in the frequency synthesizer circuitry.

These binary numbers are calculated through an internal algorithm by the control computer. When the computer loads a desired frequency into the control computer, the computer then calculates all the required binary data streams and inputs the information into the various control registers.

Such data as filter band, VCO band (high or low), VCO loop divide-by-N, VCXO loop divide-by-N and various control bits are all calculated by the computer, once the desired channel is entered by the operator.

6.1.1 TRANSMITTER MODE SELECTION

The primary mode of operation of the SEA 222 is in the A3J (SSB with fully suppressed carrier) mode.

Two auxiliary modes are provided:

A3A: SSB with pilot carrier re-inserted 16 dB below PEP.

A3H: SSB with pilot carrier re-inserted 6 dB below PEP (AM equivalent).

A3J is the basic SSB operating mode and is used for ship to ship, base station to ship and point to point communications.

A3H is a secondary mode, designed to allow a degree of compatability between old style AM equipment and SSB systems. In this mode, the carrier is suppressed only 3 to 6 dB below PEP. Such systems are inherently wasteful of the power capability of any SSB transmitter. As required by law, the "E #0" channel is provided with A3H carrier. (See Page 2 -Operating Modes.)

In the SEA 222, the normal mode of operation is ALWAYS A3J. On public correspondence channels, the operator may, if desired, insert a -16 dB carrier, by entering the desired A3A channel into "scratchpad" memory and inserting the A3A bit (See ¶ 3.3.2 for scratchpad programming information.)

A3H mode operation on 2182.0 KHz (the international distress and calling frequency) is available by recalling emergency channel E#0.

Two carrier insertion potentiometers are provided on the main board. R29 and R30 control the reinsertion level in the A3A and A3H mode, respectively.

6.1.1 RECEIVE MODE SELECTION

Since the SEA 222 as normally supplied always operates as a normal upper sideband only SSB receiver, little mention need be made of alternate modes of operation.

AM reception is by the "exhalted carrier" or "zero beat" method. That is, the incoming signal is simply tuned in until the carrier wave is zero beat with the internal BFO. This technique has proven completely adequate for those applications where voice fidelity is desired. For reception of music, the internal I.F. and AF filters sharply limit the level of fidelity which may be achieved.

7. THE POWER SUPPLY CIRCUIT

7.1 GENERAL

The basic supply voltage for the SEA 222 is a negative ground 13.6 Volt DC source. Line voltage regulation of ± 15% or better is required, with a current capacity of at least 25 - 30 Amperes.

From this raw source are derived the necessary regulated operating voltages for the SEA 222 circuitry.

7.1.1 BLOCK DIAGRAM

Figure 7.1.1 shows a simplified schematic diagram of the power supply circuitry.

Once the basic 13.6 Volt power is provided, it is connected to the set through the heavy duty power plug, P1, on the rear panel. Three internally mounted fuses are provided to protect the set in the event of malfunction. Each fuse has a reverse voltage protection diode which will blow the fuse in the event of reversed line polarity.

The ON/OFF switch is part of the volume control potentiometer. From this switched 13.6 Volt buss, protected by 5 Amp fuse F3, all other required voltages are derived, EXCEPT the high current 13.6 Volt buss to the final amplifier transistors.

Several regulators, located throughout the set, distribute the required voltages. All the +10 Volt busses are derived from the 10 Volt regulator on the main board.

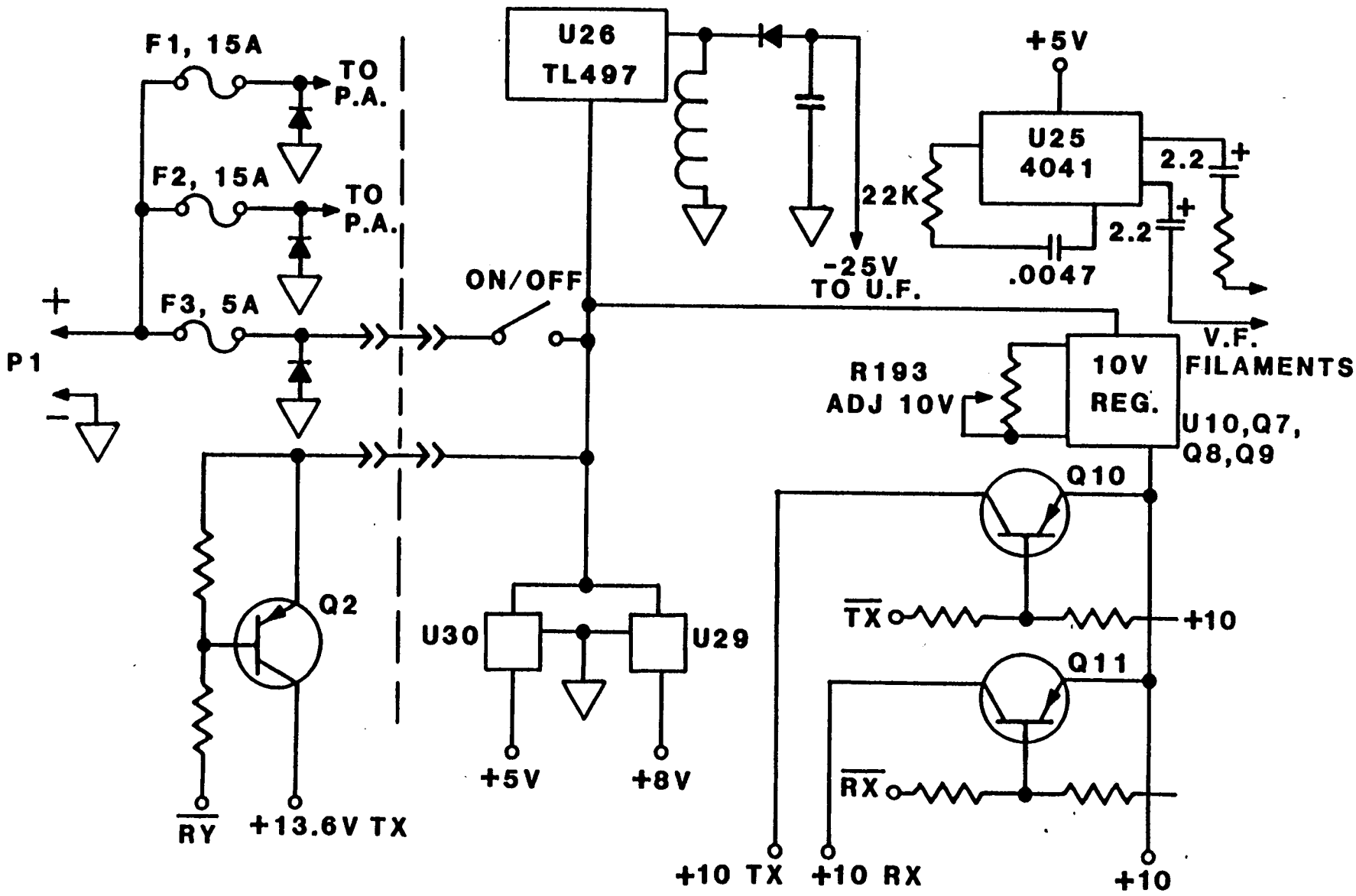

FIGURE 7.1.1

SIMPLIFIED DIAGRAM OF
POWER SUPPLY CIRCUITRY

SEA 222

The +10 Volt Rx and Tx busses are generated through computer control of inverted transistor switches, Q10 and Q11, while the +13.6 Volt Tx buss is generated on the PA/Filter board through computer control of switching transistor Q2.

The +8 Volt and +5 Volt logic buss voltages are generated from the switched +13.6 Volt buss through the use of standard three terminal regulators, U29 and U30.

7.1.2 +10 VOLT REGULATOR AND THE Tx/Rx SWITCHES

The +10 Volt regulator in the SEA 222 makes use of the PNP power transistor as a series pass device. This transistor, Q7, is connected as an inverted power stage with its base drive derived from a negative feedback amplifier consisting of Q8 and Q9.

In operation, the base of emitter follower Q9 is provided with a sample of the +10 Volt regulator output through resistor network R193, R194. This sample is supplied to the emitter of feedback amplifier Q8.

The base of Q8 is provided with a stable reference voltage from zener diode CR30. This device has a nearly "flat" temperature vs voltage characteristic and is further stabilized by obtaining its voltage drive from the +10 Volt buss.

Since the base voltage of Q8 is stabilized by CR30, the collector current in Q8 and thus the base current of the series pass transistor Q7 is inversely proportional to the voltage at the base of Q9. That is, a RISE in the voltage at the base of Q9 causes a REDUCTION in base drive to Q7. This in turn causes the output voltage to be reduced. Similarly, a DROP in the voltage at the base of Q9 will result in an INCREASE in base drive to Q7 which causes the output voltage to be increased.

R189 is shunted across Q7 to provide "start up" voltage for the regulator system. Potentiometer R193 is the +10 Volt adjustment and allows the regulator to be "trimmed" to exactly +10 Volts by setting the base voltage on Q9. Resistor R190 is provided to limit the base drive to Q7. This provides a degree of short circuit immunity for the regulator, since the base drive for Q7 tends to "starve off" at about 1 Amp of output current.

The use of the inverted PNP transistor, Q7, as the series pass device has the advantage that the regulator will remain operational under low line voltage conditions. The low line limits are primarily a function of the E-C saturation voltage in Q7, which is normally less than 0.5

Volts. Thus, the regulator will provide excellent 10 Volt buss stability, even when the input line voltage has dropped to approximately 10.5 Volts.

Transistors Q10 and Q11 generate the non-overlapping +10 Rx and +10 Tx busses, respectively. These devices are operated as inverted transistor switches and are controlled by the main control computer through the serial relay driver device, U1. U1 is located on the PA/Filter printed circuit board. The use of transistor switches to generate the Tx and Rx buss voltages eliminates any problems with relay contacts or T-R buss timing.

7.1.3 +8 VOLT AND +5 VOLT REGULATORS

In the SEA 222, the synthesizer circuitry operates from a regulated +8 Volt buss, while the control computer operates from a regulated +5 Volt buss. These voltages are provided by standard three terminal voltage regulator integrated circuits, U29 and U30. U29 is a 7808 and provides the +8 Volt buss, while U30 is a 7805 and provides the +5 Volt buss.

7.1.4 VF DISPLAY/DISPLAY DRIVER -25 VOLT SUPPLY

The eight character alphanumeric VF display used in the SEA 222 requires a well regulated negative power supply for correct operation. This voltage is provided by the components associated with switching regulator integrated circuit, U26. L17 is the "ringing choke" in a standard switching inverter/regulator, with the output voltage being "dumped" into C156 through diode CR28. Resistors R160 and R161 set the output voltage at approximately -25 Volts DC. Zener diodes CR27 and CR32 are used to set the correct operating voltage levels on the display and display driver chip, U24. The -25 Volt inverter operates from the +13.6 Volt switched buss.

7.1.5 VF DISPLAY FILAMENT OSCILLATOR

VF displays require an alternating current filament supply in order to avoid "shading" effects. In the SEA 222 this need is supplied by the quad CMOS buffer, U25. This chip operates as a free running oscillator/buffer, and supplies a 5 Volt P-P square wave output which is capacitively coupled to the display filament circuit through C160 and C161. The frequency of oscillation is controlled by R168 and C159. The frequency of oscillation is chosen to prevent "strobing" of the display. Strobing is often caused by interaction of the filament supply voltage with the natural refresh rate of the display.

7.1.6 +13.6 VOLTS Tx BUSS

The transmitter predriver circuitry and the bias systems for the transmitter driver are supplied with a relatively high current +13.6 Volt buss through PNP switch, Q2. This transistor is located on the PA/Filter board and is connected as an inverted switch. Base drive is supplied from the relay control driver, U1. The same driver port which is used to prove base drive to Q2 is also used to switch the antenna circuit T/R relay, K1. Diode steering through CR4 and CR11 prevents interaction between the relay and transistor circuits.