Edson

EDSON PEDESTAL MAINTENANCE GUIDE

This guide has been prepared to assist you in the proper maintenance of your Edson Steering System. To properly maintain the moving parts in the top of the pedestal, it is necessary to remove the compass and its cylinder. For proper alignmment when re-installing the compass, we recommend placing 3 or 4 lengths of tape on the pedestal and compass as shown below. Slit the tap when removing compass, align the strips of tape when re-installing the compass for visual compass re-alignment. Your compass MUST then be check for accuracy.

Lubrication of needle bearings should be done by squeezing Edson Fig. #827 Teflon Lubricant into the holes located on top of the bearing housings inside the pedestal bowl. Spin the wheel when squeezing the lubricant in to make sure the entire bearing is serviced. Winch grease or water pump grease can be used as an alternative, but don't let the bearings run dry. Do not over grease as it will run onto the brake pads. Oil the chain with #30 weight motor oil. Do not grease chain as it does not penetrate the links.

Inspect the condition of the wire, tension of the wire and lightly oil. Edson recommends placing about 5 layers of "Kleenex" on the palm of your hand, squirt oil on the tissues and lightly oil the wire. This will lubricate the strands but will also "flag" a broken or hooked strand by tearing off a small section of tissue. If you do have a wire break, replace the wire immediately. See Edson Fig. 775 wire and chain replacement kits. (Caution: Wire splinters can cause painful cuts.) Replace the wire after 5 years. If still good, keep the old wire on board as a spare.

To check for proper wire tension, lock the wheel in position by using the pedestal brake, or by tying off the wheel. Cable tension is best when you cannot move the quadrant or drive wheel by hand with the wheel locked in place. Over tightening will greatly reduce the sensitivity of the system.

It must be emphasized that all on board must be familiar with the care and operation of the Steering System and engine controls. One person must be assigned the job of maintenance and must be thoroughly familiar with the operation and intent of all the equipment. If at any time your Steering System makes strange noises or reacts differently than it has previously, you must find the causes immediately and correct the problem.

Screws, nuts, bolts as well as clevis and cotter pins that are part of the steering system, engine controls, or pedestal accessories must be check regularly for tightness and wear. Failure to inspect all steering parts, engine controls and pedestal accessories may cause loss of control or failure of the engine or steering system. *All boats must have an emergency tiller or its equivalent and all on board must be familiar with its location and operation. An emergency tiller drill is just as important as a man-overboard drill and must be regularly conducted.*

On a new boat and at least once a year, inspect the system when under a strong load. On a calm day and under power, go away from the other boats and with the person who is assigned the maintenance watching from below, put the wheel hard over at full throttle. The maintenance man should watch carefully for all parts of the system bending, distorting, creaking, or giving any indication of failing if placed under a heavy load for a period of time. If for any reason, something did fail or needs adjusting the day is early and you will have plenty of time.

When leaving your boat at her mooring or slip, make sure that your wheel is properly tied off. DO NOT LEAVE THE STEERING SYSTEM TO FREE WHEEL.

The pedestal exterior should be cleaned with detergent and water, do not use acetone or/and any other strong solvents as they may damage the finish. Edson will be pleased to assist you. Call us or write us if we can help.

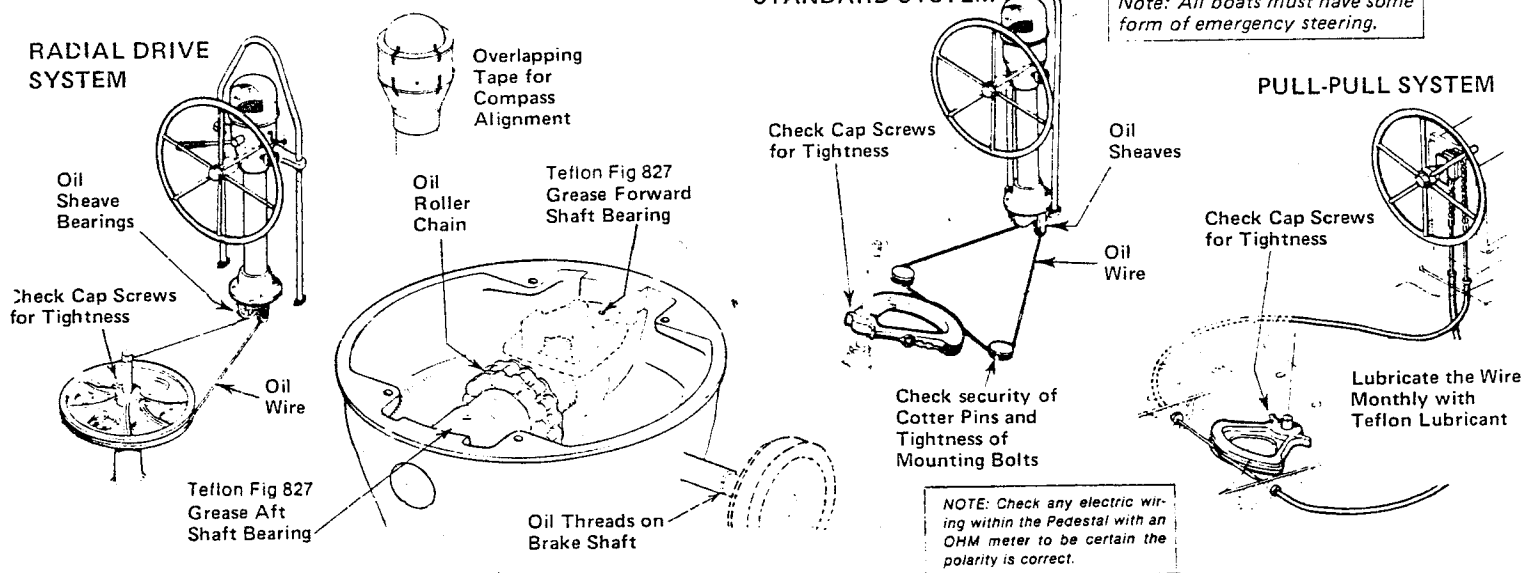

LUBRICATION RECORD

component	lubricant	schedule	first year 19__	second year 19__	third year 19__	fourth year 19__	fifth year 19__
sheave bearings	#30 oil*	check and oil monthly					
pull-pull cables	Teflon Fig 827	check and grease monthly					
wire rope	#30 oil*	check and oil annually					
roller chain	#30 oil*	check and oil annually					
pedestal shaft bearings	Teflon Fig 827	check and grease annually					

*Any light oil is suitable. We recommend #30 weight motor oil since most boat owners have it aboard

Caution: 1.) On extended voyages your steering system should be inspected each day and lubricated weekly. Carefully inspect your steering system at least one week before a vacation cruise to avoid last minute maintenance.
2.) When the boat is unattended secure the wheel with the brake or a line. In rough weather the rudder can swing violently from stop to stop causing damage.

For complete maintenance information please contact

Edson International

The Edson Corporation
460 Industrial Park Road
New Bedford, Mass. 02745

Telephone (617) 995-9711
Telex 95-1337

Edson

CUSTOMER SERVICE

PARTS LIST / EDSON PEDESTAL STEERING ASSEMBLY

As a further service to our customers we have illustrated a parts breakdown showing the design and construction of your Edson Pedestal Steerer. These parts drawings will assist you in the proper maintenance of your steering system.

If disassembly should become necessary the following instructions will provide a simple but precise method of removing and replacing the steering shaft and its components.

DISASSEMBLY

1. With the wheel and brake assembly removed, replace the wheel nut with any standard thread ¾" or 1" hex nut.
2. Loosen the steering cables and chain by backing off the take-up eyes at the Quadrant or Radial Driver, lift the chain off the sprocket and tie to the forward part of the bowl.

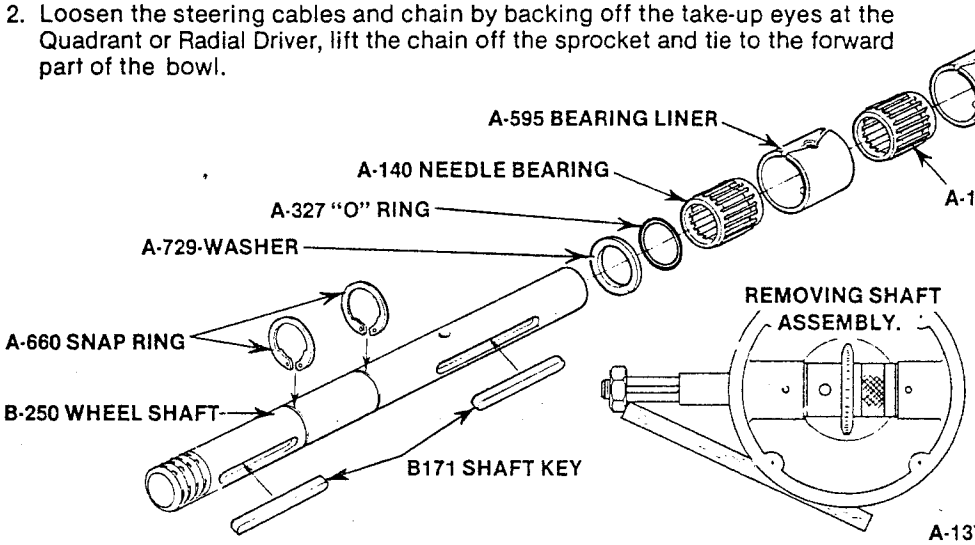

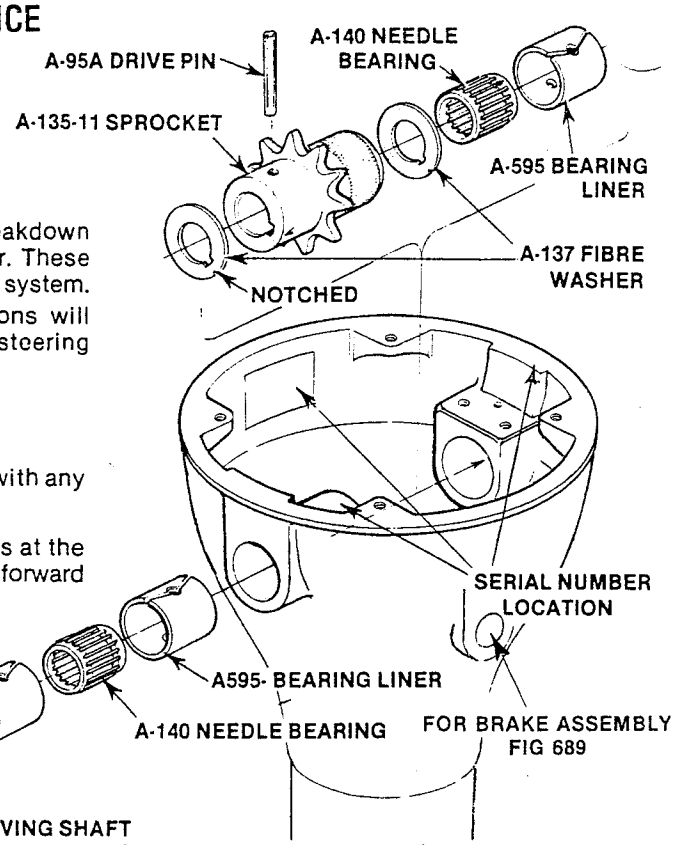

MODEL 400 PEDESTALS

3. Align the notch in the aft fibre washer with the "V" stamped on the sprocket.
4. Carefully drive the pin out of the sprocket (drive from the round end toward the grooved end).
5. With a piece of wood against the ¾" or 1" hex nut, gently tap the wheel shaft from the housing, see illustration above, be careful not to drop the shaft components into the pedestal.
6. Remove sprocket, two fibre washers and forward needle bearing.
7. Remove aft needle bearing and washers.
8. Wipe out any dirt or old grease before reassembly.

To reassemble reverse the above procedure, do not grease the bearings until reassembly is completed.

NOTE: Check your compass for possible readjustment.

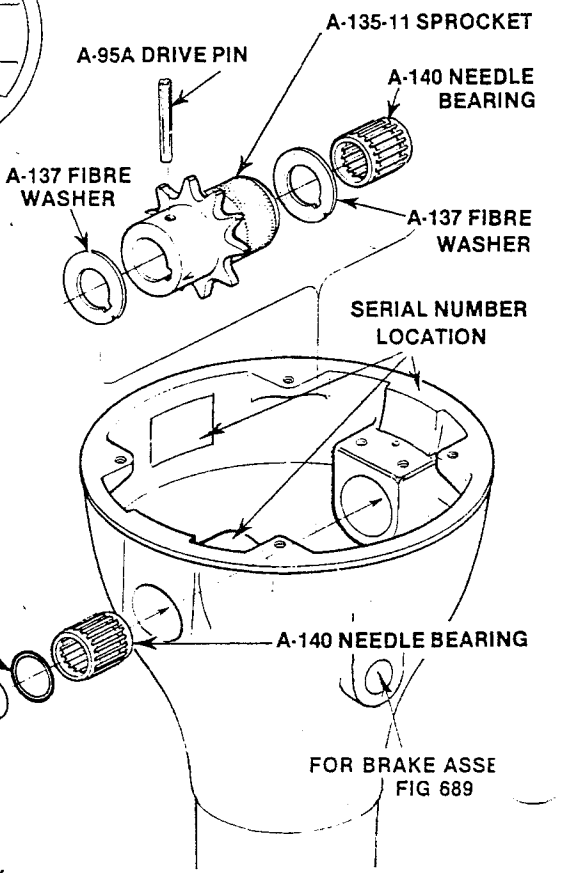

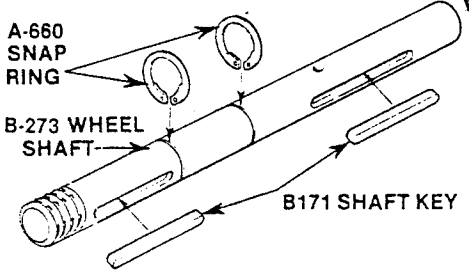

MODEL 334 & 335 PEDESTALS

ORDERING INSTRUCTIONS

When ordering spare parts give the pedestal serial number, part number, part name, and quantity. Your order will be filled promptly.

If you have any question don't hesitate to call the Edson factory. We will be pleased to assist you.

Copyright 1982
Telephone (617) 995-9711