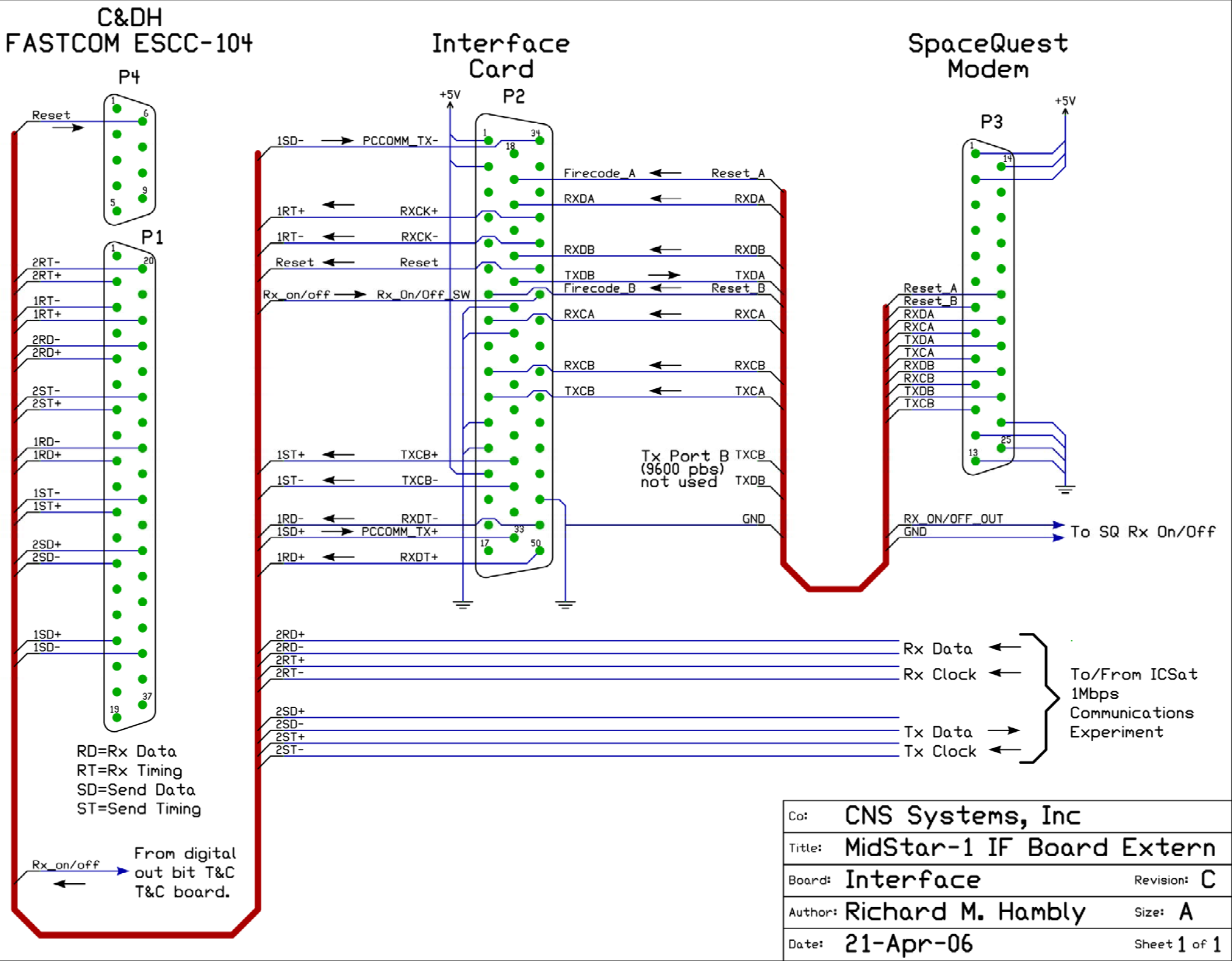

Co:	CNS Systems, Inc		
Title:	MidStar-1 IF Board Extern		
Board:	Interface	Revision:	C
Author:	Richard M. Hambly	Size:	A
Date:	21-Apr-06	Sheet 1 of 1	

MidStar-1 RF Configuration

CNS Systems, Inc.
Communication, Navigation and Surveillance

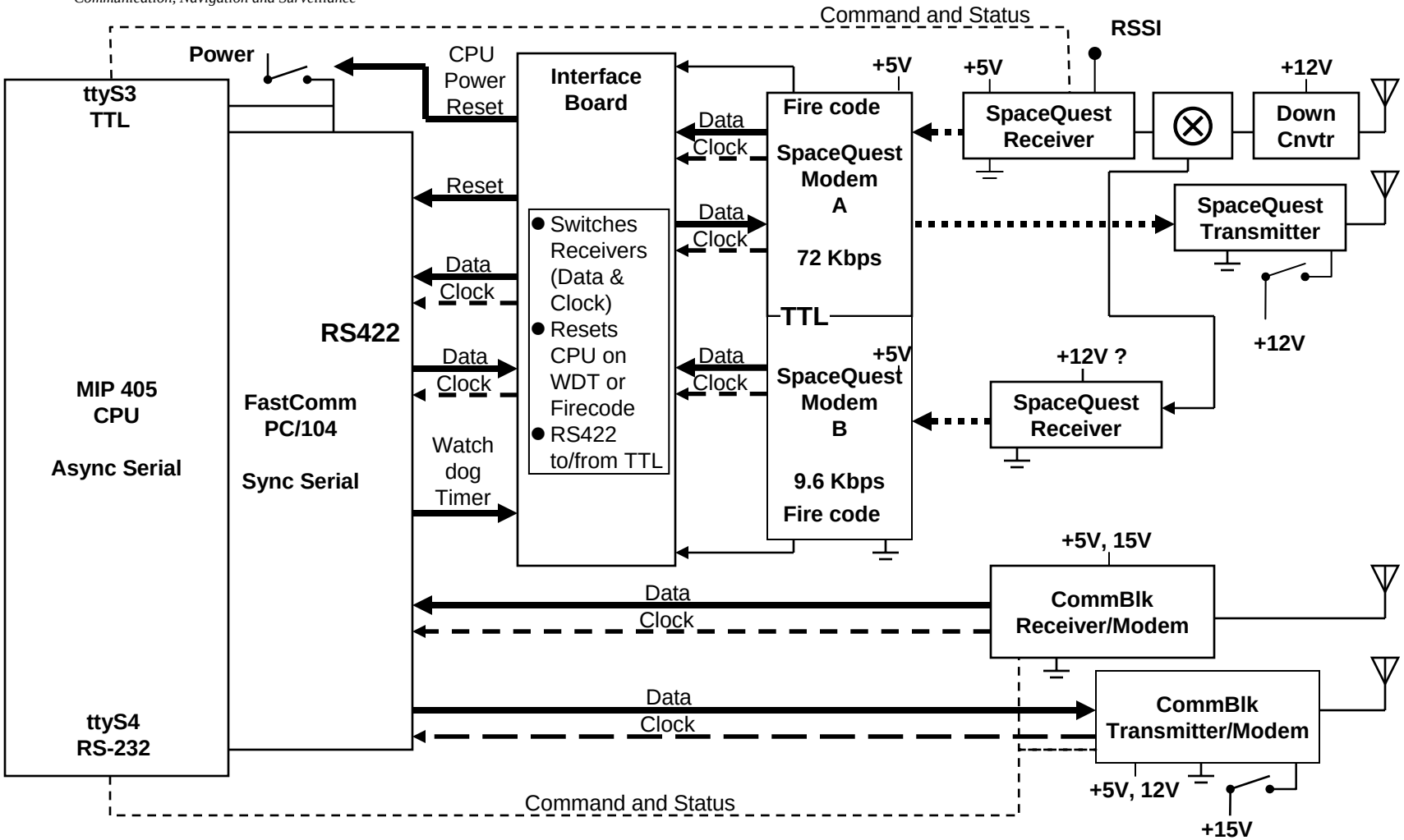

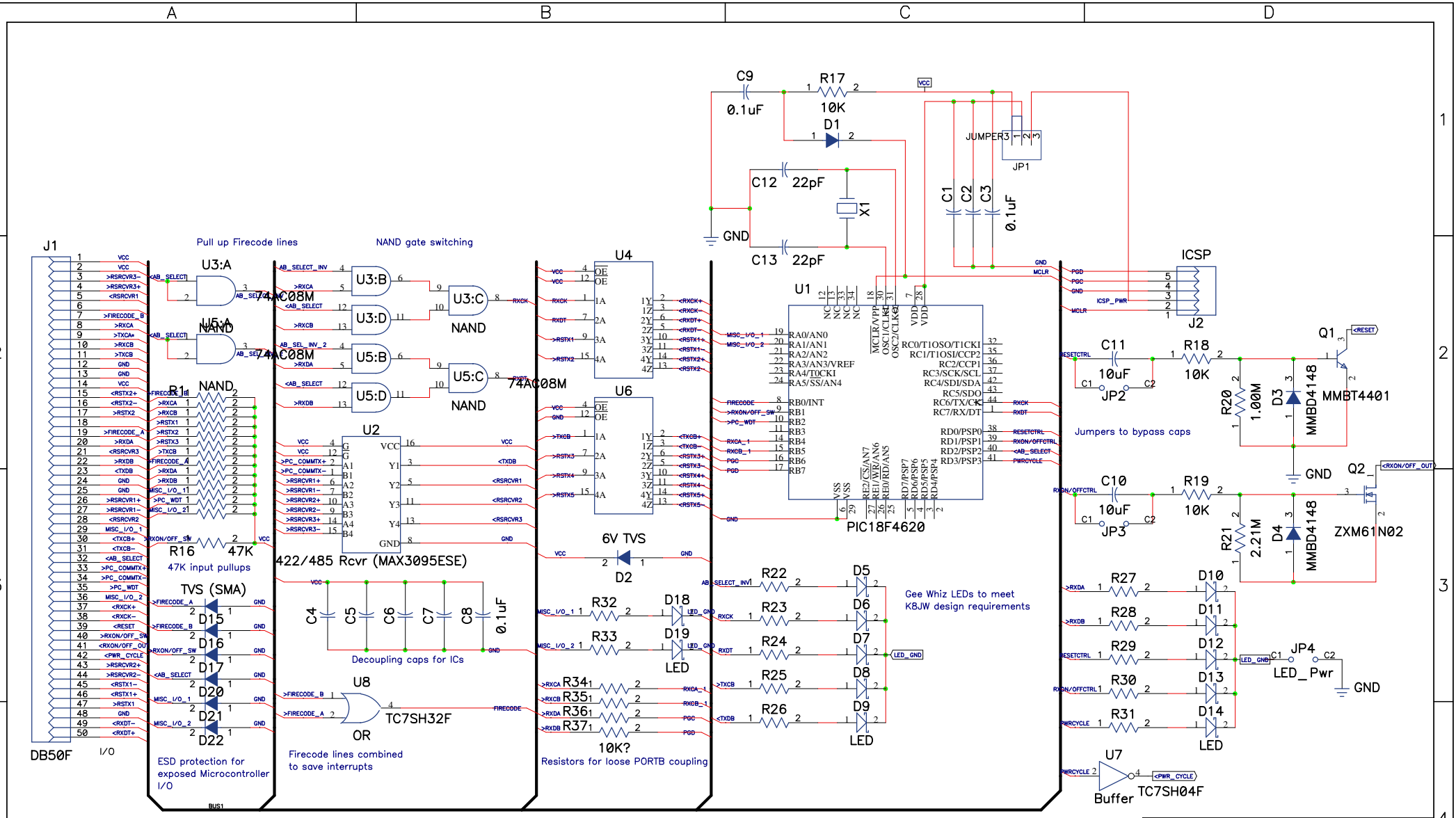

Title	USNA_IF_Board	
Size B	Number Q Systems Engineering, Inc.	Rev 1.00
Date		Drawn by Phil Quesinberry
Filename		Sheet 1 of 1

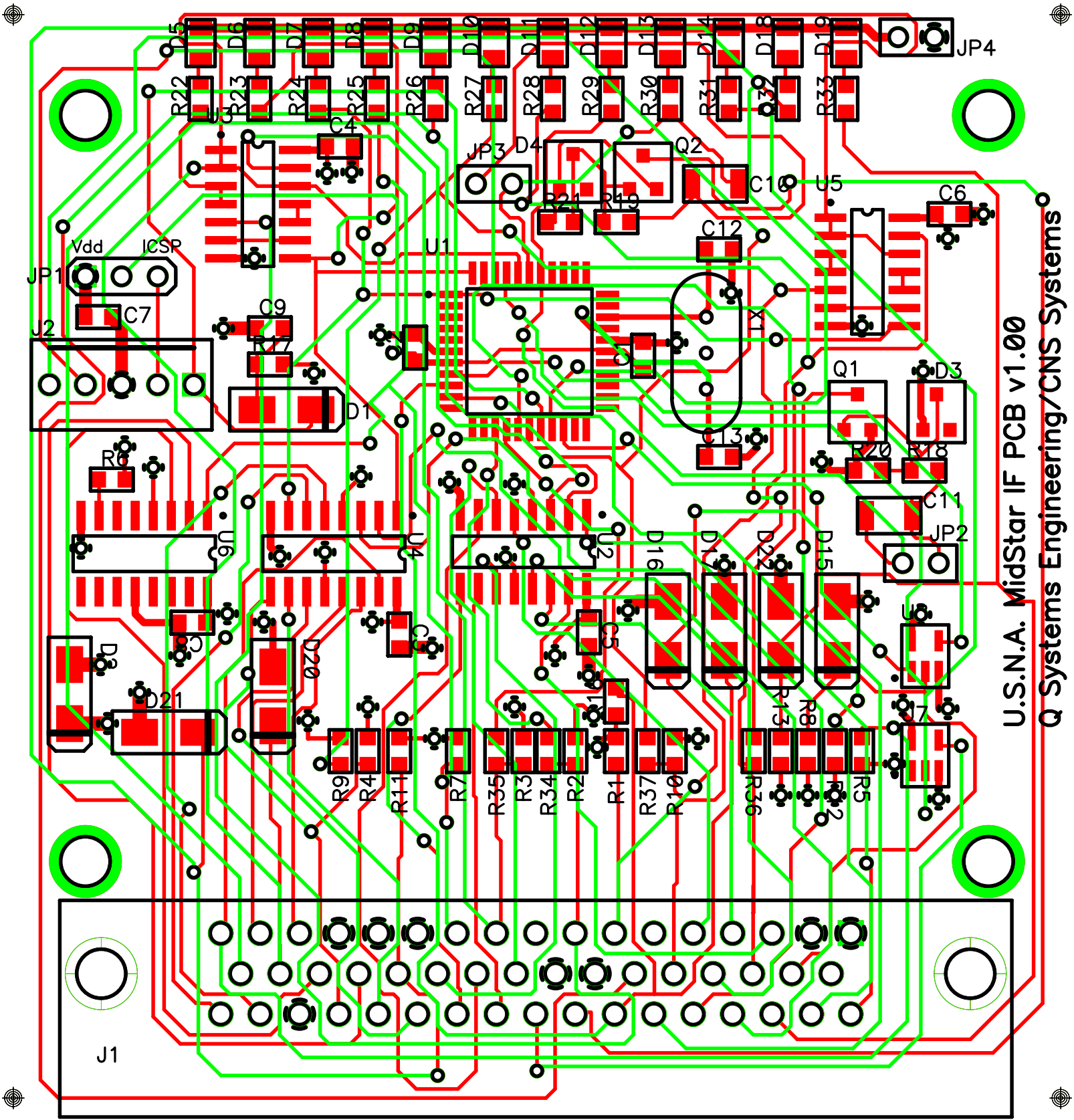
U.S.N.A. MidStar IF PCB v1.00
Q Systems Engineering/CNS Systems
JP1
Vdd
ICSP
J2
J1
JP2
JP3
JP4
U1
U2
U3
U4
U5
U6
U7
Q1
Q2
D1
D3
D4
D5
D6
D7
D8
D9
D10
D11
D12
D13
D14
D15
D16
D17
D18
D19
D20
D21
D22
C1
C2
C3
C4
C5
C6
C7
C8
C9
C10
C11
C12
C13
X1
R1
R2
R3
R4
R5
R6
R7
R8
R9
R10
R11
R17
R18
R19
R20
R21
R22
R23
R24
R25
R26
R27
R28
R29
R30
R31
R32
R33
R34
R35
R36
R37