DoD Space Test Program

Secondary Payload Planner's Guide
For Use On The
EELV Secondary Payload Adapter

Version 1.0

8 Jun 01

Table of Contents

1 ESPA OVERVIEW 4

1.1 DOCUMENT OVERVIEW 4
1.2 SYSTEM OVERVIEW 4
1.3 OVERVIEW OF SECONDARY SATELLITE CONSTRAINTS AND SERVICES 5
1.3.1 Constraints 5
1.3.2 Services 5
1.4 REFERENCE DOCUMENTS 5
1.5 ACRONYMS 6

2 ESPA SECONDARY PAYLOAD INTERFACES 7

2.1 SECONDARY PAYLOAD COORDINATE SYSTEM 7
2.2 MASS VS. CG REQUIREMENTS 8
2.3 SECONDARY SATELLITE VOLUME 9
2.3.1 Lockheed Martin EELV Secondary Payload Available Volume 9
2.3.2 Boeing Company EELV Secondary Payload Available Volume 11
2.4 MECHANICAL INTERFACE 13
2.5 ELECTRICAL INTERFACE 14
2.5.1 Flight Command Interfaces Description 14
2.5.2 Separation Ordnance, Power, and Circuits 14
2.5.3 Ground Umbilical Lines 15
2.5.3.1 Power 15
2.5.3.2 Ground Monitoring 15
2.5.4 Grounding, Bonding, and Referencing 16
2.5.5 Interface Connector Bonding 16
2.5.6 Chassis Ground Current 16

3 ENVIRONMENT 17

3.1 PRE-LAUNCH 17
3.1.1 Thermal / Humidity 17
3.1.2 Contamination 17
3.2 LAUNCH 17
3.2.1 Electomagnetic Compatibility 17
3.2.1.1 SV Radiation Narrowband 17
3.2.1.2 SV Radiation Broadband 18
3.2.2 Thermal 18
3.2.3 Acceleration Load Factors 19
3.2.4 Vibration 19
3.2.5 Acoustics 19
3.2.6 Shock 21
3.2.7 SPL Fundamental Frequency 21

4 MISSION INTEGRATION AND DOCUMENTATION 22

4.1 MISSION INTEGRATION 22
4.2 MISSION ANALYSES 22
4.2.1 Coupled Loads Analysis (CLA) 22
4.2.2 RF Compatibility Analysis 22
4.2.3 Thermal Analysis 22
4.2.4 Separation and PLF Clearance Analysis 23
4.2.5 Acoustic Analysis 23
4.2.6 Payload Fairing Venting Analysis 23
4.2.7 Mission Analysis 23
4.2.8 Range Safety Analysis 23

4.2.9 EMI/EMC Analysis *23*
4.2.10 Post-flight Data Analysis *23*
4.3 DOCUMENTATION 23
4.3.1 Overall Documentation Requirements *24*

5 SAFETY 26

5.1 SAFETY REQUIREMENTS 26
5.2 DOCUMENTATION REQUIREMENTS 26
5.2.1 Missile System Pre-launch Safety Package (MSPSP) *26*
5.2.2 Secondary Spacecraft Launch Site Procedures *26*
5.2.3 Radiation Data *26*
5.2.4 Radio Frequency (RF) Data *26*
5.2.5 Other Data *27*

6 LAUNCH FACILITIES AND OPERATIONS 28

APPENDIX A – SPACECRAFT QUESTIONNAIRE 29

LIST OF FIGURES

FIGURE 1 FULLY LOADED ESPA STACK ON EELV ILLUSTRATION 4
FIGURE 2 ESPA SOLID MODEL 7
FIGURE 3 ESPA SECONDARY PAYLOAD COORDINATE SYSTEM 8
FIGURE 4 STANDARD VEHICLE COORDINATE SYSTEM FOR EELV 8
FIGURE 5 ALLOWABLE SPACECRAFT MASS AND CENTER-OF-GRAVITY ON ESPA 9
FIGURE 6 TOP VIEW OF ESPA VOLUMES FOR ATLAS-V 400 SERIES LV 10
FIGURE 7 SIDE VIEW FOR STANDARD ESPA SATELLITE VOLUME ON ATLAS-V 400 SERIES LV 10
FIGURE 8 SIDE VIEW FOR LIMITED-SIZED ESPA SATELLITE VOLUME ON ATLAS-V 400 SERIES LV 11
FIGURE 9 TOP VIEW OF ESPA VOLUMES FOR DELTA-IV LV 12
FIGURE 10 SIDE VIEW NUMBER 1 OF ESPA VOLUMES FOR DELTA-IV LV 12
FIGURE 11 SIDE VIEW NUMBER 2 OF ESPA VOLUMES FOR DELTA-IV LV 13
FIGURE 12 ESPA SECONDARY PAYLOAD INTERFACE 13
FIGURE 13 MAXIMUM ALLOWABLE NARROWBAND SV RADIATED E-FIELDS 18
FIGURE 14 MAXIMUM ALLOWABLE BROADBAND SV RADIATED E-FIELDS 18
FIGURE 15 MAXIMUM PLF INNER SURFACE TEMPERATURES 19
FIGURE 16 EELV MAXIMUM SHOCK LEVELS 21

LIST OF TABLES

TABLE 1 PL MAXIMUM ACOUSTIC LEVELS 20
TABLE 2 EELV MAXIMUM SHOCK LEVELS 21
TABLE 3 TYPICAL DOCUMENTATION REQUIREMENTS FOR SECONDARY SATELLITES 24

1 ESPA Overview

1.1 Document Overview

The Evolved Expendable Launch Vehicle (EELV) Secondary Payload Adapter (ESPA) Secondary Payload Planner's Guide is published by the Space Test Program (STP) Office, Space and Missiles System Center, Kirtland AFB, NM, to provide interface information for secondary satellites. This document is a single source reference and detailed specifics of The Boeing Company's and Lockheed Martin's EELVs can be obtained in each launch vehicle providers Planner's Guides.

Note that when secondary payloads are mentioned, this refers to the actual secondary satellites and these terms are interchangeable throughout this document. The term secondary payload does not refer to any type of experiment on the satellite, but the satellite itself.

1.2 System Overview

ESPA is a developmental product by AFRL and SMC/TE to provide optional transportation for up to six secondary payloads (SPLs) as a ride-along on the EELV as shown in Figure 1. The SPLs are mounted radially on the EELV Secondary Payload Adapter (ESPA), which is 24 inches high. ESPA is installed between the EELV-Medium (62.01" diameter bolt pattern) Standard Interface Plane (SIP) and the primary payload, passing EELV electrical and mechanical interfaces to the primary payload in a configuration identical to that of the baseline EELV. It provides all required thermal, mechanical, and electrical interfaces to the secondary payloads (SPLs) in conjunction with the basic launch service.

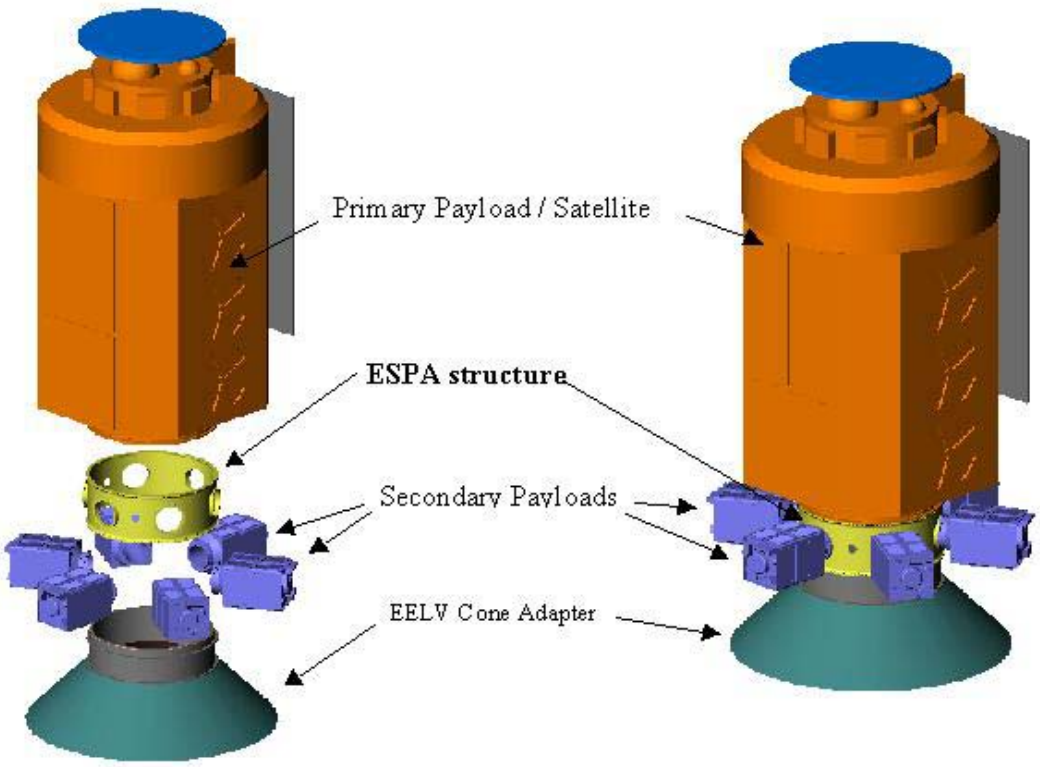

Figure 1 Fully Loaded ESPA Stack On EELV Illustration

Each SPL is deployed from the ESPA at a predetermined point along the primary mission trajectory. SPLs are deployed on a strict basis of non-interference with the primary mission.

1.3 Overview of Secondary Satellite Constraints and Services

This section highlights the ESPA services provided by STP and describes the constraints that each secondary payload must abide by. Strict adherence to these constraints and services need to be met during the initial ESPA flights.

1.3.1 Constraints

1. Acceptance of the secondary payload is subject to approval of STP and the primary payload SPO.
2. The secondary payload shall not affect the primary payload's mission orbit requirements
3. STP will manifest the SPLs and ensure they meet the mission integration schedule. The secondary payloads shall meet all mission schedules and shall not impact the primary payload in any negative manner. That is, the primary payload drives the launch schedule and the secondary payloads must meet this schedule. The secondary payloads should be ready to enter the mission specific (typically 36 month) integration schedule per the mission unique LV schedule.
4. Manifesting of secondary payloads will be considered only for those EELV missions that have excess performance and weight margin. STP may withdraw secondary payloads if any of these margins are unexpectedly reduced.
5. "Space-qualified" mass models may be required should the secondary payload not be available for flight.
6. The secondary payload shall not present any hazard to the primary payload in the form of EMI radiation, contamination, ordnance, etc., and shall be un-powered or in quiescent mode during flight. Mission specific exceptions may be coordinated through STP.
7. In order to keep ESPA balanced, secondary payloads may be given a mass target (determined by STP) that must be met (vs. a mass NTE). Major deviations from the pre-determined mass target may not be acceptable.
8. The secondary payloads shall not intrude on the primary payload clearance envelope or the adapter cone clearance envelope. The standard secondary payload static envelope is 24"x24"x38"; this volume includes the entire separation system. Payload volumes exceeding these dimensions will be negotiated with STP.
9. There shall be no standard access to secondary payloads after encapsulation.
10. The secondary payloads are only guaranteed a separation signal. All other electrical interfaces, including umbilical lines, will be negotiated through STP. Payloads shall not require telemetry or commands during launch.
11. The secondary payload must comply with range safety requirements.
12. The secondary payload is responsible for providing a space qualified separation system.
13. The secondary payloads must meet the cleanliness requirement levels of the primary payload, or must be clean to Visible Cleanliness Level II (VC-2), whichever is more stringent.

1.3.2 Services

1. STP will provide the ESPA structure and all mission unique electrical harnesses.
2. STP will provide secondary payload integration support concurrently with primary payload integration.

1.4 Reference Documents

1. EELV Standard Interface Specification – Version 6.0
2. Delta IV Payload Planners Guide – October 1999
   http://www.boeing.com/defense-space/space/delta/delta4/guide/index.htm
3. Atlas Launch System Mission Planner's Guide Atlas V Addendum – January 1999
   http://www.ilslaunch.com/ILS/launch_services/index.html#MISS
4. Atlas Launch System Mission Planner's Guide – December 1998 Revision 7
   http://www.ilslaunch.com/ILS/launch_services/index.html#MISS
5. Eastern/Western Range Regulation (EWR) 127-1
   http://www.pafb.af.mil/45sw/rangesafety/ewr97.htm
6. Configuration Management Plan — ESPA-PLN-001
7. System Specification — ESPA-SPEC-002
8. EELV Secondary Payload Adapter Maximum Predicted Environment — ESPA-SPEC-004

1.5 Acronyms

AFRL	Air Force Research Laboratory
CAD	Computer Aided Drafting
CCAFS	Cape Canaveral Air Force Station
CG	Center-of-Gravity
CLA	Coupled Loads Analysis
EED	Electro-Explosive Device
EELV	Evolved Expendable Launch Vehicle
EGSE	Electrical Ground Support Equipment
EMC	Electromagnetic Compatibility
EMI	Electromagnetic Interference
ESD	Electrostatic Discharge
ESPA	EELV Secondary Payload Adapter
EWR	Eastern/Western Range Regulation
GN_2	Gaseous Nitrogen
GSE	Ground Support Equipment
GTO	Geosynchronous Transfer Orbit
ICD	Interface Control Document
IRD	Interface Requirements Document
LEO	Low-Earth Orbit
LV	Launch Vehicle
LVC	Launch Vehicle Contractor
MSPSP	Missile System Prelaunch Safety Package
NTE	Not To Exceed
PDLC	Preliminary Design Load Cycle
PL	Payload
PLF	Payload Fairing
PPL	Primary Payload
RF	Radio Frequency
RPO	Range Protection Officer
SIP	Standard Interface Plane
SEIP	Standard Electrical Interface Plane
SIS	Standard Interface Specification
SMC/TE	Space and Missiles Systems Center/Test and Evaluation Directorate
SPO	System Program Office
SPL	Secondary Payload
SSIP	Secondary Standard Interface Plane
STP	Space Test Program
SV	Space Vehicle
USAF	United States Air Force
VAFB	Vandenberg Air Force Base
VC-2	Visual Cleanliness Level II
VC-3	Visual Cleanliness Level III

2 ESPA Secondary Payload Interfaces

ESPA is a cylindrical aluminum structure that duplicates the EELV Standard Interface Plane (SIP) for the primary payload, and provides up to six slots for deployment of secondary satellites (or payloads). ESPA is 24 inches high, and is depicted below in Figure 2. ESPA can accommodate secondary payloads weighing up to 400 lbs each, with a 20-inch cg offset from the secondary standard interface plane (SSIP).

Figure 2 ESPA Solid Model

2.1 Secondary Payload Coordinate System

The coordinate system that will be used by the secondary payloads is a right-handed coordinate system with the origin located at the SSIP (the outer edge of the attachment ring for the secondaries) and mid-height of ESPA. The secondary-payload local-coordinate system is depicted below in Figure 3, referenced with respect to the SSIP. The axial, or longitudinal, direction of the secondary payload lies along the separation direction of the secondary payload, with the positive direction starting from the standard interface plane and pointing towards the fairing. This direction will be referred as the $+X_{spl}$, where the subscript "spl" refers to the secondary payload. The $+Y_{spl}$ axis corresponds to the longitudinal (+X axis) of the EELV launch vehicle, or the LV thrust direction. The $+Z_{spl}$ axis finishes the right-handed coordinate system, and is perpendicular to the plane of the $+X_{spl}$ and $+Y_{spl}$.

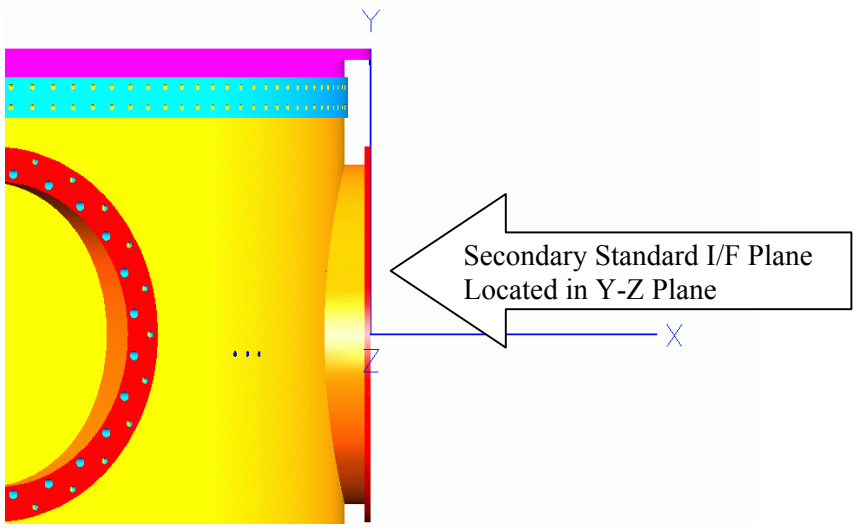

Figure 3 ESPA Secondary Payload Coordinate System

For reference, the EELV standard vehicle coordinate system is shown in Figure 4. The positive X-axis is along the centerline of the vehicle and point toward the nose or top of the LV. Also, the axial axis is defined as the X-axis with the Y-axis and Z-axis denoted by the lateral axes.

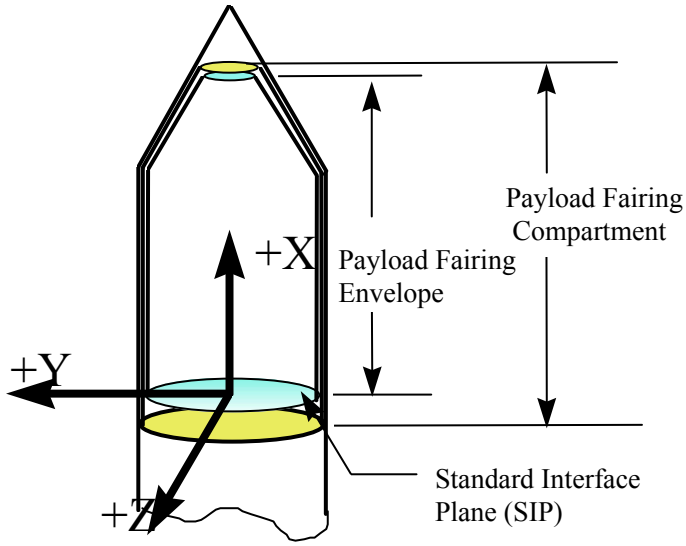

Figure 4 Standard Vehicle Coordinate System for EELV

2.2 Mass vs. CG Requirements

ESPA can accommodate a secondary satellite that has a mass of 400 lbs, with its center of gravity (cg) 20 inches from the secondary standard interface plane. Note that the height of the separation system is included in the 20-inch offset. Figure 5 is a curve of the mass versus cg requirement for secondary payloads.

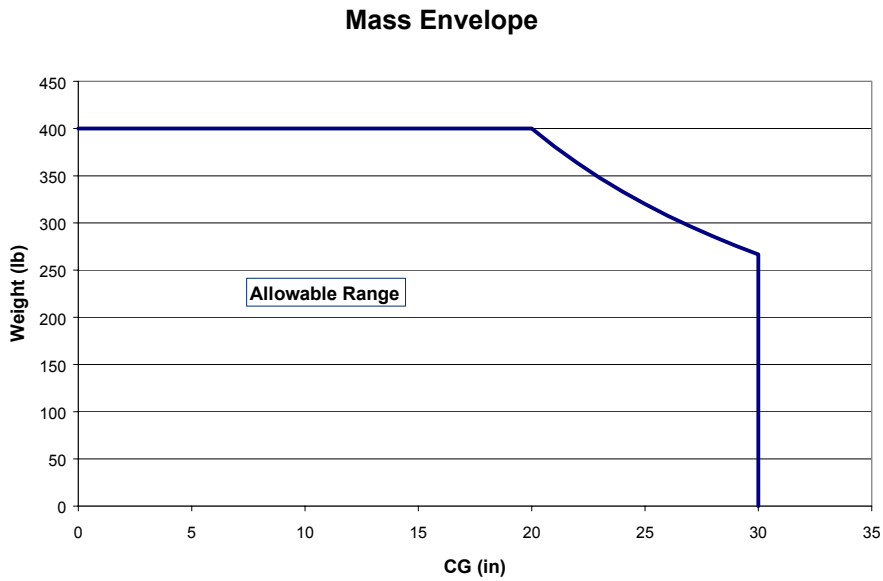

Figure 5 Allowable Spacecraft Mass and Center-of-Gravity on ESPA

2.3 Secondary Satellite Volume

The standard secondary payload volume is 24”x 24” x 38”. The standard ESPA envelope consists of 38 inches along the $+X_{spl}$, 12” in each direction along the $\pm Z_{spl}$ axis centered about the origin, and 12” in the $\pm Y_{spl}$ centered about the origin. The following sections illustrate available volume for each respective LV, which in some cases is slightly larger than the standard envelope. However, prior to manifest on an STP mission, SPL customers must receive permission to design outside of the standard 24”x24”x38” volume. To ensure access to ESPA, it is best to stay within the standard envelope. By designing to the standard envelope, secondary payloads increase their flight opportunities.

2.3.1 Lockheed Martin EELV Secondary Payload Available Volume

The envelope on the Atlas V 400 series LV is constrained by Torus arms, PLF jettison sweep, primary spacecraft envelope, and access requirements. For this LV, ESPA can accommodate up to 4 standard sized ESPA satellites (24” x 24” x 38”) with two other slots limited in the ESPA $+X_{spl}$ direction (24” x 24” x 16”). Figure 6 shows the top view of ESPA and the Atlas V LV Figures 7 and 8 are cross-section views of the same envelopes. For the standard ESPA satellites, the applicable volumes on the Atlas V LV is 24”x30”x38”.In the +X direction of EELV, there is some additional available space for the secondaries but it is not recommended to design for this since the primary satellite can use this space. For the two smaller slots, the volume for a secondary satellite is roughly 24”x30”X16”.

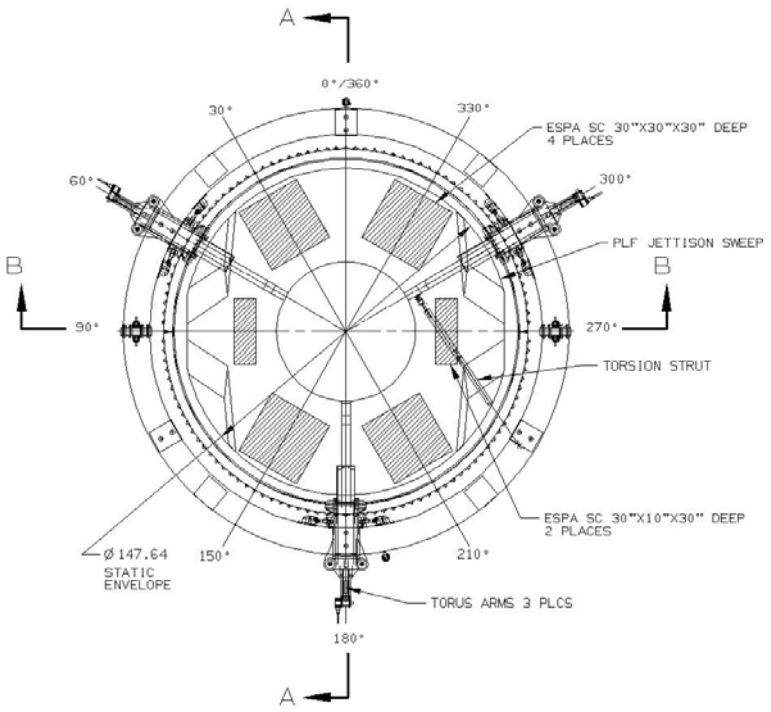

Figure 6 Top View of ESPA Volumes for Atlas-V 400 Series LV

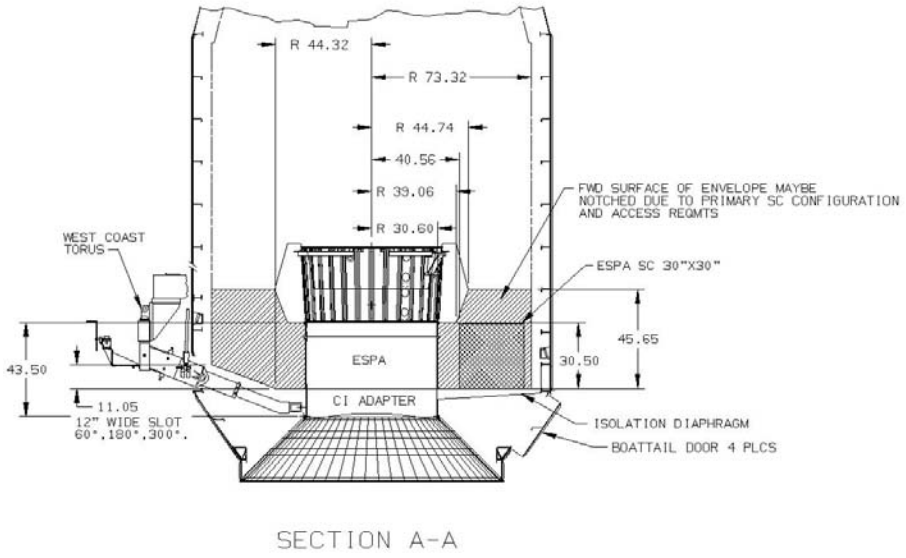

Figure 7 Side View for Standard ESPA Satellite Volume on Atlas-V 400 Series LV

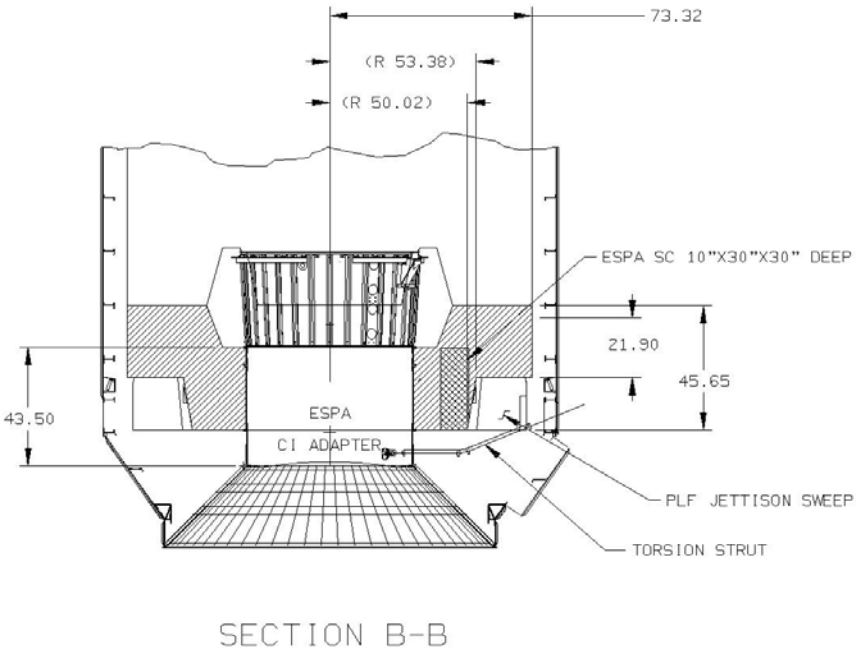

Figure 8 Side View for Limited-Sized ESPA Satellite Volume on Atlas-V 400 Series LV

2.3.2 Boeing Company EELV Secondary Payload Available Volume

The useable ESPA secondary satellite volume on the Boeing Company's Delta-IV is shown in Figure 9; the acceptable volume is basically a pie-shaped volume looking from the top. The side-views of the ESPA volume on the Boeing Company's Delta-IV LV is shown in Figures 10 and 11. For satellites that do not protrude below the standard EELV interface plane (i.e., the bottom flange of ESPA), the usable volume is 24"x28"x38". If the secondary satellite wishes to go below the standard interface plane, care must be taken not to interfere with the SEIP bracket, which is shown in Figure 10. A detailed view of the volume that is available below this standard plane is shown in Figure 11. It is not recommended that the secondary satellites use this volume without significant pre-coordination with STP.

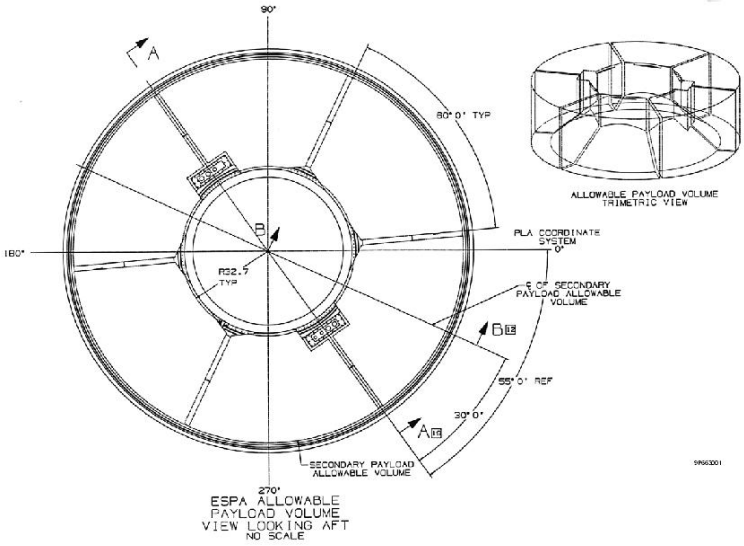

Figure 9 Top View of ESPA Volumes for Delta-IV LV

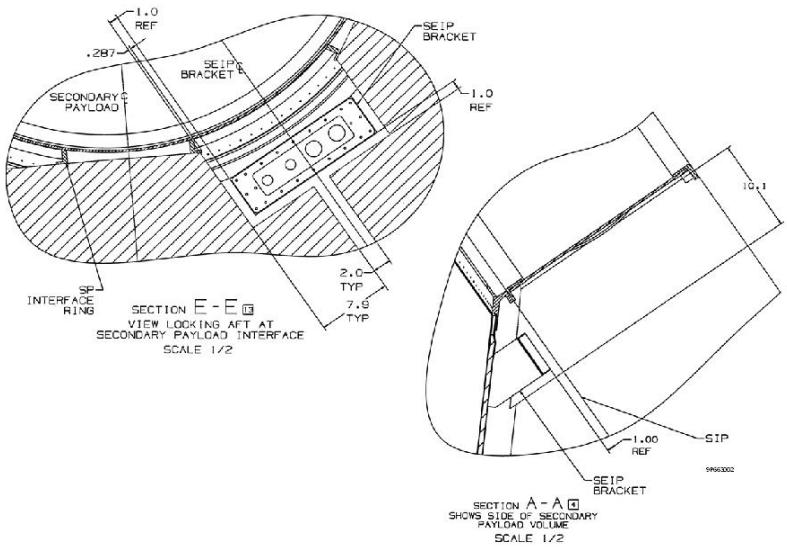

Figure 10 Side View Number 1 of ESPA Volumes for Delta-IV LV

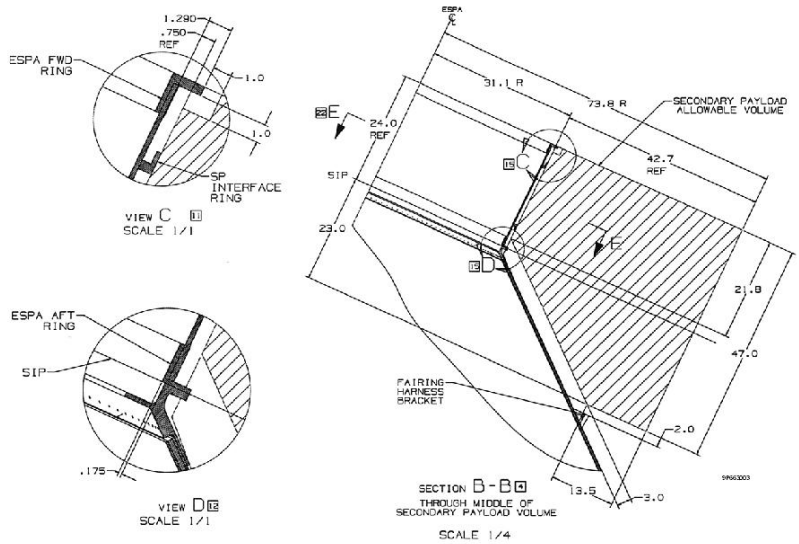

Figure 11 Side View Number 2 of ESPA Volumes for Delta-IV LV

2.4 Mechanical Interface

This section is an overview of the secondary payload mechanical interface provided by ESPA.

The interface for the secondary satellite has been standardized so the integration effort of ESPA on an EELV will be minimized. It is incumbent on each secondary satellite to match the standard interface to their satellite or provide a payload attach fitting from the standard interface to the attachment point of their satellite. A drill template will be provided to ensure a matched a hole patterns.

A detailed view of the Secondary Standard Interface Plane is shown in Figure 12. This plane consists of a flange for the secondary satellites, which is made of forged aluminum. The ring has a diameter of 15 inches from the SSIP center to bolt-hole center. The bolt pattern consists of 24 - 1/4" x 28 holes and are spaced every 15 degrees around the ring. The zero degree (0°) point of the ring lies along the $+Y_{spl}$ direction in the ESPA coordinate system (+X or thrust direction on the EELV coordinate system).

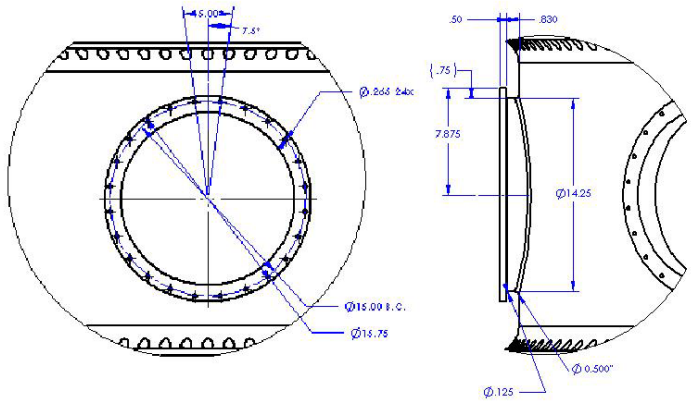

Figure 12 ESPA Secondary Payload Interface

2.5 Electrical Interface

This section is an overview of the *possible* electrical interfaces provided by ESPA to the secondary payloads. The mission specific details will depend on the requirements of the primary payload and will be specified in the mission specific ESPA ICD. The following sections contain details of the command signals, ordnance discretes, and ground umbilical lines the EELV provides to the entire mission as a standard service. Each secondary payload is guaranteed, at a minimum, an ordnance discrete for payload separation. Other signal requests must be coordinated with STP prior to manifest. STP will design and procure the mission-unique harness based on the mission specific ESPA ICD.

ESPA will provide pass through electrical interconnections and cables from the EELV/ESPA electrical interface panel to SPL electrical interfaces and separation systems. Electrical cable harness connector part numbers for the SPL/ESPA interface will be decided on a mission specific basis. If secondary payload manufacturers have a preference as to the connectors to be used, this will be taken into consideration during the ESPA harness design process. ESPA shall provide the mating connector halves to the SPLs at L-6 months to mate to the standard interface panel. This ensures the connectors, pins, and sockets are all procured by the same vendor to the same specification minimizing any potential for a mismate. The ESPA system shall provide umbilical electrical interconnection beginning at T-0 umbilical installation. All SPL-provided signals and power will be handled as unclassified data. At the time SPL/LV electrical connectors are to be separated, the current on any line shall be no greater than 10 milli-amps. This applies to SPL/ESPA interfaces in the T-0 umbilical and in SPL separation connectors.

2.5.1 Flight Command Interfaces Description

All signals shall have a dedicated signal return line which is referenced at the source. The EELV shall provide 8 redundant pairs of control commands that can be configured as 28-volt discretes or switch closure functions. The PPL contractors will select either all discrete commands or all switch closures. **The SPLs will be allowed to use the REMAINING command lines and signal types based on PPL selection.**

The EELV telemetry shall indicate the state of each command. The EELV shall provide the capability to issue the commands in any sequence with a maximum of 10 events per command. An event is defined as the change of state (on or off) of one of the commands. The capability shall be provided to reference the initiation of commands to Upper Stage guidance events, mission times, and/or selected mission scheduled events.

The EELV-provided discrete commands shall have the following characteristics at the Standard Electrical Interface Plane (SEIP):

- Voltage: “On” state +23 VDC minimum to +33 VDC maximum
- Current: 500mA maximum per discrete
- Pulse Width: 10 sec maximum / 20 msec minimum
- The discrete command circuits in the SPL shall be isolated from SPL structure by a minimum of 1 mega-ohm.

The EELV provided switch closure functions shall accommodate the following electrical characteristics at the SEIP:

- Voltage: +22 VDC minimum to +32 VDC maximum
- Current: 1 A maximum
- Pulse Width: 10 sec maximum / 20 msec minimum
- Leakage Current: 1 mA
- The switch closure circuits in the SPL shall be isolated from SPL structure by a minimum of 1megaohm.

2.5.2 Separation Ordnance, Power, and Circuits

Separation ordnance power shall be provided by the EELV to the primary and redundant SPL-provided initiators. The SPLs will be provided remaining ordinance signals from the SEIP. Ordnance signal line availability will be negotiated 24 months prior to ILC. Each SPL separation ordnance circuit (primary and redundant) shall use separate power sources and separation circuits. The EELV ordnance circuits to the SPLs shall be isolated from the SPL

structure by a minimum of 1.0 mega-ohms, with the exception of the Electrical Static Discharge (ESD) protective devices. The firing circuit harnesses shall be shielded to provide a 20 dB minimum margin above the EED's firing threshold. A total of 16 electro-explosive device (EED) firing circuits, 8 primary and 8 redundant, shall be provided by the EELV to the SEIP for both SPLs and PPL. EEDs used will be low voltage, 1 ampere/1 watt no-fire designs that have an internal bridge wire with a resistance of approximately 1.0 ohm.

Both primary and redundant separation ordnance firing signals shall be capable of firing one EED at a time, or up to the whole group of 8 at the same time.

The total allowable SPL resistance for each EED circuit (i.e. from SIP through SPL-adapter to SPL and return to SEIP including EED resistance) shall be in the range of 0.9 to 2.0 ohms. Firing signals shall be a single pulse with a duration in the range of 40 +10 milliseconds. The firing signal current for each EED circuit shall be at least 5.0 amperes (i.e. a total of 40 amperes minimum if firing 8 at the same time). The firing current shall also be limited at any time to 18 amperes maximum for each EED circuit. Primary and redundant firings shall be separated at the SPL's discretion by a duration of either less than 5 milliseconds or 80+10 milliseconds of the leading edges of the firing signals as depicted in Figure 17 of SIS 5.0. The SPLs/integrating contractor will coordinate with the PPL and EELV for the desired firing sequence and firing signal separation based on the CCAM analysis performed by the EELV contractor.

2.5.3 Ground Umbilical Lines

2.5.3.1 Power

The LV and the EELV ground facility shall provide twelve (12) twisted-pairs for SV power that may include external power, full-power battery charging power, trickle battery charging power, or other power as required by the SV.

When used by the SV, each twisted-pair constitutes part of a complete circuit, with a power source in the EGSE room and a load in the SV, and shall meet the following requirements at the SVIP interface:

Source Voltage:	126 VDC maximum
Current:	11 Amps maximum

The maximum round-trip resistance attributed to this cabling between the SEIP and SVIP for any one pair shall be 1.0 ohms, or less, when shorted at the opposite end.

The power return lines at the SV EGSE power source shall be isolated from earth ground by 1 $\pm$ 0.1 megaohm by the SV contractor, and shall be referenced to a single point ground at the SV structure.

2.5.3.2 Ground Monitoring

The LV and the EELV ground facility shall provide 60 shielded twisted-pairs for the differential monitoring of power and sensor loads in the SV by the SV ground equipment in the EGSE room. These pairs may be used to monitor SV bus voltage, battery voltage sense, battery temperature, battery pressure or other payload health measurements as required by the SV. These twisted pairs may also be used to provide commands or additional power from the SV ground equipment to the SV.

When used by the SV, each twisted-pair constitutes part of a complete circuit between the SV and SV ground equipment and shall meet the following requirements at both the SEIP and SVIP interfaces:

Source Voltage:	126 VDC maximum
Source Current:	3.0 Amps maximum

The maximum round-trip resistance attributed to this cabling between the SEIP and SVIP for any one pair shall be 5.0 ohms, or less, when shorted at the opposite end.

Some of the ground monitoring lines may be assigned to carry SV power if the SV Contractor so chooses. In this case the power return lines at the SV EGSE power source shall be isolated from earth ground by 1 $\pm$ 0.1 megaohm

by the SV contractor, and shall be referenced to a single-point ground at the SV structure. All other circuits shall continue to be isolated from earth ground by at least one megaohm.

2.5.4 Grounding, Bonding, and Referencing

Electrical bonding of mechanical interfaces shall be implemented for management of electrical current paths and control of voltage potentials to ensure required system performance, and to mitigate personnel hazards. Electrical bonding provisions shall be compatible with corrosion control requirements. The launch vehicle/payload interface shall provide a conductive path for electrical bonding of the payload to the launch vehicle. The maximum electrical bonding resistance between the SPL/PPL and launch vehicle shall be 2.5 milli-ohms, and shall be verifiable by measurement when they are mated.

2.5.5 Interface Connector Bonding

Connector shells shall be bonded to structure. Bonding resistance at these points shall be 2.5 milli-ohms maximum. The bonding resistance of the cable shield termination path through the mating connector assemblies to the interface shall not exceed 10 milli-ohms, with no more than 2.5 milli-ohms across a single joint.

2.5.6 Chassis Ground Current

Chassis grounds shall not intentionally be used to conduct power or signal currents.

3 Environment

3.1 Pre-Launch

3.1.1 Thermal / Humidity

Thermal / humidity requirements will be determined on a mission unique basis. Secondary payloads will be required to meet thermal / humidity requirements of the primary payload, and of each other (if applicable), while the payloads are stacked together. Further, secondary payloads shall not impose thermal or humidity requirements on the primary payload. Once the payload is encapsulated, the LVC shall maintain the relative humidity within 20%-50% and the temperature within 65°F to 85°F (controllable to ± 5°F) during all phases of transport and hoist.

Following the stack mate to the LV, airflow shall be provided with the following characteristics (EELV SIS 6.0):

- Inlet temperature and relative humidity:
  50-85°F (controllable to ±5° F) with 20-50% relative humidity
  and
  50-70°F (controllable to ±5° F) with 35-50% relative humidity when required for sensitive operations

- Inlet cleanliness: Class 5000 guaranteed (HEPA filters not DOP tested)

- Inlet mass flow rates (air):
  5m PLF: 200-300 lb./min. (controllable to ± 12.5 lb/min.)
  4m PLF: 80-160 lb./min. (controllable to ± 5 lb/min. after start-up period)

- Flow velocity: The payload air distribution system shall provide a maximum air flow velocity less than 32 feet per second (fps) for the 4m PLF in all directions and 35 fps for the 5m PLF in all directions. There will be localized areas of higher flow velocity at, near, or associated with the air conditioning duct outlet. Maximum airflow velocities correspond to maximum inlet mass flow rates. Reduced flow velocities are achievable at lower inlet mass flow rates.

The LVC shall provide for the capability to divert up to 40% of the airflow to the aft portion of the payload envelope.

N_2: Purge of the entire PLF with GN2 prior to launch is not a standard payload service. This type of purge is considered a mission-unique service.

3.1.2 Contamination

Contamination requirements will be determined on a mission unique basis. Secondary payloads will be required to meet contamination requirements of the primary payload, and of each other (if applicable). Further, secondary payloads shall not impose contamination requirements on the primary payload.

3.2 Launch

3.2.1 Electomagnetic Compatibility

3.2.1.1 SV Radiation Narrowband

The secondary payload intentional and unintentional radiated emissions shall not exceed the maximum allowable emissions curve of Figure 13. Information on the SV emitters and receivers (power, frequency, E-field levels, and sensitivity of receivers) shall be supplied to the LVC. The limit applies at the SIP, and shall account for the increased field level caused by radiating inside the fairing cavity. Payload emitter radiation inside an enclosed fairing will create standing waves and exceed the field levels calculated assuming free-space conditions. Payload fairing RF energy focusing shall be considered when determining the maximum field levels at the SIP.

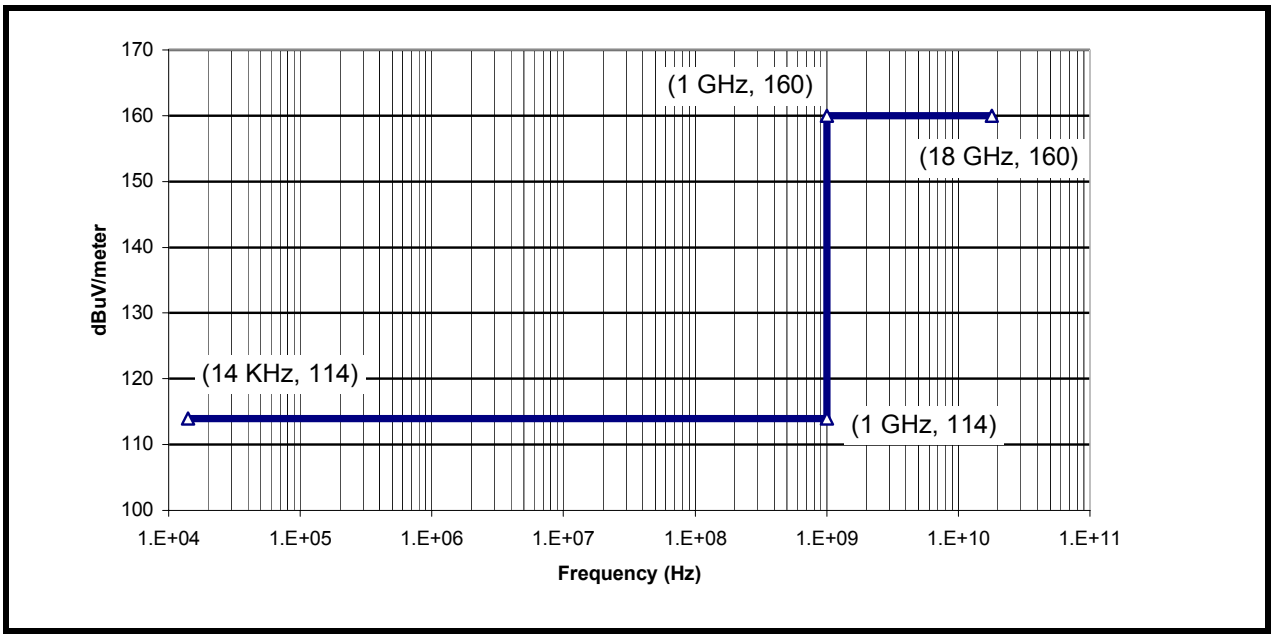

Figure 13 Maximum Allowable Narrowband SV Radiated E-Fields

3.2.1.2 SV Radiation Broadband

The SV unintentional broadband radiated emissions shall not exceed the maximum allowable emissions curve in Figure 14.

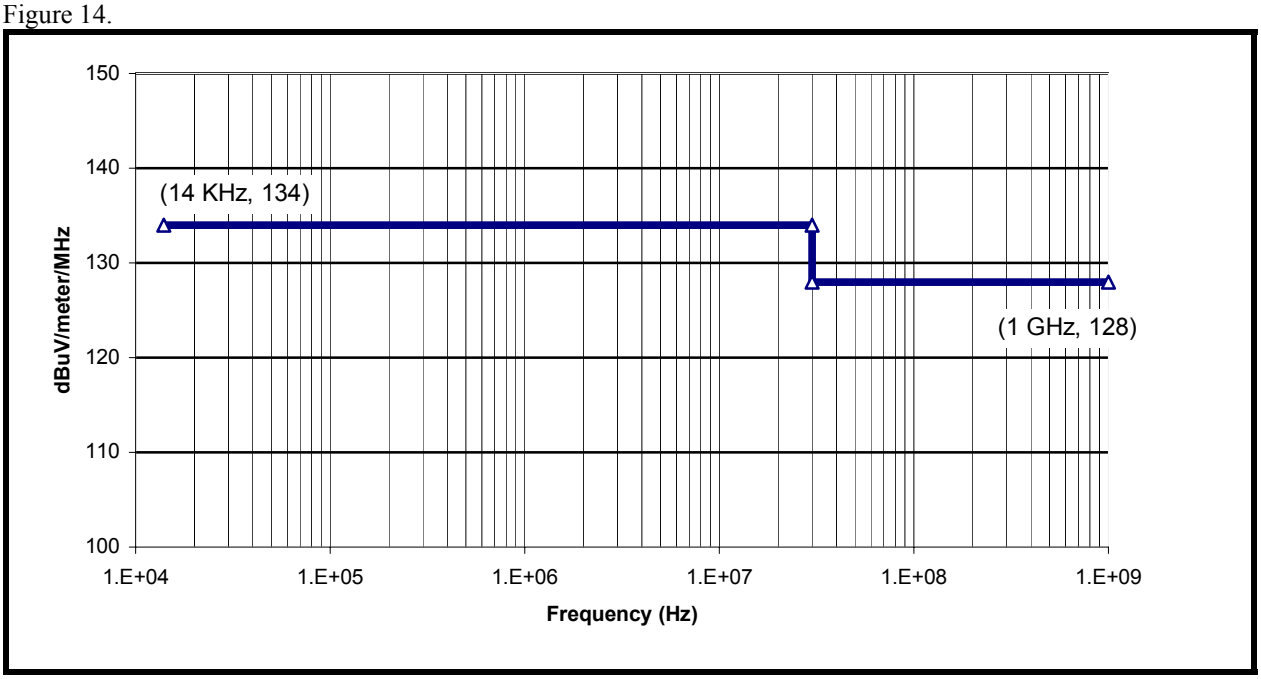

Figure 14 Maximum Allowable Broadband SV Radiated E-Fields

3.2.2 Thermal

Figure 15 shows the maximum expected temperatures of both low emissivity ($e \leq 0.3$) and high ($e \leq 0.9$) surfaces. Because the configuration and emissivity of surfaces may vary between missions, temperatures may exceed those shown. However, according to EELV SIS 6.0, in no case shall the total integrated thermal energy imparted to the PL exceed the maximum total integrated energy indicated by the temperature profile below.

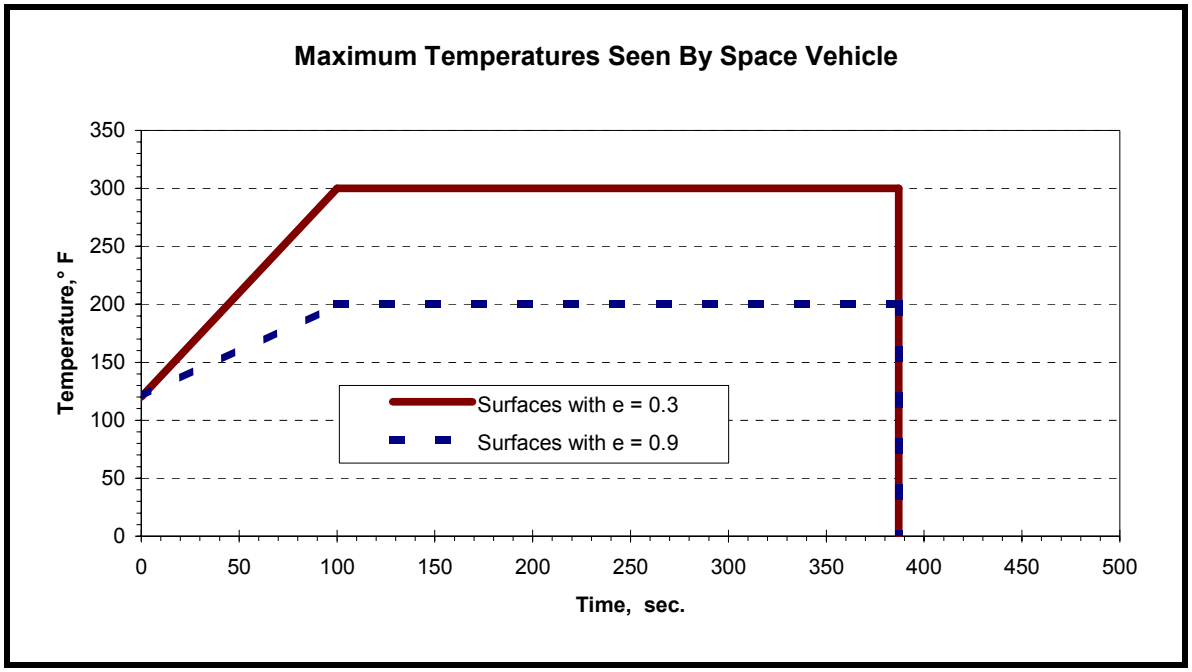

Figure 15 Maximum PLF Inner Surface Temperatures

3.2.3 Acceleration Load Factors

The maximum predicted load factors on secondary payloads (with a 1.25 factor of safety) are expected to be not greater than 10.6 g's in the axial and lateral direction. For design purposes these loads should be applied simultaneously. Therefore, in order to minimize risk on the first ESPA missions, secondary payloads shall be designed to accommodate these load factors, unless otherwise waived by STP.

3.2.4 Vibration

Coupled loads analyses will be performed for each mission, with the results documented in the LV/PL ICD. During early mission planning, STP will typically fund a Preliminary Design Load Cycle (PDLC) analysis with the LV Contractor to assist payloads in the conceptual design phase.

3.2.5 Acoustics

Using a 60 percent cross-section fill factor, Table 1 represents the maximum predicted sound pressure levels (value at 95th percentile with a 50% confidence) from liftoff through primary payload deployment for both medium and intermediate class ESPA payload stacks. The upper bound of the medium class stack is 8,500 pounds to GTO, while 19,000 pounds to GTO marks the upper bound of the intermediate class stack (based on EELV SIS 6.0).

Table 1 PL Maximum Acoustic Levels

1/3 Octave Band Center Frequency (Hz)	Medium Class Stack PL Sound Pressure Level (dB re 20 micropascal)	Intermediate Class Stack PL Sound Pressure Level (dB re 20 micropascal)
32	118.0	122.0
40	123.4	123.7
50	123.0	125.2
63	124.5	126.3
80	126.0	128.0
100	128.2	131.0
125	129.1	132.2
160	130.0	133.4
200	131.1	131.9
250	130.5	130.5
315	130.0	130.0
400	130.0	130.0
500	129.8	129.8
630	128.3	128.3
800	126.9	126.9
1000	123.9	123.9
1250	122.0	122.0
1600	120.4	120.4
2000	120.9	120.9
2500	117.9	117.9
3150	117.2	117.2
4000	115.5	115.5
5000	114.5	114.5
6300	113.7	113.7
8000	113.9	113.9
10000	114.8	114.8
OASPL	140.5	142.7

3.2.6 Shock

Secondary payloads and the associated separation systems shall not induce undue stress on the primary payload. The maximum shock spectrum at the SIP (value at 95% probability with 50% confidence; resonant amplification factor, Q=10) shall not exceed the levels shown in. These levels are shown graphically in Figure 16.

Table 2 EELV Maximum Shock Levels

Shock Spectrum from EELV to PL (G's)		Shock Spectrum from PL to EELV Interface (G's) (due to SV Separation)	
Freq-Hz	4m EELV	Freq-Hz	All Payload Classes
100	40	100	150
125	-	125	175
160	-	160	220
200	-	200	260
250	-	250	320
315	-	315	400
400	-	400	500
500	-	500	725
630	-	630	1100
800	-	800	2000
1600	-	1600	5000
2000	-	2000	5000
5000	3000	5000	5000
10000	3000	10000	5000

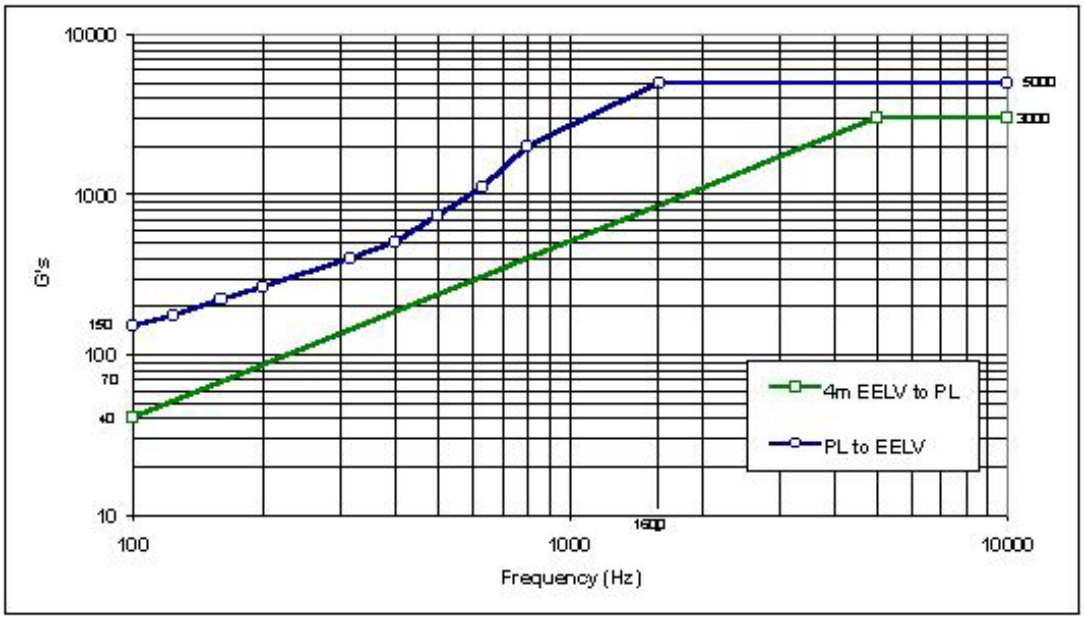

Figure 16 EELV Maximum Shock Levels

3.2.7 SPL Fundamental Frequency

The first fundamental frequency of all secondary payloads shall be greater than 35 Hz, unless otherwise waived by STP.

4 Mission Integration and Documentation

This section describes the mission integration, mission analysis, and documentation requirements for the secondary satellites.

4.1 Mission Integration

Secondary payload mission integration is managed by STP. The mission integration process starts no later than L-36 months so that the ESPA and the secondary payloads are ready to enter the standard EELV integration process at L-24 months. STP will have pre-coordinated the ESPA flight with the primary payload prior to manifesting any secondary payloads.
No later than L-36 months, the secondary payload will submit a payload questionnaire (contained in Appendix A) to STP. STP will evaluate the secondary payload requirements and target a launch opportunity. Once an ESPA mission is developed, STP will contract with the EELV provider to conduct mission specific special studies. The goal of this activity is to ensure that the ESPA and secondary payloads are in a mature state to enter the standard EELV mission timeline at L-24 months.

4.2 Mission Analyses

As part of the ESPA mission, the EELV providers will perform various types of analysis to determine any incompatibilities with the LV or primary payload. Some of the analysis starts at the beginning of the L-24 month timeframe and the rest occur during the 24-month cycle. Most of these analyses that are performed by each EELV provider are given below; note that some of these analyses may not be standard. Also, there may be some analysis that each EELV provider may perform that is not stated below but will be communicated once an ESPA mission has been determined.

4.2.1 Coupled Loads Analysis (CLA)

Each EELV provider will perform a coupled dynamic-loads analysis to define flight loads, accelerations, and deflections of the launch vehicle and spacecraft structures. This analysis is used to help the satellite manufacturer in the design process so that areas of concern can be addressed up-front; thereby reducing major design costs later in the spacecraft design cycle. Typical launch vehicle events that will be simulated during CLA include liftoff, air-loads, engine starts and engine cut-off. However, not all events may be analyzed if flight experience or class analyses show them to be benign events.

Outputs from the CLA include maximum accelerations and interface loads at selected nodes of the spacecraft. Also, as part of this analysis, worst-case spacecraft-to-fairing dynamic clearance is determined. Each spacecraft that will be manifested on ESPA must provide dynamic models in accordance with specific EELV provider required format.

4.2.2 RF Compatibility Analysis

Each EELV provider will perform a RF compatibility analysis to verify that spacecraft RF sources are compatible with the launch vehicle telemetry and tracking beacons. Typical systems that will be analyzed are S-band telemetry systems, C-band tracking systems and flight termination systems. A comprehensive report will be published describing the link requirements and results, which will include both airborne and ground requirements. This report will include any RF interference from each secondary spacecraft.

4.2.3 Thermal Analysis

Both EELV providers perform thermodynamic analysis of the thermal environments imposed on the secondary spacecraft from pre-launch conditions up until the spacecraft is separated from the launch vehicle. Each ESPA secondary satellite is required to provide a payload thermal math model, geometric math model, and spacecraft power dissipation timeline for this analysis. The results from this analysis can be used to design thermal interfaces; it can also impact mission operations by limiting the thermal environment imposed on the secondaries.

Typically, these models should be less than 400 nodes each, and each EELV provider may request these models in various formats. Information to be included in this model includes illustrations of all surfaces, a description of surface properties, and correspondence between the nodes of the thermal model and geometric model. This model should include illustrations of all thermal modeling; detailed component power dissipation's for pre-launch, ascent,

and on-orbit mission phases; steady-state and transient test case boundary conditions, and output minimum allowable component temperature limits; and internal spacecraft convection and radiation modeling.

4.2.4 Separation and PLF Clearance Analysis

A payload fairing (PLF) clearance analysis will be performed for the PLF jettison to verify clearances of secondary satellites with respect to the fairing. A separation analysis is also performed for the primary separation with respect to ESPA and the LV, as well as the ESPA secondaries with respect to the LV. This analysis determines the minimum relative velocity needed before any LV maneuvers are performed; it will also make sure that the LV upper stage will not re-contact any of the secondaries after being separated.

4.2.5 Acoustic Analysis

Once the size, shape and overall dimensions of the spacecraft are defined, a detailed mission specific acoustic analysis can be performed. The analysis of the acoustic environment determines the effects of noise reduction of the PLF, the fill factor of the secondary satellites, and the acoustic environment for the specific ESPA mission.

4.2.6 Payload Fairing Venting Analysis

A venting analysis on the ascent phase may be performed to determine mission-specific pressure profiles. If required, the secondary satellites must provide a spacecraft venting configuration and any specific PLF requirements, such as thermal shields. The output of this analysis will be provided to the secondary satellites and will include PLF pressure profiles and depressurization rates as function of flight time.

4.2.7 Mission Analysis

Mission analysis is typically the first step in the mission planning process, and requirements should be submitted as soon as the secondaries have been manifested on ESPA. Initially, this analysis will use the best available mission requirements (such as spacecraft weight, orbit requirements, etc.), and is primarily intended to uncover any unforeseen problems. The analysis will provide information on launch vehicle environment, performance capability (propellant margin and reserve), sequencing, orbit dispersion, and trajectory. The trajectory design ensures that all spacecraft, launch vehicle, and range-imposed environmental and operational constraints are met during flight. The trajectory is also used to develop mission-targeting constraints (orbit parameters) and represents the flight trajectory (injection accuracy).

4.2.8 Range Safety Analysis

To ensure compliance with Eastern/Western range regulations, the EELV provider will analyze the flight plan for a particular ESPA mission. Typically, this submittal will occur one year before the launch for the initial flight plan, and then approximately 45 days prior to launch for the second. This information includes nominal and non-nominal trajectories and impact locations of jettisoned hardware. Each EELV contractor will prepare a range support or operations plan that will include launch operations configurations, organizational roles and responsibilities, mission rules, mission control team, and go/no-go criteria.

4.2.9 EMI/EMC Analysis

An EMI/EMC analysis is performed to ensure compatibility between all avionics equipment, primary payload and the secondaries. It will cover requirements for bonding, lightning protection, wire routing and shielding, and procedures. This analysis will also include intentional and unintentional RF sources to conform to the 6-dB margins with respect to all general EMI/EMC requirements. Also, this analysis will include an electro-explosive device (EED) RF susceptibility analysis performed to range requirements.

4.2.10 Post-flight Data Analysis

Each EELV provider will perform post-flight data analysis on each particular ESPA mission; this analysis will verify the LV's performance from available flight data. In addition to the LV performance evaluation, the post-flight data includes an assessment of the injection conditions (in terms of orbital parameters and deviations from the target values) and spacecraft separation attitude and rates. Also, this report will document the payload environments, including primary and secondary satellites, to the extent in which the LV was instrumented. This data may include shock, acoustic, vibration or interface loads depending on sensor use.

4.3 Documentation

All secondary payloads that will be manifested on ESPA will have to submit documentation to the LV provider/mission integrator in a timely fashion. These documents will represent the primary communication for

issues, such as secondary mission requirements, safety data, etc., to the various support agencies working on the particular mission. Each secondary satellite will provide a single individual to act as the interface with the ESPA mission integrator. All data, whether formal or informal, shall be routed through this single-point interface.

4.3.1 Overall Documentation Requirements

Typical documentation that will be required for secondary satellites is listed in Table 3. The mission manager shall provide the specific document requirements once ESPA has been manifested on a particular mission.

Table 3 Typical Documentation Requirements for Secondary Satellites

	Item
1	**Spacecraft Questionnaire** The spacecraft questionnaire is the first step in the ESPA manifest process. It should include the initial secondary spacecraft requirements, orbit requirements, interface details, etc. The list is specified in Appendix A and contains a set of questions whose answers will preliminarily define the interfaces and requirements at time of preparation.
2	**Spacecraft Dynamic Models** Spacecraft mathematical model is required for each secondary satellite to be used in coupled-loads analysis; see Section 4.2.1 for more information on CLAs.
3	**Interface Requirements Document** Each secondary satellite is required to submit an Interface Requirement Document (IRD) or similar document for input into the Interface Control Document (ICD). The IRD is used to define technical and functional requirements imposed by the spacecraft to the launch vehicle. Information typically includes: 1) Mission Requirements—Including orbit parameters, launch window parameters, separation functions, and any special trajectory requirements, such as thermal maneuvers and separation over a telemetry and tracking ground station; 2) Spacecraft Characteristics—Including physical envelope, mass properties, dynamic characteristics, contamination requirements, acoustic and shock requirements, thermal requirements, and any special safety issues; 3) Mechanical and Electrical Interfaces—Including spacecraft mounting constraints, spacecraft access requirements, umbilical power, command and telemetry, electrical bonding, and electromagnetic compatibility (EMC) requirements; 4) Mechanical and Electrical Requirements for Ground Equipment and Facilities—Including spacecraft handling equipment, checkout and support services, prelaunch and launch environmental requirements, spacecraft gases and propellants, spacecraft radio frequency (RF) power, and monitor and control requirements; 5) Test Operations—Including spacecraft integrated testing, countdown operations, and checkout and launch support.
4	**Fairing Requirements** Any special fairing requirements should be specified in the questionnaire and updated through the mission process; this includes any access to the spacecraft after fairing encapsulation, internal fairing temperatures, surface sensitivities, etc. Final spacecraft requirements are needed to support the mission-specific fairing modifications during production.
5	**Spacecraft Test Documents** Each secondary spacecraft is required to document the test plan (e.g., static loads, vibration, acoustics, shock) for the spacecraft. This plan should include the approach used to perform qualification and acceptance testing for the satellite. This plan should be a general test philosophy and an overview of system-level testing to demonstrate adequacy of the spacecraft for flight. This will include test objectives, test configurations, test methods, and schedule. Test Reports will also be required once these tests have been performed. The report should summarize the all performed tests to verify the adequacy of the satellite structure for flight loads. For the satellite structural systems that were not verified by tests, a structural-loads analysis report shall be provided documenting the analyses performed and the resulting margins of safety.
6	**Spacecraft Drawings** All secondary satellites are required to submit drawings showing the configuration, shape, and dimensions of their satellite; preferably first draft sent with spacecraft questionnaire. These drawings should specify a coordinate system relative to ESPA and list any special clearance requirements. The drawings should be sent via CAD media.

7	**Launch Window** Each secondary satellite is required to specify the window opening (to nearest minute) and closing (to nearest minute) times for any given day. The final window data should extend for at least two weeks beyond the scheduled launch date. Launch windows should be constrained to a few hours. Note that the launch window will be constrained from the primary payload's mission and the secondaries have to fit within this launch window.
8	**Missile System Pre-launch Safety Package (MSPSP)** Before any secondary satellite can use the launch facilities and resources (including launch), an MSPSP must be prepared and submitted. The MSPSP is a data package that provides detailed technical data on all hazardous items including drawings, schematics, and assembly and handling procedures. The major categories of hazardous systems are ordnance devices, radioactive material, propellants, pressurized systems, toxic materials and cryogenics, and RF radiation. More specifics on the MSPSP can be found in Section 0 or the EWR 127-1.
9	**Radio Frequency Radiation** Each secondary spacecraft is required to specify the RF transmitted by the spacecraft during ground processing and launch. Inputs include the RF characterizations (power levels, frequencies, duration, frequency bandwidth etc.), locations and checkout requirements (open-loop, closed-loop, pre-launch, ascent phase, etc.)
10	**Mission Requirements** Each secondary spacecraft will submit mission requirements (spacecraft mass, orbit requirements, tracking requirements) in a timely fashion throughout the mission integration process.. The first attempt at mission requirements will be accomplished via the spacecraft questionnaire. Subsequent submittals will occur throughout the mission integration process and will be solidified at ESPA manifest on an EELV mission.
11	**Range or Network Support** If there are special or unique range and network support requirements for a secondary spacecraft, then the spacecraft agency must submit operational configuration, communication, tracking, and data flow requirements. This information is needed to support the EELV provider's preparation of the document arranging range and network support.
12	**Spacecraft Launch Operations Plan** Each secondary satellite is required to provide STP a detailed understanding of the launch site activities and operations. This should include 1) Detailed sequence & time span of all spacecraft-related launch site activities including: ground equipment, installation, facility installation & activities, spacecraft testing & spacecraft servicing 2) Recycle requirements 3) Restrictions to include launch site activity limitations, constraints on launch vehicle operations, security requirements & personnel access limitations & safety precautions 4) Special requirements include handling of radioactive materials, security & access control 5) Support requirements to include personnel, communications & data reduction 6) Launch & flight requirements for real-time data readout, postflight data analysis, data distribution, post-flight facilities
13	**Spacecraft Integration Procedures** Each secondary spacecraft must specify any handling constraints, environmental constraints, personnel requirements, equipment requirements, etc. for their satellite. This information should include all operations procedures that are accomplished at the launch site. The EELV provider for launch site preparations will use the data, and any hazardous procedures should follow from Section 5.2.2.
14	**Spacecraft Mass Properties** Each secondary spacecraft is required to report their respective spacecraft mass properties. This includes all the masses that will separate or be retained, the center-of-gravity (cg) location for the same masses, changes in cg due to any appendage deployment, moments of inertia, products of inertia, and propellant slosh models. The values shall include the nominal values and 3σ uncertainties.
15	**Information Memorandum** Each secondary spacecraft shall submit information to STP on specific orbital parameters to the EELV provider. Data required are spacecraft on-orbit descriptions, description of pieces and debris separated from the spacecraft, the orbital parameters for each piece of debris, payload spin rates, and orbital parameter information for each different orbit through final orbit.

5 Safety

This section describes the safety requirements that all secondary satellites must comply with in order to be launched at Cape Canaveral Air Force Station (CCAFS) or Vandenberg Air Force Base (VAFB). More detailed information will be provided once a candidate mission is chosen for the secondary satellites.

5.1 Safety Requirements

All pre-launch operations of the secondary satellites must meet safety requirements. The United States Air Force (USAF) is responsible for overall safety at CCAFS and VAFB and has well established safety requirements. If the secondary satellites use any Astrotech facilities at CCAFS or VAFB, they must comply with the Astrotech safety policies. The same holds true for any operations that will be conducted at Spaceport Systems International (SSI) facilities. The documents that will be needed to use these facilities are given below:

1. Astrotech Space Operations Safety Standard Operating Procedure (SOP), 1988 - CCAFS
2. Astrotech Space Operations Safety Standard Operating Procedure (SOP), 22 Sept 1994 - VAFB
3. Spaceport Systems International, Integrated Processing Facility Safety Plan, IPF 96-SA01, Rev A, 21 November 1996.

Each EELV contractor/the mission integrator will help facilitate the working of these documents with the appropriate range. The Space Wing safety organizations encourage the secondary satellite organizations to coordinate with them to generate a tailored version of the EWR-127-1 document for their prospective program.

5.2 Documentation Requirements

All satellites are required to submit safety documentation containing detailed information on all hazardous systems and any associated operations. Satellites that will launch from Cape Canaveral Air Force Station (CCAFS) or Vandenberg Air Force Base must comply with Eastern/Western Range Regulation (EWR) 127-1. The documentation of these hazards is briefly described below.

5.2.1 Missile System Pre-launch Safety Package (MSPSP)

The MSPSP is a data package that provides detailed technical data on all hazardous items. This includes all design, test, and operational considerations. Therefore, any specific ground support equipment (GSE) that will be used by any secondary satellites must be documented in this package. The content of the MSPSP can be found in EWR 127-1. The MSPSP must be approved by Range Safety before any secondary satellite element reaches the launch site.

5.2.2 Secondary Spacecraft Launch Site Procedures

Space Wing safety must approve all processing procedures that includes hazardous operations. These procedures must be documented and approved by the appropriate safety officer. For procedures that involve LV personnel, the respective LV provider must also approve these procedures. It should also be noted that the LV provider may have more stringent requirements than range safety.

5.2.3 Radiation Data

All emitters of ionizing and non-ionizing radiation must submit documentation to the Air Force safety agency. Those systems producing non-ionizing radiation will be designed and operated so those hazards to personnel are the lowest practical level. The required documentation will depend on location, use, and type of emitter.

5.2.4 Radio Frequency (RF) Data

Before any secondary satellite is allowed to radiate radio-frequency (RF) emissions on the pad, permission must be secured from the Range Protection Officer (RPO). The required data include descriptions of the equipment, procedures, and data forms on the personnel who will be using the procedures. Also, an RF ordnance hazard analysis must be performed, documented, and submitted to confirm that the payload systems and the local RF environment present no hazards to ordnance on the spacecraft or launch vehicle.

5.2.5 Other Data

Each EELV provider can have slightly different safety requirements and LV provider specific data requirements will be obtained once a secondary satellite is manifested. Some of these data requirements are specified in the prospective LV provider's planner's guides.

6 Launch Facilities and Operations

Details on this section will be further developed at time of secondary payload manifest. This information may be documented in the ESPA ICD or another mission specific document. Secondary payload managers should be cognizant that they must deliver their satellites to the range at a determined timeframe and to a specific building. Typical buildings that may be used during integration can be found in the Delta IV and Atlas V Planner's Guides.

Appendix A – Spacecraft Questionnaire

To facilitate a quicker manifest on ESPA, the secondary satellite should submit the spacecraft questionnaire as soon as possible. This questionnaire will be needed to assess which secondary satellites have similar mission requirements and would be compatible on the same ESPA mission. Typically, the questionnaire is required at least 3 years before a target launch opportunity, since all secondary satellites must be manifested on ESPA before ESPA can be manifested on one of the EELV missions. Not all questions will be feasible to answer early in the process but the secondary satellites should provide as much information as possible to STP.

ESPA Secondary Payload Questionnaire
Mission Name:_____
Mission Sponsor:_____

Mission Integration
1. Initial Launch Capability
2. Program Schedule/Major Milestone Dates
3. Frequency Approval Status

Orbit Definition
1. Inclination
2. Perigee
3. Apogee
4. Launch Window Constraints (Sun Angle, Eclipse, Ascending Node)

Physical Characteristics
1. Dimensions/Dimensioned Drawing
2. Mass and c.g. location (margined values)
3. Moments and Products of Inertia
4. Coordinate System
5. Fundamental Frequencies (Axial and Lateral)
6. Separation System Characteristics
7. Fairing Access Requirements

Electrical Characteristics
1. Required number and type of electrical signals from LV.
2. Required number and type of ground umbilical wires.
3. Interface connector part number.
4. Transmitter frequency and power.

Environmental Requirements
1. Cleanliness Requirements
2. Temperature Requirements
3. Humidity Requirements

Processing Facility Requirements
1. Does the SPL need access to SV system test facility?
2. When does the SV plan on arriving at the launch site?
3. What are the SV and GSE space requirements at the launch site?
4. What are the security requirements at the launch site?

Safety Concerns
1. What ordnance devices are on the SV?
2. What type of pressure vessels are on the SV? At what pressure?
3. Does the SV contain any hazardous materials? If so, list type and quantity.
4. Does the SV contain any radioactive devices?