**QUESTION 1 (4 pts).** Classify the configuration (i.e., the geometry) of the Grob GF-200 four-seat business aircraft, shown at right.

**(10 pts).** Circle whether the statement is true or false.

T F The troposphere is a gradient layer.

T F The lower stratosphere is a gradient layer.

T F Body forces are not negligible for a complex mixture such as diatomic nitrogen and oxygen.

T F The definition of dynamic pressure is valid for compressible flow regimes.

T F True airspeed is equal to indicated airspeed for low speeds at standard sea level conditions.

T F The geopotential altitude is a totally fictitious altitude.

T F The equation of state is given by $dp = -\rho g dh_G$.

T F Archimedes Principle states that the buoyant force is equal to weight of the enclosed fluid.

T F The units of $R$ are $\dfrac{m^2}{sec^2 K}$.

**(6 pts).** The low-speed wind tunnel at right is connected to a manometer tube system to measure pressures through the tunnel. Fill in the pressures (or pressure differences) that are represented by the following:

$|h_1 - h_2| =$ _____

$|h_2 - h_3| =$ _____

$|h_1 - h_3| =$ _____

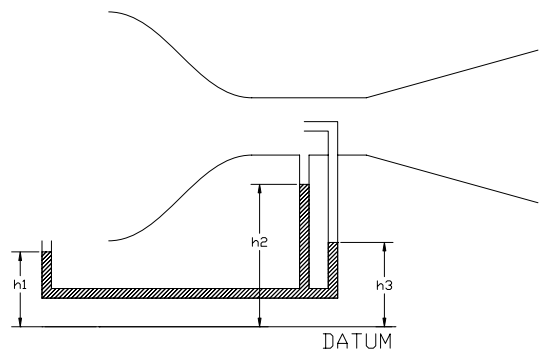


**QUESTION 2 (25 pts).** A new Eiffel-type low-speed wind tunnel is being designed for the lab deck. The test section is to have a 60″x42″ cross-section and the contraction ratio is 10. The air will be driven with an 8′-diameter fan that is rated at 300,000 cfm (ft³/min). Assume standard sea level conditions.

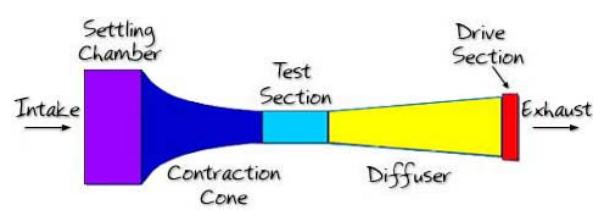


a. What is the maximum test section velocity?
b. Determine the static, dynamic, and total pressures at this velocity.

**QUESTION 3 (15 pts).** The momentum equation can be expressed as:

$$dp + \rho u du + \rho g dh = 0\,,$$

a. What is this equation called and what are the assumptions?
b. Derive Bernoulli's equation. Clearly state and implement all assumptions.

**QUESTION 4 (20 pts).** SpaceShipOne achieved a maximum altitude of about 100 km on 21 June 2004. During rocket-boosted ascent, the temperature was measured at 16.5°C and the pressure at 1.086 mb at an altitude of 48 km. Determine the temperature and pressure at 52 km during this flight.

**QUESTION 5 (20 pts).** During its descent back to earth, SpaceShipOne leveled off into a glide around mid-stratosphere. Assume that it further decelerated to 200 ktas at an altitude of 15,000 ft.

a. What is the dynamic pressure at this flight condition?
b. What is the total (or stagnation) temperature on the flight vehicle?

## QUESTION 1 (10 pts). Fill-in.

The _____ equation is given as $dp = -\rho U dU$ . State the three assumptions used to derive this equation:

a)
b)
c)

The _____ equation is given as $p_T = p_S + \frac{1}{2}\rho U^2 + \rho g h$. State the <u>additional</u> assumption used to derive this equation:

d)

Define each pressure in the equation:

$p_T$ : _____.
$p_S$ : _____.
$\frac{1}{2}\rho U^2$ : _____.
$\rho g h$ : _____.

## QUESTION 2 (20 pts). Short Answer.

Standard sea level density is _____ (give value and units).
Standard sea level temperature is _____ (give value and units).
Standard sea level pressure is _____ (give value and units).

Archimedes Principle states that the buoyant force on a system is equal to _____
_____
_____.
An incompressible flow regime assumes _____.
The equation of state is given by _____.
What are the units of the specific gas constant?

**QUESTION 3 (25 pts).** A Mars airplane like the ARES needs to be designed to operate at an altitude of 3 km in the Martian atmosphere. The limits of this layer of the atmosphere are defined by the data given. **NOTE**: For Mars, $g_0$=3.702 m/sec² and R=189.0 J/kg-K (the atmosphere is mostly $CO_2$).

| h (km) | T (°C) | p (mb) |
|---|---|---|
| 0 | 5.0 | 8.000 |
| 7 | -1.9 | 4.855 |

a. Identify the type of atmospheric layer represented by this data.
b. Calculate the temperature at 3 km. Express your answer in °C.
c. Calculate the pressure at 3 km. Express your answer in mbar.

**QUESTION 4 (20 pts).** As a result of hurricane ISABEL, the sea water intrusion into the Rickover Lab Deck was estimated to have a volume flow rate of 200,400 ft³/hour at its peak. Assume you are tasked with keeping that water out of the labs by using several pumps and fire hoses (data shown at right).

| Fire hose data |
|---|
| Diameter = 8 in.<br>$V_{MAX}$ = 10 ft/sec |

a. Calculate the total massflow rate of the incoming sea water. Assume a density of 1.94 slug/ft³.
b. How many fire hoses, operating at full flow capacity, are required to save the Lab Deck?

**QUESTION 5 (25 pts).** A pitot tube is mounted on the wing of a Diamond Star (a low-wing, propeller-driven trainer). The aircraft is conducting a training mission at a speed of 135 knots and an altitude of 5,000 ft.

a. Determine the static and dynamic pressures. Express your answer in psi.
b. Determine the total pressure measured by the pitot tube.
c. Calculate the indicated airspeed as displayed on the flight instruments. Express your answer in KIAS.

**QUESTION 2 (15 pts).** Starting with the free-body diagram at the right, derive the hydrostatic equation. Assume that the y-axis is increasing in the vertical direction.

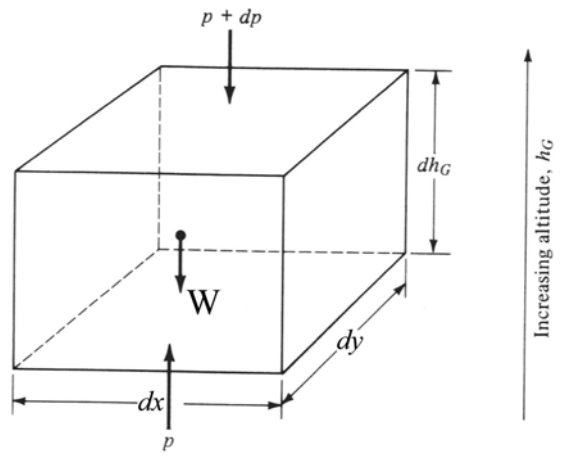


**QUESTION 3 (6 pts).** Define the following terms as completely as possible.

State properties: _____

Isothermal layer: _____

Gradient layer: _____

Incompressible flow: _____

$\frac{1}{2}\rho V^2$: _____

KIAS/KTAS: _____

**QUESTION 4 (4 pts).** Fill in any **4** of the **6** possible values for the following table. Pick and label convenient units of your choosing.

| | English Units | Metric Units |
|---|---|---|
| Sea level Standard PRESSURE | | |
| Sea level Standard TEMPERATURE | | |
| Sea level Standard DENSITY | | |

**QUESTION 5 (20 pts).** A sounding rocket burns out in the stratosphere and coasts up to its apogee, also in the stratosphere. Pressure and temperature sensors send telemetry data at both points.

$p_{burnout}$ = 1.0959 psi
$T_{burnout}$ = -55.5 °F

$p_{apogee}$ = 0.8216 psi
$T_{apogee}$ = -55.5 °F

a. How far does the rocket coast (i.e. the change in altitude)?
b. If tracking stations measure the apogee to be at 65,000 feet, at what altitude was burnout?
c. Calculate the density altitudes at burnout and apogee.

**QUESTION 6 (30 pts).** The following data is given for a Piaggio P180. (NOTE: 1 nautical mile = 6,076 ft)

GTOW = 11,550 lbs
$S_{wing}$ = 172.2 ft²
$S_{canard}$ = 24.22 ft²
$S_{horiz.tail}$ = 41.23 ft²
$V_{cruise}$ = 185 knots
$h_{cruise}$ = 41,000 ft

a. Calculate the dynamic pressure in lb/ft² at the flight conditions.
b. Calculate the total pressure in lb/ft² at the flight conditions.
c. What would the indicated airspeed be at the conditions? Present your answer in KIAS.

**QUESTION 7 (20 pts).** The USNA Closed-Circuit Wind Tunnel (CCWT) has a contraction ratio of 6.5 (i.e. the ratio of the large inlet area to the smaller test section area). Assume the test section air is at the following conditions: $\rho$=0.00229 slug/ft³ and p=14.67 psi.

If the test section has a 54x38-inch cross section and the velocity there is 150 mph, calculate the following:

a. The inlet area (in ft²).
b. The velocity through the inlet (in ft/sec).
c. The density, pressure, and temperature in the <u>inlet</u> section.

**QUESTION 1 (20 pts).** Fill in the blanks.

The _____ is the lowest gradient region of the earth's atmosphere. The _____ is the lowest constant-temperature region.

The *equation of state* is written as _____, and it applies only to specific types of fluids which are assumed to be _____.

*Bernoulli's equation* is derived from (the) _____ equation when we assume that the fluid _____ doesn't change significantly throughout the flow field.

**QUESTION 2 (5 pts).** Match the flow regime with a description.

_____ A .226-caliber bullet

_____ Flow over a 747 wing at cruise

_____ The Severn River

_____ Flow over the Space Shuttle during re-entry

_____ Flow over an Indy Car rear wing

| | |
|---|---|
| A | Incompressible |
| B | Subsonic Compressible |
| C | Transonic |
| D | Supersonic |
| E | Hypersonic |

**QUESTION 4 (10 pts).** Fill-in the unlabeled parts of the X-34 launch vehicle.

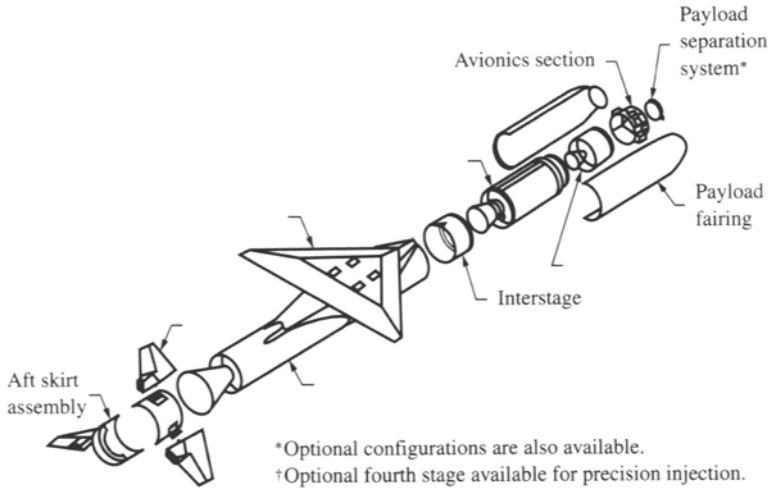

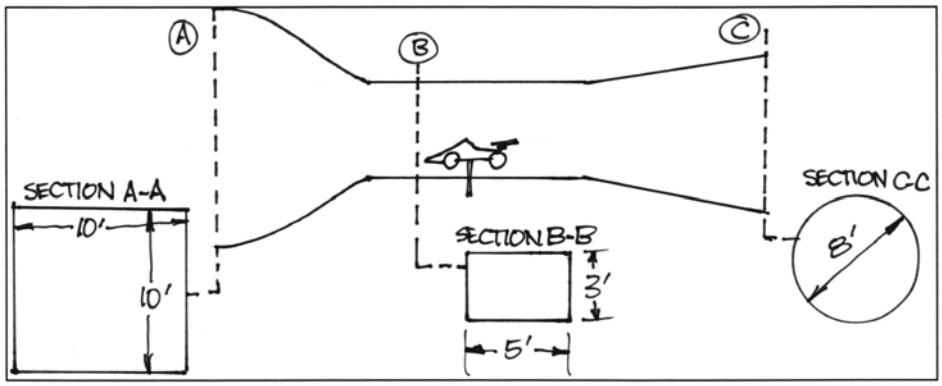


**QUESTION 7 (25 pts).** The wind tunnel above is used to test race cars in Indianapolis. The inlet and exit are open to the atmosphere (conditions in Indianapolis: $\rho$=0.00229 slug/ft$^3$, p=14.22 psi). The test section pressure is 14.00 psi and the test section temperature is 513 °R.

a. What is $p_t$ in the test section?
b. Calculate the Mach number in the test section.
c. Calculate the velocity in the test section <u>and</u> at the inlet face.