EE301 - Lesson 4
Reading: Sections 5.1-5.6

SERIES CIRCUITS AND KVL

Learning Objectives

a. Identify elements that are connected in series.
b. State and apply KVL in analysis of a series circuit.
c. Determine the net effect of series-aiding and series-opposing voltage sources.
d. Compute the power dissipated by each element and the total power in a series circuit.
e. Describe the basic function of a fuse or a switch.
f. Draw a schematic of a typical electrical circuit, and explain the purpose of each component and indicate the polarity and current direction.

Series Circuits

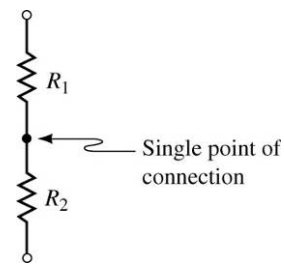

Two elements are in series if:

- They are connected at a single point (termed a node)
- No other current-carrying connections exist at this node

So, in the picture on the right, R_1 and R_2 are in series.

Current is similar to water flowing through a pipe. Current leaving the element (e.g., a resistor) must be the same as the current entering the element.

If two elements are in series, the same current passes through them. This is <u>not</u> the same as saying: "The same value of current passes through them." There might be two resistors in a circuit that are *not in series* that nevertheless both have the same current value (say, 1.5 A) passing through them.

A series circuit is constructed by connecting elements in series. *The same current passes through every element of a series circuit.*

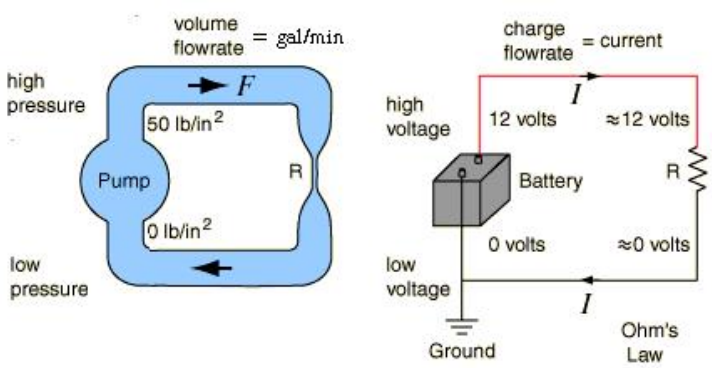

<u>Example:</u> In each circuit below, list the resistors in series with resistor R_2.

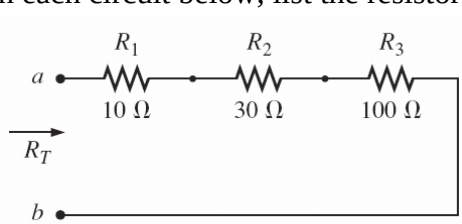

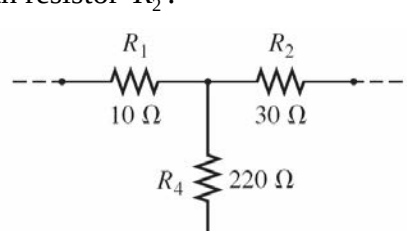

<u>Solution</u>:

EE301 - Lesson 4
Reading: Sections 5.1-5.6

<u>Kirchhoff's Voltage Law (KVL)</u> Kirchhoff's voltage law (KVL) states that the algebraic sum of all voltages around a closed loop is zero.

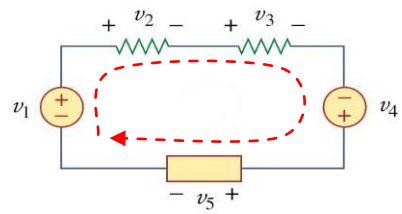

Mathematically, KVL implies $\boxed{\sum_{m=1}^{M} v_m = 0}$

A closed loop is any path that:

- Originates at a point
- Travels around a circuit
- Returns to the original point without retracing any segments

The algebraic sum of the voltage that rises and drops around a closed loop is equal to zero.

$$\boxed{E_1 - v_1 - v_2 + E_2 - v_3 = 0}$$

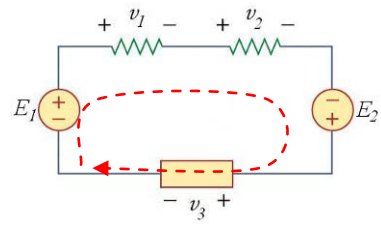

Another way of expressing KVL: Summation of voltage rises is equal to the summation of voltage drops around a closed loop.

$$\boxed{E_1 + E_2 = v_1 + v_2 + v_3}$$

<u>Example.</u> Determine the voltage V_1 in the circuit below.

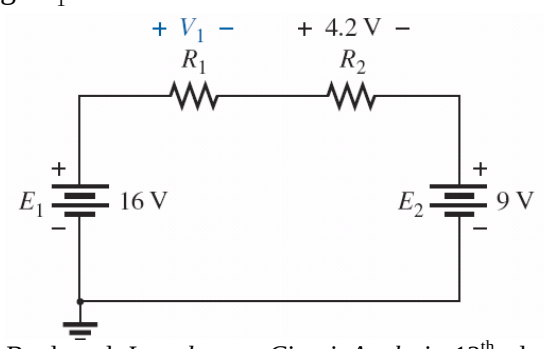

Figure taken from Boylestad, *Introductory Circuit Analysis*, 12th ed., Prentice Hall, 2010

<u>Solution</u>:

<u>Example.</u> Determine the voltage V_x in the circuit below.

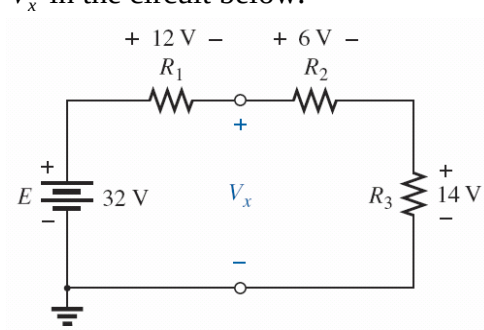

<u>Solution</u>:

EE301 - Lesson 4
Reading: Sections 5.1-5.6

Example. Determine the voltage V_2 in the circuit below

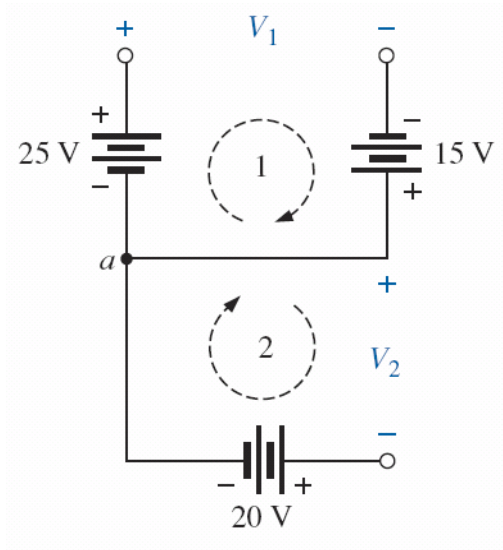

Figure taken from Boylestad, *Introductory Circuit Analysis*, 12th ed., Prentice Hall, 2010

Solution:

Resistors in Series Most complicated circuits can be simplified. For example, two resistors in series can be replaced by an equivalent resistance R_T.

$$R_{eq} = R_1 + R_2$$

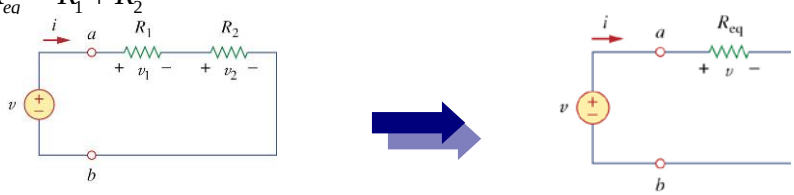

The equivalent resistance R_{eq} of any number of resistors in series is the sum of the individual resistances.

$$\boxed{R_{eq} = R_1 + R_2 + \cdots + R_N = \sum_{n=1}^{N} R_n}$$

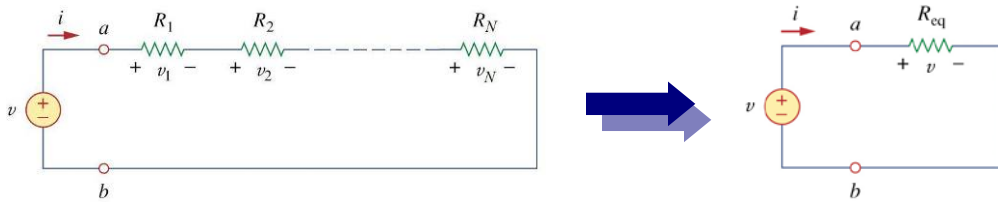

EE301 - Lesson 4

Reading: Sections 5.1-5.6

It is worth pausing to remind you that THE POLARITY OF THE VOLTAGE ACROSS A REISITOR IS DETERMINED BY THE DIRECTION OF CURRENT FLOW!!!

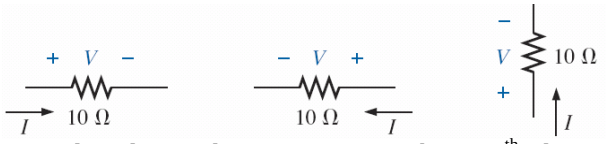

Figure taken from Boylestad, *Introductory Circuit Analysis*, 12th ed., Prentice Hall, 2010

Example: Determine R_{TOT} in the circuit below.

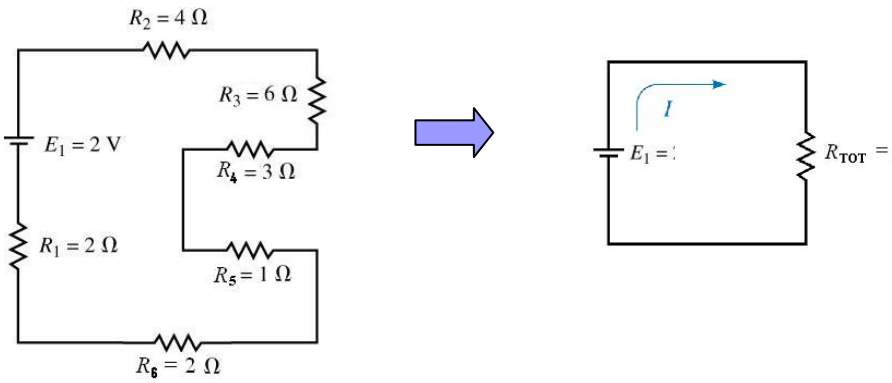

Solution:

Example: (a) Determine the ohmmeter reading in the circuit below.
(b) Determine the ohmmeter reading in the circuit below if the leads were reversed.

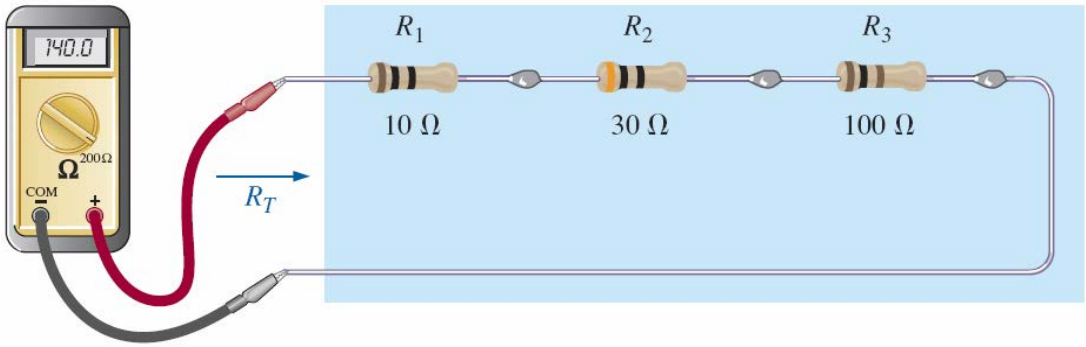

Figure taken from Boylestad, *Introductory Circuit Analysis*, 12th ed., Prentice Hall, 2010

Solution:

EE301 - Lesson 4
Reading: Sections 5.1-5.6

Power in a Series Circuit The power dissipated by each resistor is determined by the power formulas:

$$P = VI = V^2/R = I^2R$$

Since energy must be conserved, power delivered by voltage source is equal to total power dissipated by the resistors:

$$P_T = P_1 + P_2 + P_3 + \cdots + P_n$$

Multiple Voltage Sources in Series Sources can be replaced by a single source having a value that is the sum or difference of the individual sources. *The source polarities must be taken into account*. The resultant source will be the sum of the rises in one direction minus the sum of the voltages in the opposite direction. For example, the collection of four sources shown below on the left can be combined into the single 3V source shown on the right. Again, note the polarity.

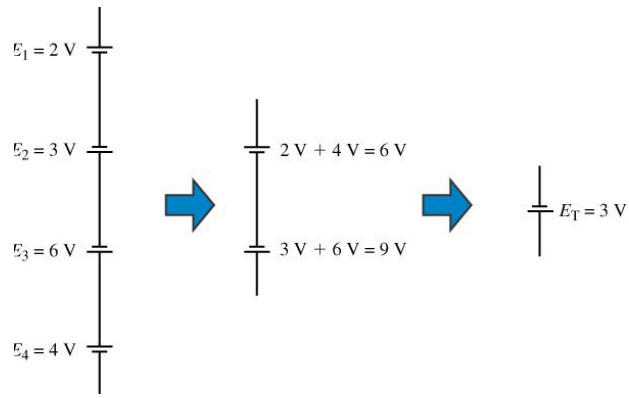

Interchanging Series Components

The order of series components may be changed without affecting the operation of circuit. Sources may be interchanged, but their polarities cannot be reversed. After circuits have been redrawn, it may become easier to visualize circuit operation. The circuit shown below on the left can be simplified, resulting in the circuit shown on the right (where you should convince yourself that the total resistance R_{TOT} is 10 Ω and the total voltage is 5 V with the polarity shown.

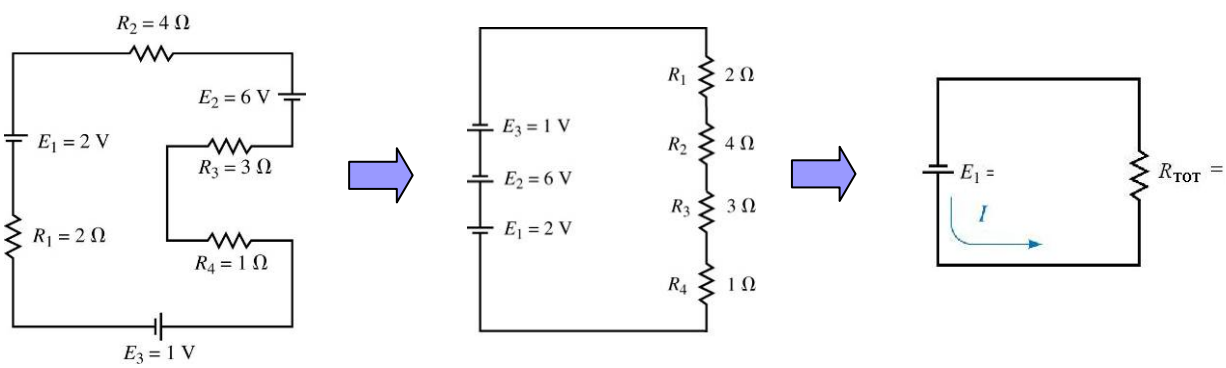

EE301 - Lesson 4
Reading: Sections 5.1-5.6

<u>Switches</u> A basic circuit component you will see as the course progresses is a **switch**. The switch shown below is known as a single-pole, single-throw (SPST) switch.

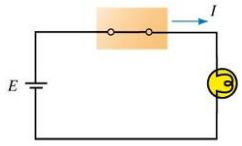

(b) Closed

<u>Fuses</u> A **fuse** is a device that prevents excessive current to protect against overloads or possible fires. A fuse literally "blows" and cannot be reset

<u>Circuit Breakers</u> A **circuit breaker** also prevents excessive current in circuits; however it uses an electro-mechanical mechanism that opens a switch. A "popped" circuit break can be reset.

Symbol for a circuit breaker

Symbol for an ammeter

Symbol for a lamp

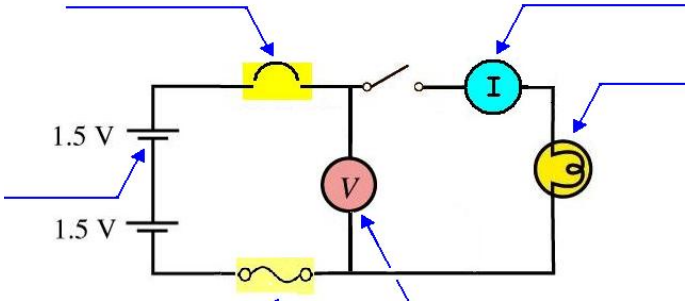

Symbol for a battery

Symbol for a fuse

Symbol for a voltmeter

<u>Example:</u> Determine the unknown voltages V_1 and V_3 in the circuit below.

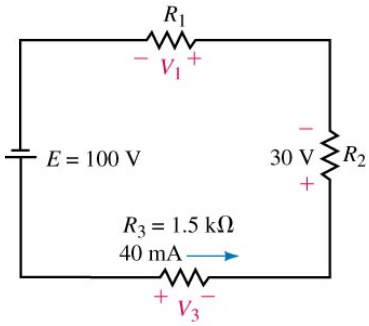

<u>Solution</u>:

EE301 - Lesson 4

Reading: Sections 5.1-5.6

Example: Determine the unknown voltage E_S shown in the circuit below.

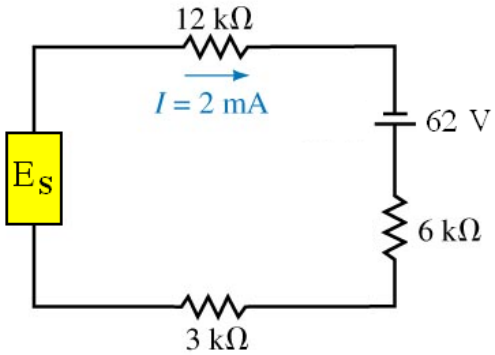

Solution:

Example: Given the circuit:

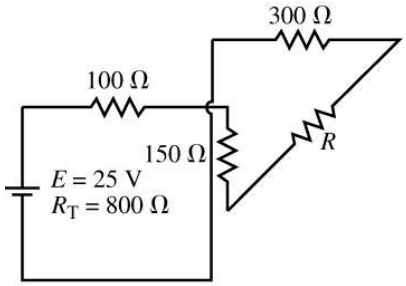

Determine:

a. The direction and magnitude of current
b. The voltage drop across each resistor
c. The value of the unknown resistance

Solution:

Example: Given the circuit:

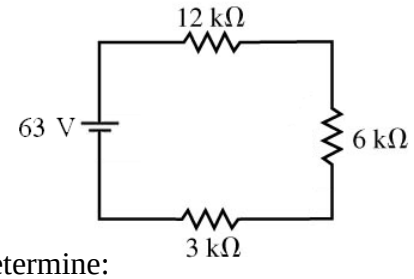

Determine:

a. The power dissipated by each resistor and total power dissipated by the circuit.
b. Verify that the summation of the powers dissipated by the resistors equals the total power delivered by the voltage source.

Solution:

EE301 - Lesson 4
Reading: Sections 5.1-5.6

Example: Given the circuit:

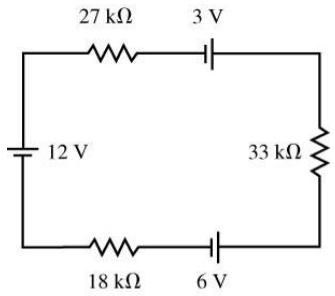

(a) Redraw the circuit with a single voltage source and single resistor.
(b) Determine the current.

Solution:

Example. Your roommate ("The Nerd") has hooked up the circuit shown below.

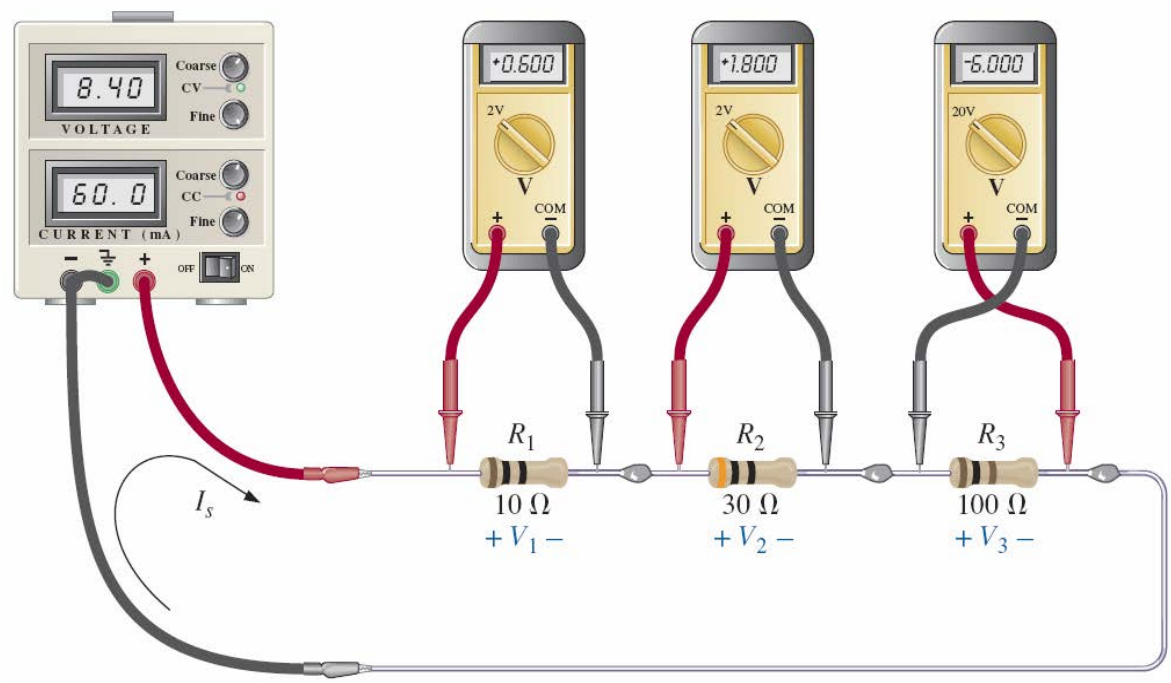

Figure taken from Boylestad, *Introductory Circuit Analysis*, 12th ed., Prentice Hall, 2010

(a) Is the voltage reading across R_2 correct?
(b) Is the voltage reading across R_3 correct?

Solution: