EE301 - Lesson 5
Reading: Sections 5.7-5.9

SERIES CIRCUITS AND VDR

Objectives

a. Explain and compute how voltage divides between elements in a series circuit.
b. Compute voltage drops across resistors using the voltage divider formula.
c. Compute the power dissipated by each element and the total power in a series circuit.
d. Apply concept of voltage potential between two points to the use of subscripts and the location of the reference voltage.
e. Analyze a series resistive circuit with the ground placed at various points.

The Voltage Divider Rule For the voltage applied to a series circuit:

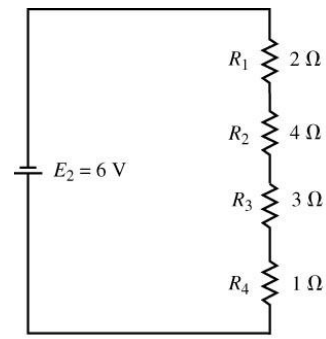

The voltage drop across each resistor may be determined by the proportion of its resistance to the total resistance:

$$\boxed{V_x = \frac{R_x}{R_{Total}} E}$$

If a single resistor is very large compared to the other series resistors (say, 100 times larger), the voltage across that resistor will be the source voltage. Put another way, the voltage across the small resistors will be essentially zero.

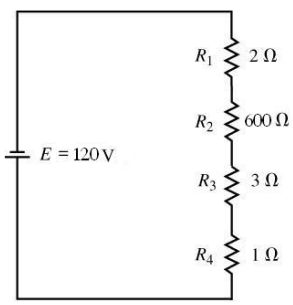

$$V_2 = \left(\frac{R_2}{R_1 + R_2 + R_3 + R_4}\right) E$$
$$= \left(\frac{600\Omega}{2\Omega + 600\Omega + 3\Omega + 1\Omega}\right)(120V)$$
$$= 119V$$

Example. Determine the voltage from *a* to *b* in the circuit shown below.

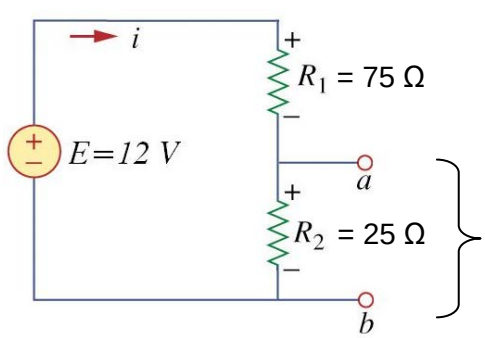

Solution:

EE301 - Lesson 5
Reading: Sections 5.7-5.9

<u>Circuit Ground</u> A circuit ground is a point of reference, or a common point in a circuit for making measurements. A circuit ground is usually physically connected to the earth by a metal pipe or rod. The idea is that if a fault occurs within a circuit, the current is redirected to the earth.

So, ground represents a point of zero reference potential. Ground is 0 volts.

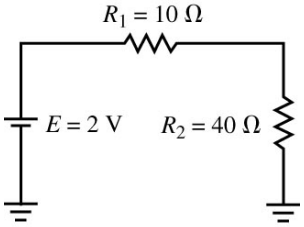

<u>Single subscript notation for voltage</u>: In a circuit with a ground reference point voltages may be expressed with respect to that reference point (e.g. V_c is the voltage at node *c* with respect to the 0 volts found at the ground).

Your friend says that no current flows in the circuit shown on the right, since there is no loop for current to flow. Is your friend correct?

<u>Double subscript notation for voltage</u>: Voltage between any two node points (*a* and *b)* can be written as V_{ab}.

$$\boxed{V_{ab} = \left(V_a - V_b\right)}$$

If *b* is at a higher potential than *c*, then V_{bc} is positive. If *a* is at a lower potential than *b*, then V_{ab} is negative.

<u>Example</u>. Determine V_{ab} and V_{bc} in the circuit shown.

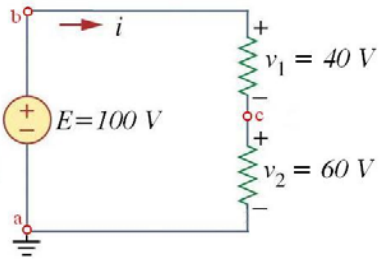

<u>Solution</u>:

Voltages between two points can be determined two ways:

Using known node voltages

$$V_{bd} = V_b - V_d = 100 - 30 = 70 \text{ V}$$

Summing voltage drops or gains across components

$$\text{Vbd} = v_2 + v_1 = 60 + 10 = 70 \text{ V}$$

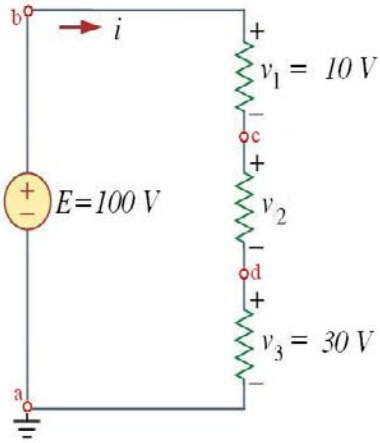

EE301 - Lesson 5
Reading: Sections 5.7-5.9

<u>Point Sources</u> If the voltage at two nodes is known, then you can simplify a circuit for easier analysis by creating a circuit with a point source as shown in the figure bleow:

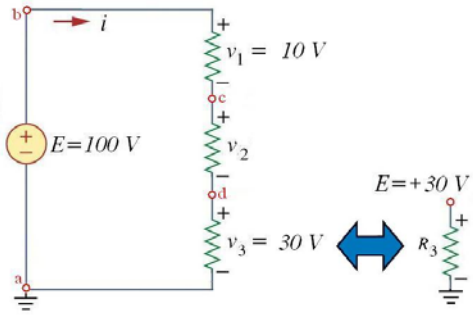

<u>Example</u>. Determine the voltage V_{ab} in the circuit below.

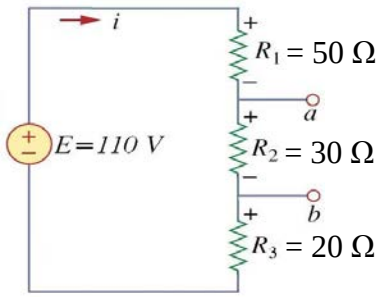

<u>Solution:</u>

<u>Example</u>. Determine the voltage labeled V' shown in the circuit below.

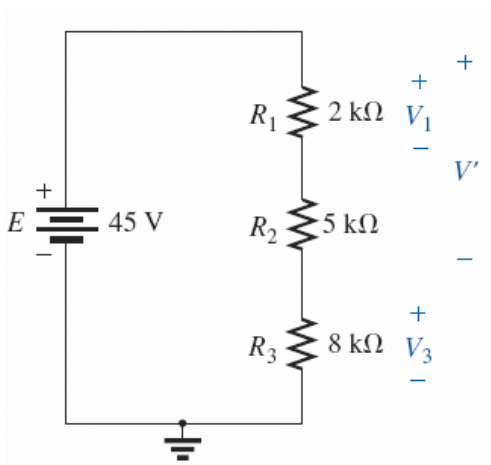

Figure taken from Boylestad, *Introductory Circuit Analysis*, 12th ed., Prentice Hall, 2010

<u>Solution</u>:

EE301 - Lesson 5
Reading: Sections 5.7-5.9

Example. Determine the value of V_3 in the circuit shown below. Note that the voltmeter reads +5.6 V.

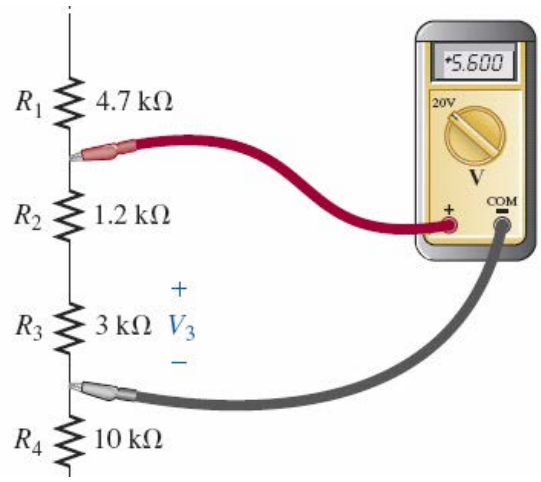

Figure taken from Boylestad, *Introductory Circuit Analysis*, 12th ed., Prentice Hall, 2010

Solution:

Example. Determine the voltage V_{ab} in the circuit below.

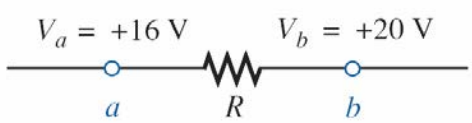

Figure taken from Boylestad, *Introductory Circuit Analysis*, 12th ed., Prentice Hall, 2010

Solution:

Example. Determine the voltage V_a in the circuit below.

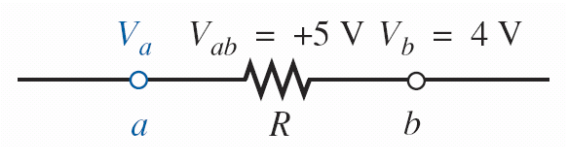

Figure taken from Boylestad, *Introductory Circuit Analysis*, 12th ed., Prentice Hall, 2010

Solution:

EE301 - Lesson 5
Reading: Sections 5.7-5.9

Example. Use the Voltage Divider Rule to find E_S in the circuit below.

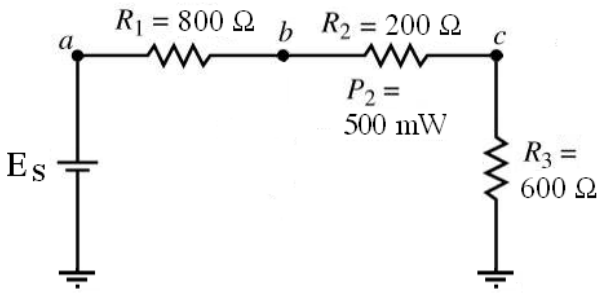

Solution:

Example. Find V_a, V_b, V_c, V_d in the circuit below.

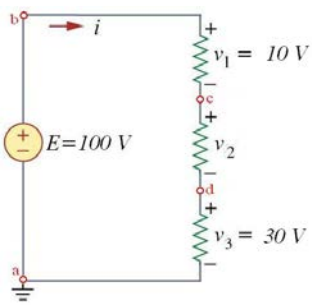

Solution:

EE301 - Lesson 5
Reading: Sections 5.7-5.9

Example. Find V_{bc}, V_{be}, V_{da}, V_{ab}, R_1 in the circuit below.

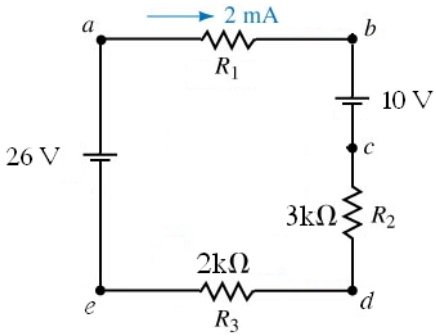

Solution:

Example. In the circuit below, determine V_a, I, and voltage drop across each resistor.

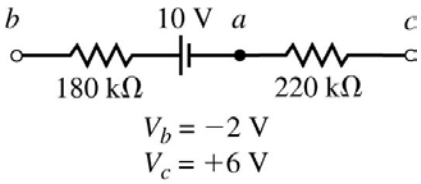

Solution: