EE301 – Lesson 13
Section 9.5

MAX POWER TRANSFER

Learning Objectives

a. Analyze complex series-parallel circuits using Thèvenin's theorem.
b. Apply the Maximum Power Transfer theorem to solve appropriate problems.

Maximum power transfer In some applications, the purpose of a circuit is to provide maximum power to a load. Some examples:

- Stereo amplifiers
- Radio transmitters
- Communications equipment

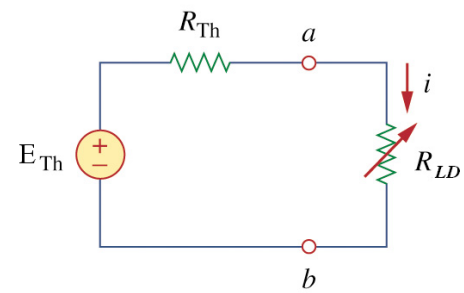

Our question is: If you have a system, what load should you connect to the system in order that the load receives the maximum power that the system can deliver?

The Thévenin equivalent circuit makes this analysis simpler. Consider the case that E_{Th} and R_{Th} are fixed and the load resistance R_{LD} is variable. How might we determine R_{LD} such that P_{LD} is maximized? Solving the circuit above for the power delivered to the load, we find

$$P_{LD} = I_{LD}^2 R_{LD} = \left(\frac{V_{Th}}{R_{Th} + R_{LD}} \right)^2 R_{LD}$$

The right side of the equation for P_{LD}, $P_{LD} = \left(\frac{V_{Th}}{R_{Th} + R_{LD}} \right)^2 R_{LD}$, has only one unknown: R_{LD}.

To find the value of R_{LD} that maximizes P_{LD}, we take the derivative of the equation above, set it equal to zero and solve for R_{LD}. We find that $R_{LD} = R_{TH}$.

Thus, the maximum power is transferred to the load when the load resistance equals the Thevenin resistance as seen from the load. This famous result is termed the *Maximum Power Transfer Theorem*. When $R_{LD} = R_{Th}$, the source and load are said to be *matched*.

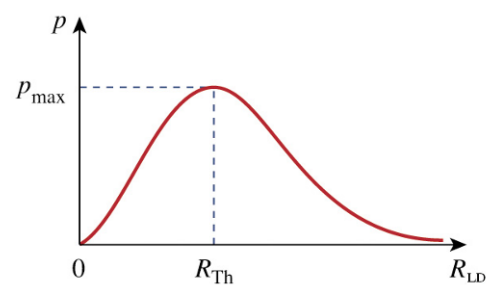

Example. Consider the circuit on the right, which has a variable load resistor. If you want to maximize the power delivered to the load, what value should you choose for the load resistor?

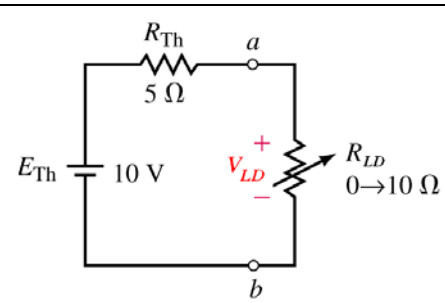

Solution:

Notice the trade-off in the prior example:

- As R_{LD} increases, a higher percentage of the total power is dissipated in the load resistor.
- But since the total resistance is increasing, the total current is dropping, and a point is reached where the total power dissipated by the entire circuit starts dropping.

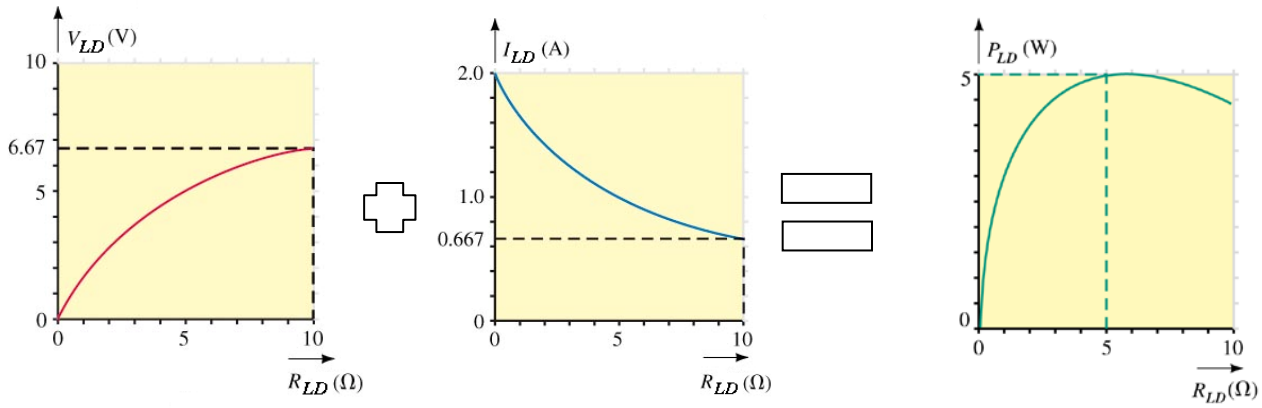

So, the maximum power is delivered when $R_{LD} = R_{Th}$, but what is the value of this power. The power delivered when $R_{LD} = R_{Th}$ is

$$P_{LD} = I_{LD}^{\,2} R_{LD} = \left(\frac{V_{\text{Th}}}{R_{\text{Th}} + R_{LD}}\right)^2 R_{LD} = \left(\frac{V_{\text{Th}}}{R_{\text{Th}} + R_{Th}}\right)^2 R_{Th}$$

$$= V_{Th}^{2} \frac{R_{th}}{4R_{Th}^{2}} = \frac{V_{Th}^{2}}{4R_{Th}} = P_{MAX}$$

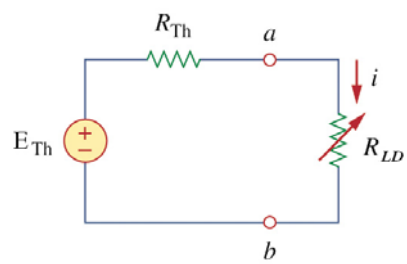

Note that this value of max power occurs when $R_{LD} = R_{Th}$. It is *not true* that $P_{LD} = P_{MAX} = \dfrac{V_{Th}^{\,2}}{4R_{Th}}$ when R_{LD} *does not* equal R_{Th}.

<u>Efficiency</u> When maximum power is delivered to R_L, the efficiency is a mere 50%.

$$\eta = \frac{p_{\text{out}}}{p_{\text{in}}} = \frac{i^2 R_{LD}}{i^2 R_{\text{Th}} + i^2 R_{LD}} \times 100\% = \frac{i^2 R_{\text{Th}}}{i^2 R_{\text{Th}} + i^2 R_{\text{Th}}} \times 100\% = 50\%$$

For communication circuits and amplifiers, attaining the max power transferred is more desirable than attaining a high efficiency.

On the other hand, for power transmission (115 VAC 60 Hz Power), attaining a high efficiency is more desirable than attaining the max power transfer. For this reason, in these circuits, the load resistance is kept much larger than the internal resistance of the voltage source. So, in this latter case, the circuit operates much more efficiently, but delivers less power than it otherwise might.

EE301 – Lesson 13
Section 9.5

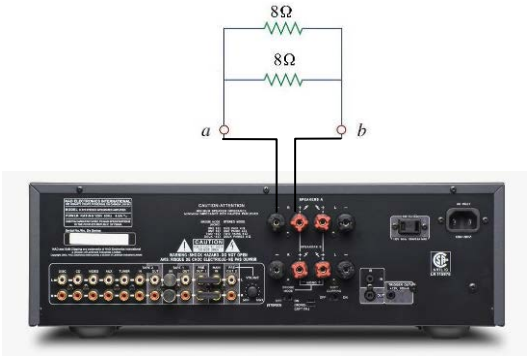

Example: A stereo is rated for maximum output power of 150 W per channel when R_{LD} = 8 Ω.

(a) Sketch the Thèvenin Equivalent Circuit
(b) What would the output power be if two 8 Ω speakers were connected in parallel to one of the channels?

Solution:

Example: Consider the circuit shown on the right.

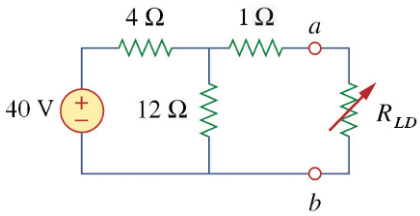

(a) Find the Thévenin equivalent circuit to the left of terminals *a-b*.
(b) Calculate the maximum power transfer to the load if $R_{LD}=R_{TH}$
(c) Determine the power dissipated by R_{LD} for load resistances of 2 and 6Ω.

Solution:

EE301 – Lesson 13

Section 9.5

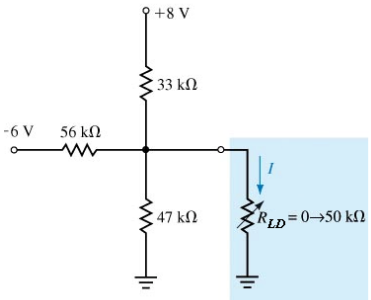

Example: For the circuit shown on the right:

(a) Find the Thèvenin equivalent circuit external to R_{LD}.

(b) Calculate the maximum power transfer to the load if $R_{LD}=R_{TH}$

(c) Determine the power dissipated by R_{LD} when R_{LD}=5kΩ, 50kΩ.

Solution:

EE301 – Lesson 13
Section 9.5

<u>Example:</u> For the circuit shown on the right.

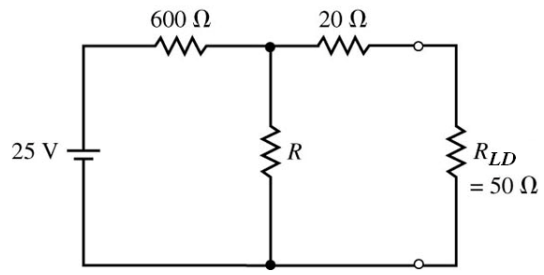

(a) Find the value of R so that $R_{LD}=R_{TH}$

(b) Calculate the maximum power dissipated by R_{LD}

<u>Solution:</u>