Informally: What are CADs?

- A CAD provides an *explicit* representation of semi-algebriac sets, as opposed to the *implicit* representation provided by Tarski formulas.

- **Warning:** "CAD" refers to both a mathematical object and the data structure for representing that object. This dual usage can be confusing.

- **Definition:** For S a finite subset of $\mathbb{R}[x_1, \ldots, x_n]$, the decomposition of $\mathbb{R}^n$ into maximal connected regions in which the elements of S have invariant sign is called the *natural algebraic decomposition* defined by S.

- **Definition:** The *level* of polynomial $p \in \mathbb{R}[x_1, \ldots, x_n]$ is the largest k such that p has positive degree in x_k.

Example: a CAD as a "mathematical object"

$$P_3 = \{x_1^2 + x_2^2 + x_3^2 - 4\}$$
$$P_2 = \{x_2^2 + x_1^2 - 4\}$$
$$P_1 = \{x_1 + 2, x_1 - 2\}$$

Example: a CAD as a "mathematical object"

$$P_3 = \{x_1^2 + x_2^2 + x_3^2 - 4\}$$
$$P_2 = \{x_2^2 + x_1^2 - 4\}$$
$$P_1 = \{x_1 + 2, x_1 - 2\}$$

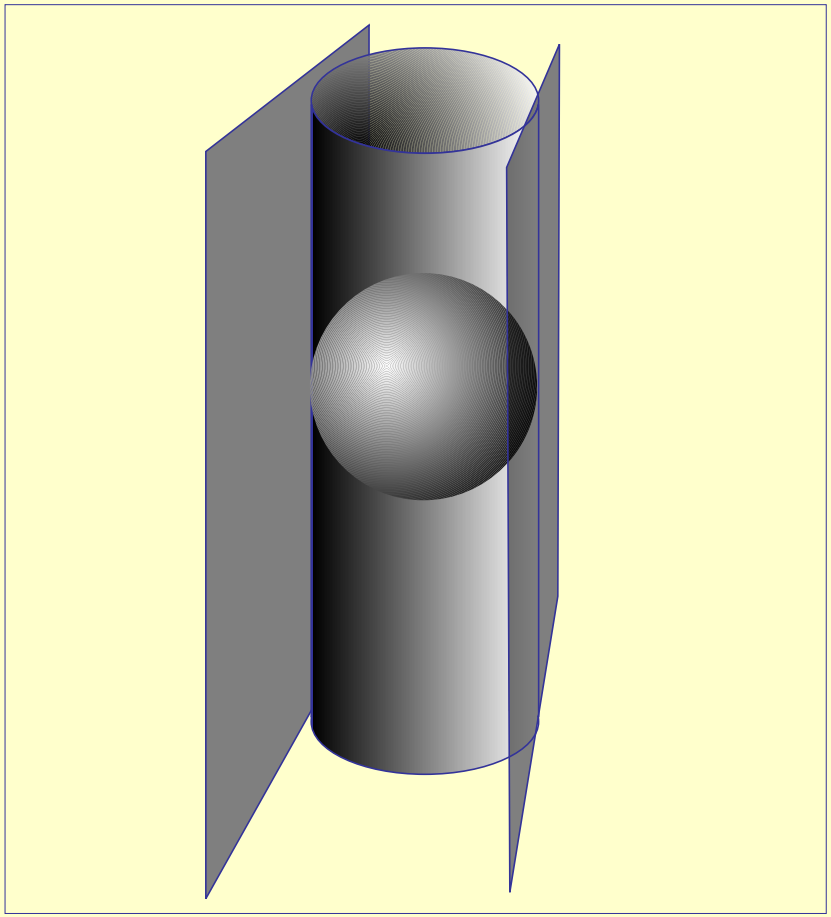

Example: a CAD as a "mathematical object"

$$P_3 = \{x_1^2 + x_2^2 + x_3^2 - 4\}$$
$$P_2 = \{x_2^2 + x_1^2 - 4\}$$
$$P_1 = \{x_1 + 2, x_1 - 2\}$$

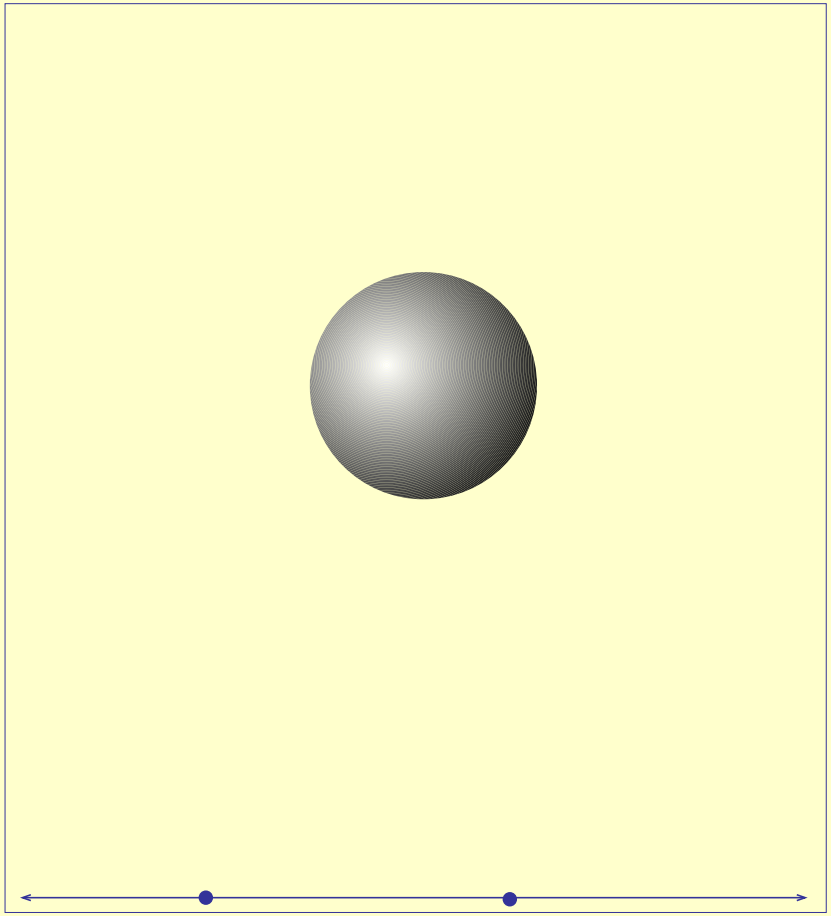

Example: a CAD as a "mathematical object"

$$P_3 = \{x_1^2 + x_2^2 + x_3^2 - 4\}$$
$$P_2 = \{x_2^2 + x_1^2 - 4\}$$
$$P_1 = \{x_1 + 2, x_1 - 2\}$$

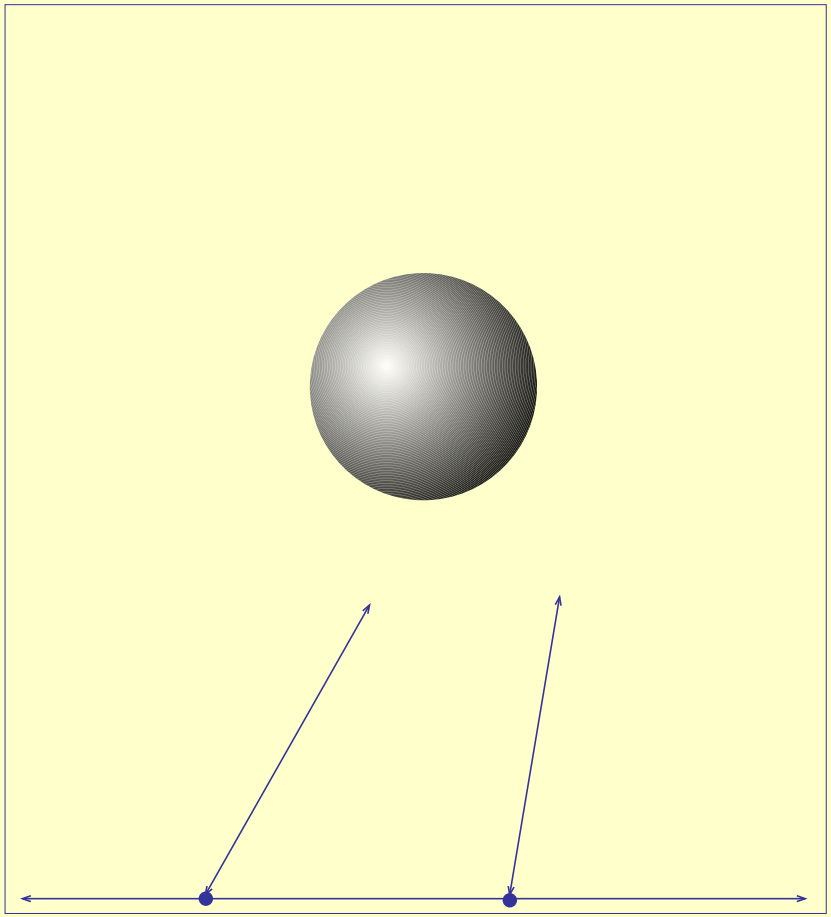

Example: a CAD as a "mathematical object"

$$P_3 = \{x_1^2 + x_2^2 + x_3^2 - 4\}$$
$$P_2 = \{x_2^2 + x_1^2 - 4\}$$
$$P_1 = \{x_1 + 2, x_1 - 2\}$$

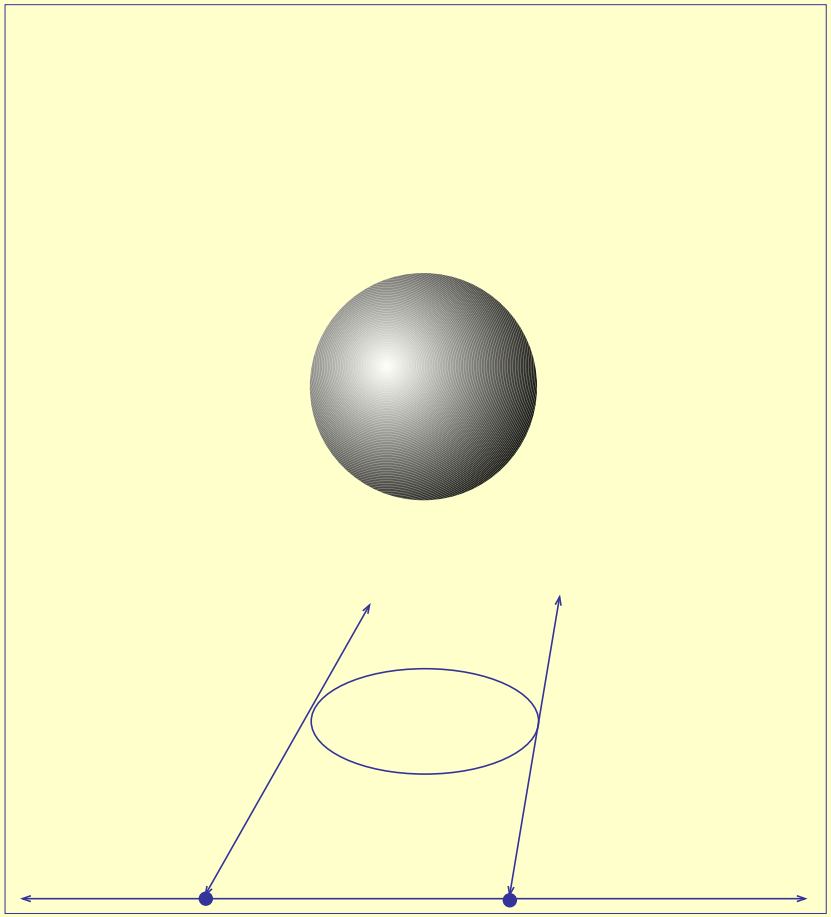

Example: a CAD as a "mathematical object"

$$P_3 = \{x_1^2 + x_2^2 + x_3^2 - 4\}$$
$$P_2 = \{x_2^2 + x_1^2 - 4\}$$
$$P_1 = \{x_1 + 2, x_1 - 2\}$$

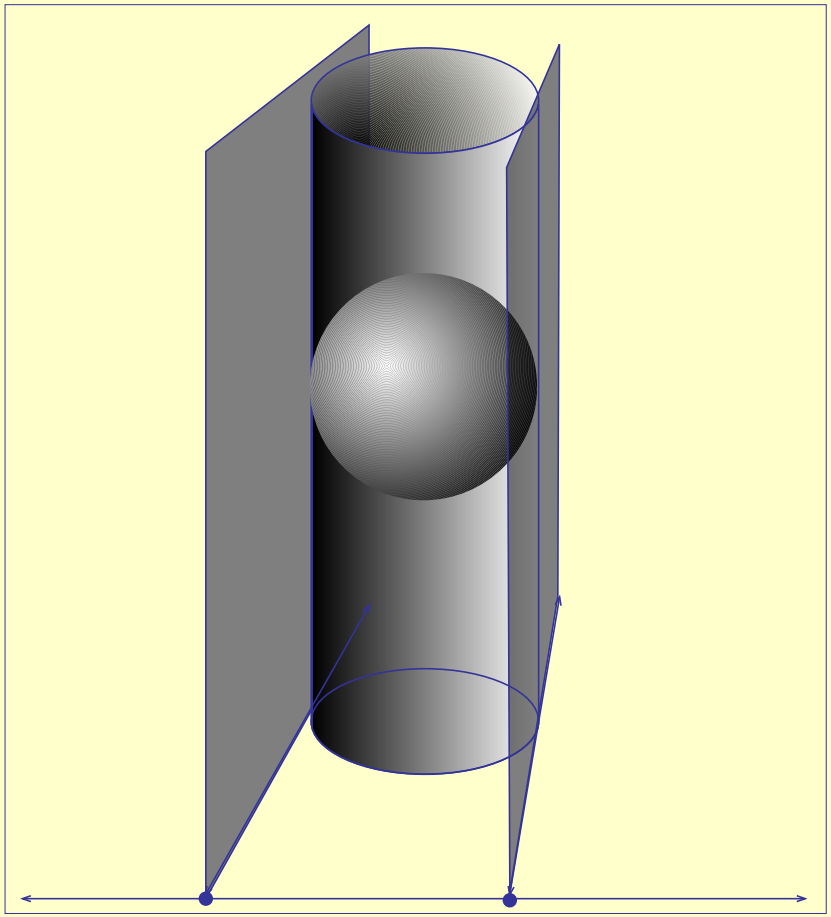

Example: a CAD as a "mathematical object"

$$P_3 = \{x_1^2 + x_2^2 + x_3^2 - 4\}$$
$$P_2 = \{x_2^2 + x_1^2 - 4\}$$
$$P_1 = \{x_1 + 2, x_1 - 2\}$$

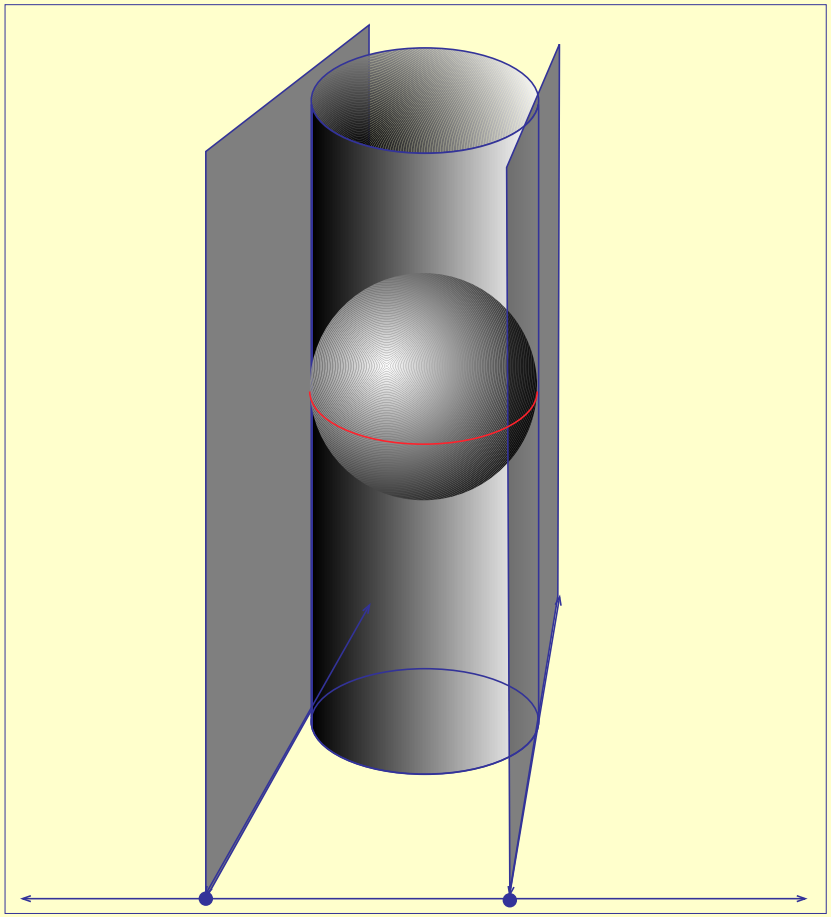

Example: a CAD as a "mathematical object"

$$P_3 = \{x_1^2 + x_2^2 + x_3^2 - 4\}$$
$$P_2 = \{x_2^2 + x_1^2 - 4\}$$
$$P_1 = \{x_1 + 2, x_1 - 2\}$$

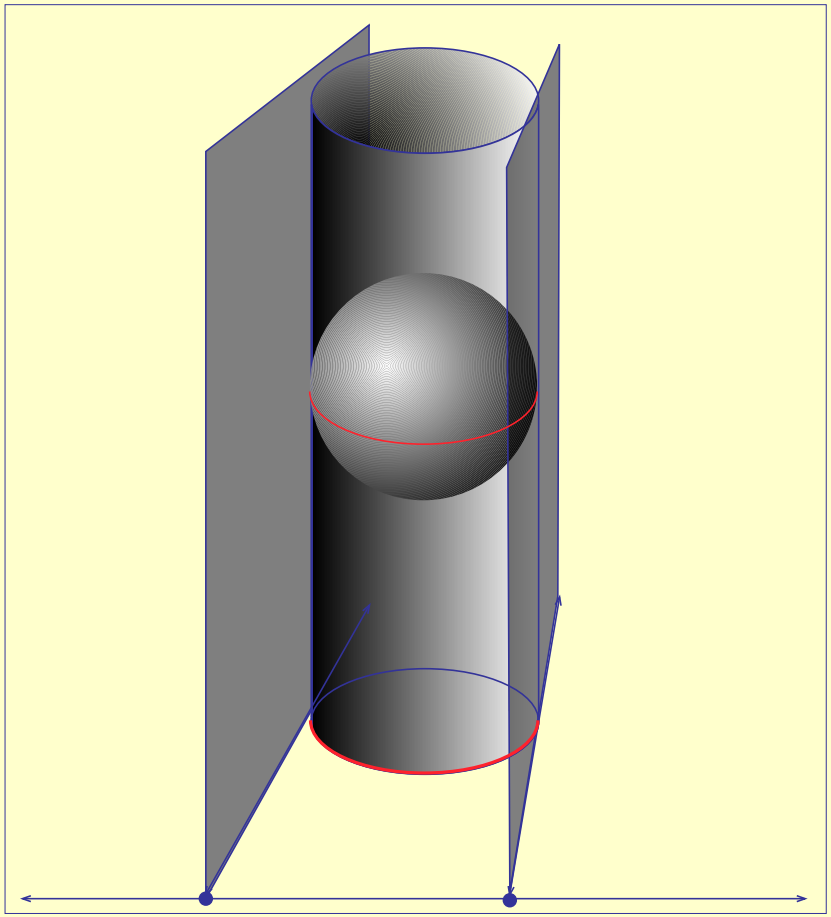

Example: a CAD as a "mathematical object"

$$P_3 = \{x_1^2 + x_2^2 + x_3^2 - 4\}$$
$$P_2 = \{x_2^2 + x_1^2 - 4\}$$
$$P_1 = \{x_1 + 2, x_1 - 2\}$$

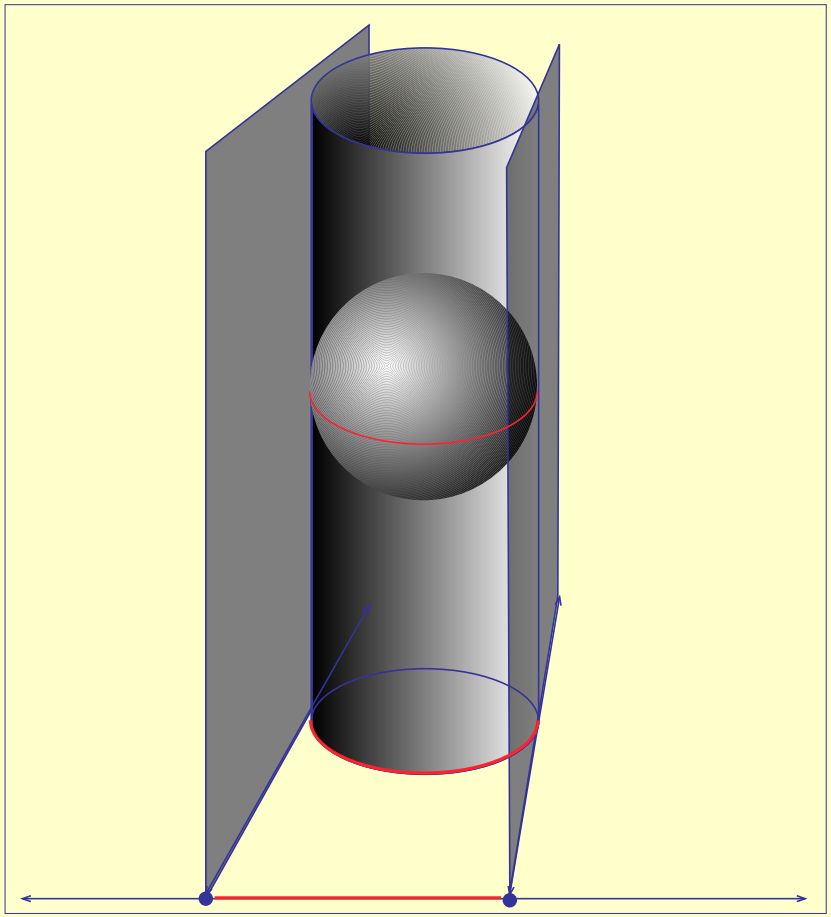

Example: a CAD as a "data structure"

$$P_3 = \{x_1^2 + x_2^2 + x_3^2 - 4\}$$
$$P_2 = \{x_2^2 + x_1^2 - 4\}$$
$$P_1 = \{x_1 + 2, x_1 - 2\}$$

Example: a CAD as a "data structure"

$$P_3 = \{x_1^2 + x_2^2 + x_3^2 - 4\}$$
$$P_2 = \{x_2^2 + x_1^2 - 4\}$$
$$P_1 = \{x_1 + 2, x_1 - 2\}$$

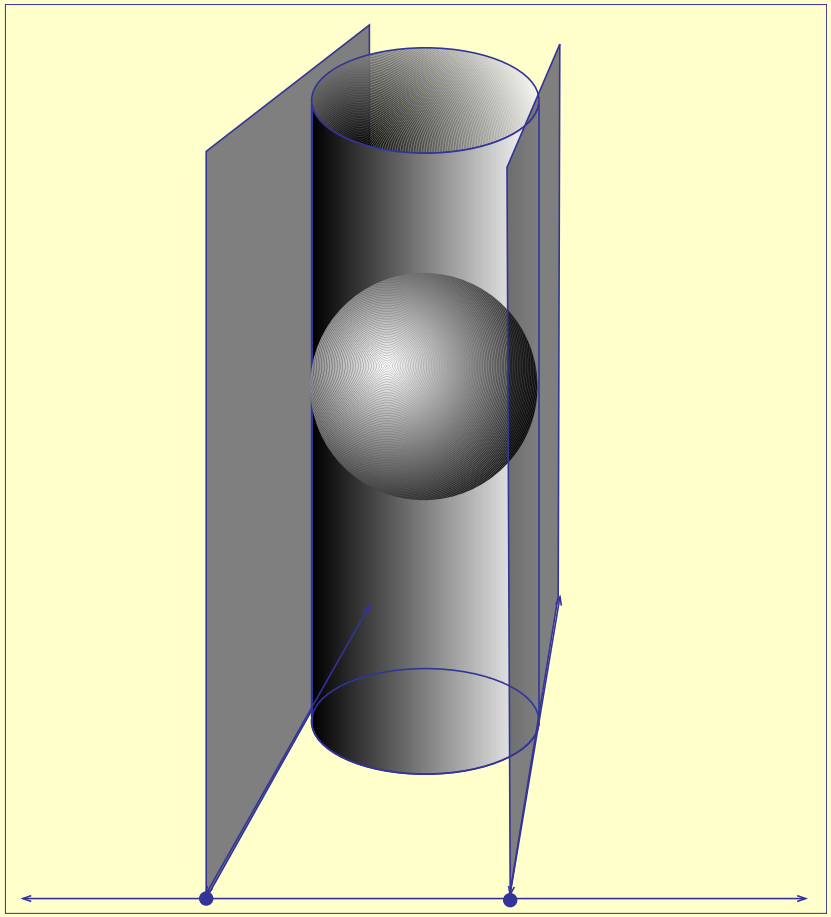

Example: a CAD as a "data structure"

$$P_3 = \{x_1^2 + x_2^2 + x_3^2 - 4\}$$
$$P_2 = \{x_2^2 + x_1^2 - 4\}$$
$$P_1 = \{x_1 + 2, x_1 - 2\}$$

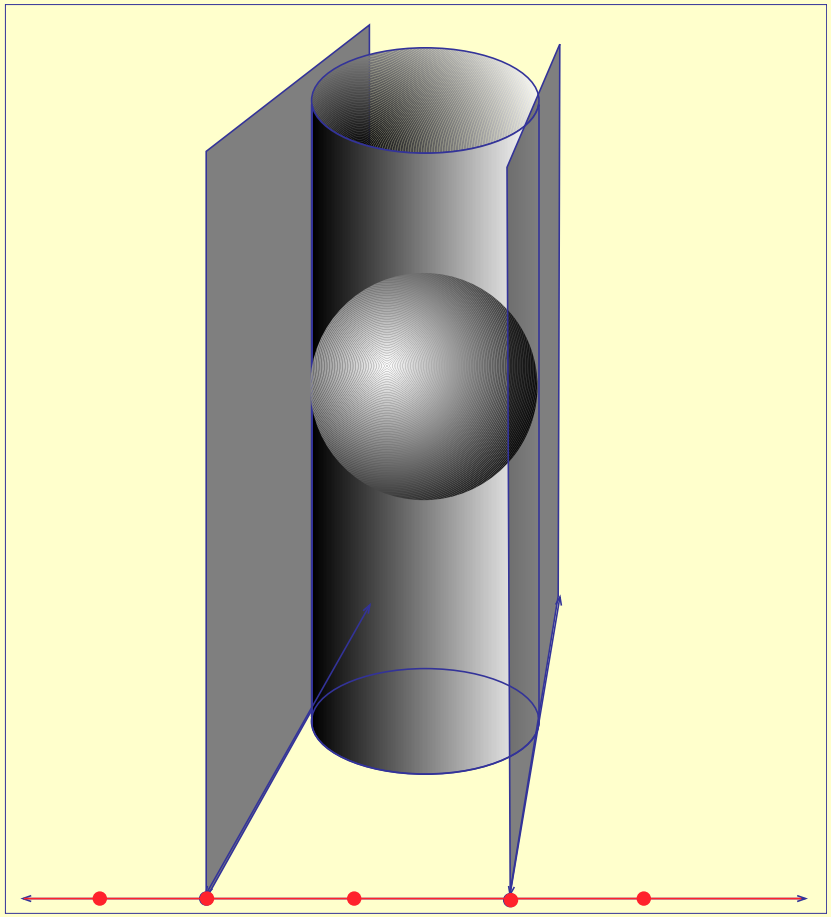

Example: a CAD as a "data structure"

$$P_3 = \{x_1^2 + x_2^2 + x_3^2 - 4\}$$
$$P_2 = \{x_2^2 + x_1^2 - 4\}$$
$$P_1 = \{x_1 + 2, x_1 - 2\}$$

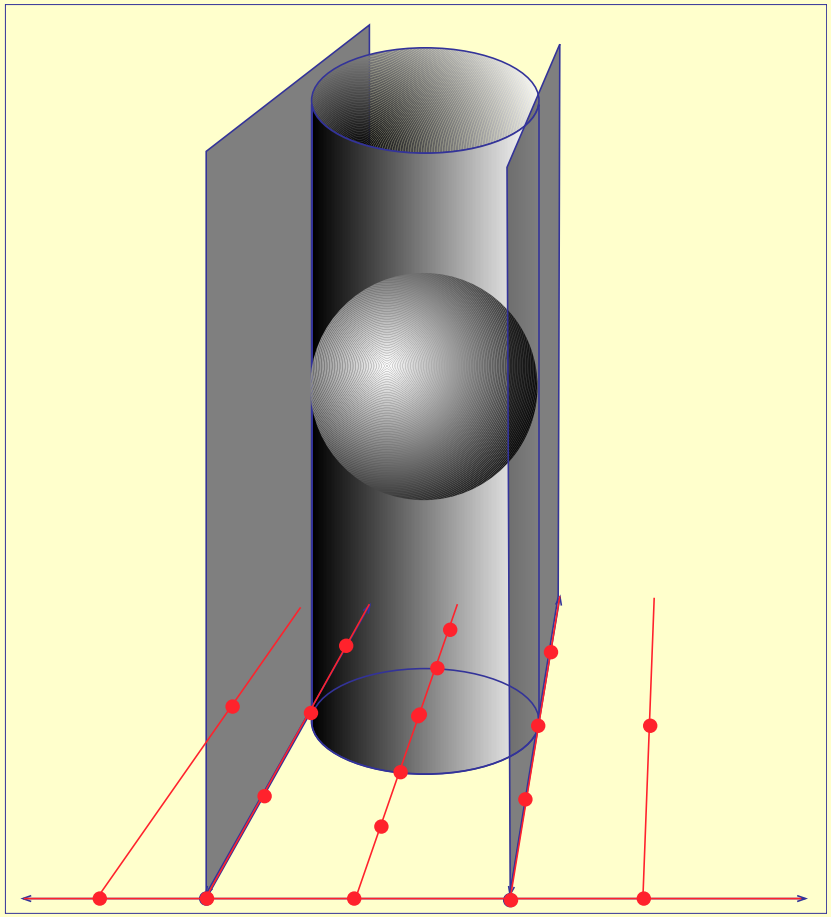

Example: a CAD as a "data structure"

$$P_3 = \{x_1^2 + x_2^2 + x_3^2 - 4\}$$
$$P_2 = \{x_2^2 + x_1^2 - 4\}$$
$$P_1 = \{x_1 + 2, x_1 - 2\}$$

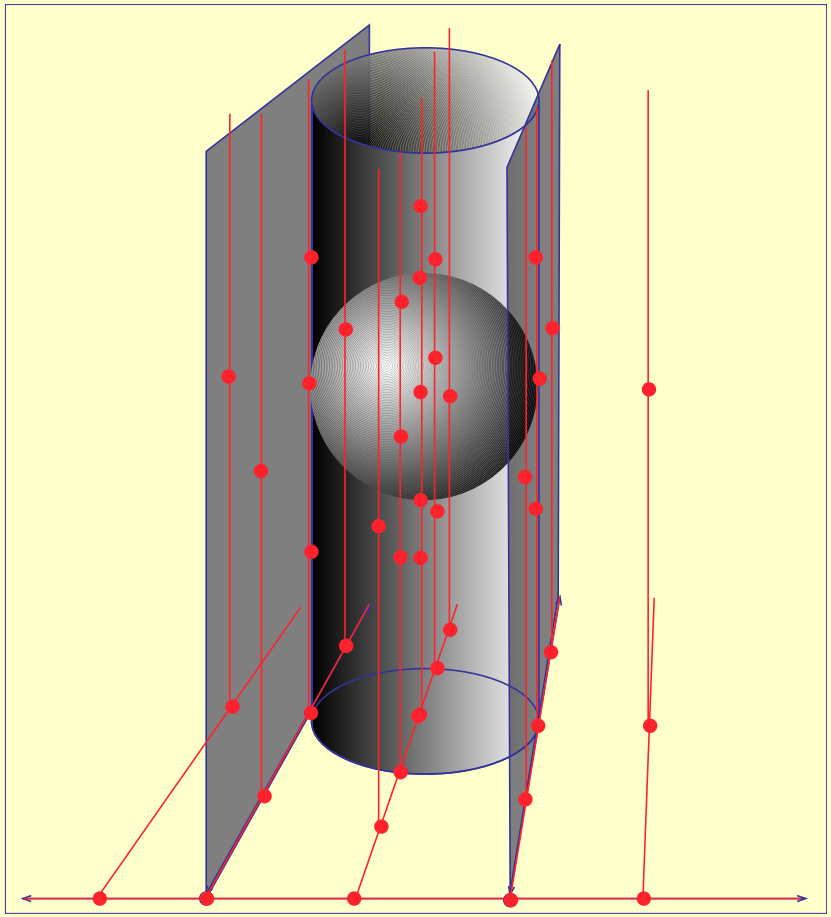

Represent $x_1 - x_2 < 0 \ \wedge \ x_1^2 + x_2^2 - 1 \leq 0$ with a CAD

Projection Factor Set

$P_2 = \{x_2^2 + x_1^2 - 1, x_1 - x_2\}$

$P_1 = \{x_1 + 1, x_1 - 1, 2x_1^2 - 1\}$

Represent $x_1 - x_2 < 0 \ \wedge \ x_1^2 + x_2^2 - 1 \leq 0$ with a CAD

Projection Factor Set

$P_2 = \{x_2^2 + x_1^2 - 1, x_1 - x_2\}$

$P_1 = \{x_1 + 1, x_1 - 1, 2x_1^2 - 1\}$

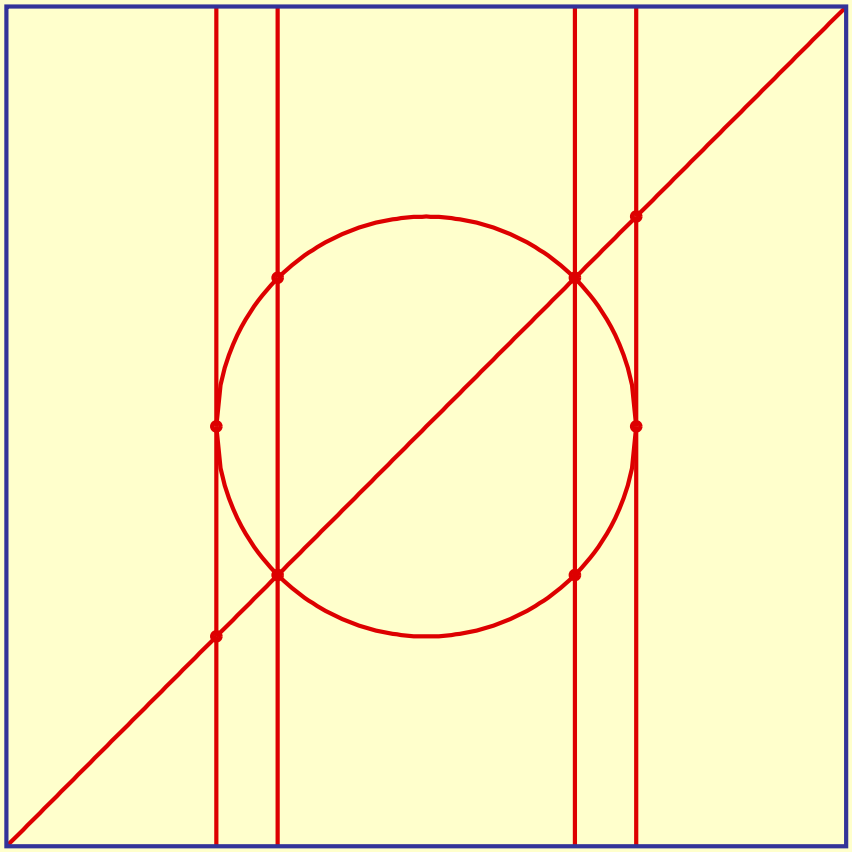

Represent $x_1 - x_2 < 0 \ \wedge \ x_1^2 + x_2^2 - 1 \leq 0$ with a CAD

Projection Factor Set

$P_2 = \{x_2^2 + x_1^2 - 1, x_1 - x_2\}$

$P_1 = \{x_1 + 1, x_1 - 1, 2x_1^2 - 1\}$

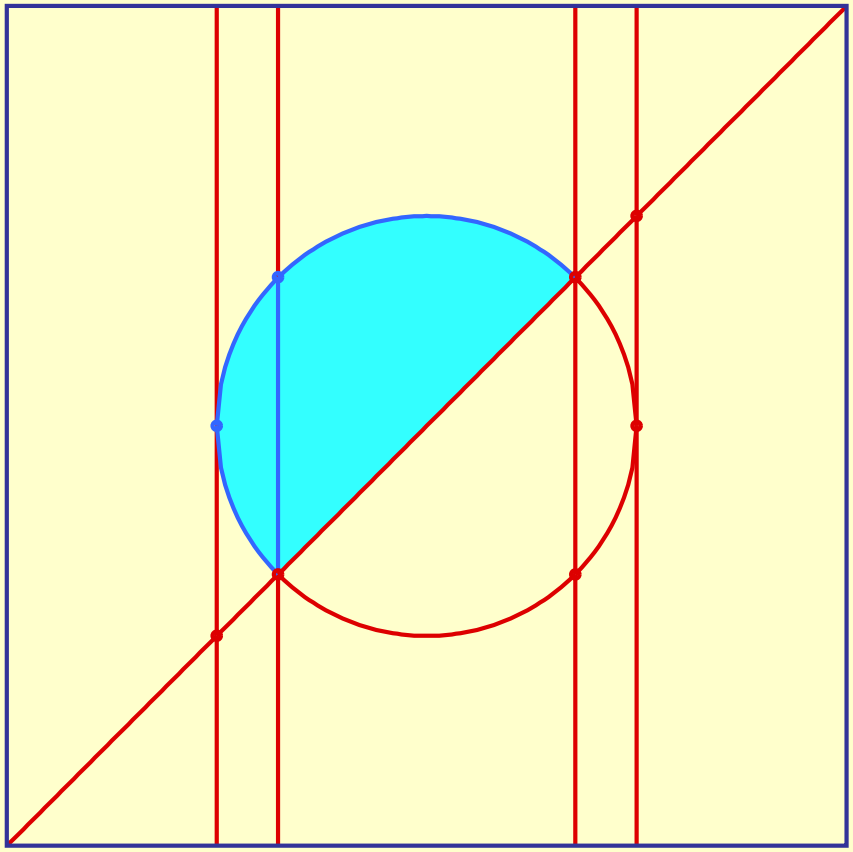

Eliminate x_2 from $\exists x_2[2x_2^2 < x_1^2(2x_1+3) \wedge x_1^2 + x_2^2 \leq 1]$

Projection Factor Set

$P_2 = \{2x_2^2 - 2x_1^3 - 3x_1^2, x_2^2 + x_1^2 - 1\}$

$P_1 = \{2x_1+3, x_1, x_1+1, x_1-1, 2x_1^3+5x_1^2-2\}$

Eliminate x_2 from $\exists x_2[2x_2^2 < x_1^2(2x_1+3) \wedge x_1^2 + x_2^2 \leq 1]$

Projection Factor Set

$P_2 = \{2x_2^2 - 2x_1^3 - 3x_1^2, x_2^2 + x_1^2 - 1\}$

$P_1 = \{2x_1+3, x_1, x_1+1, x_1-1, 2x_1^3+5x_1^2-2\}$

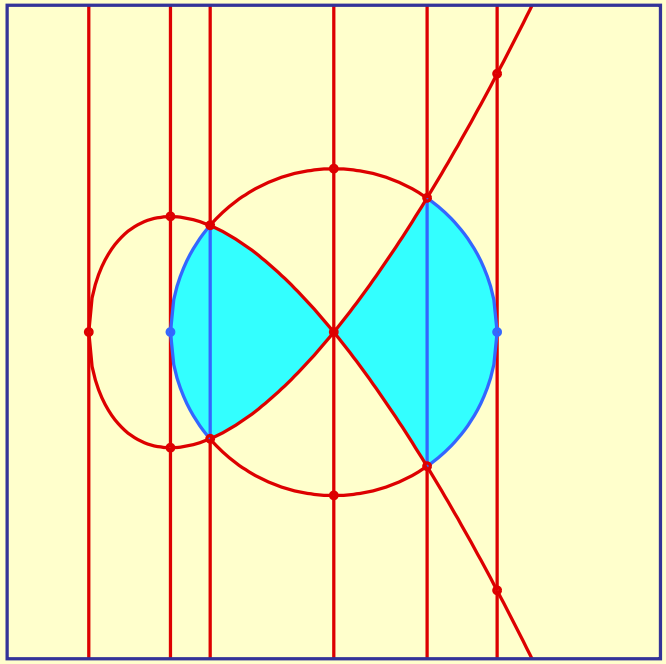

Eliminate x_2 from $\exists x_2[2x_2^2 < x_1^2(2x_1+3) \wedge x_1^2 + x_2^2 \leq 1]$

Projection Factor Set

$P_2 = \{2x_2^2 - 2x_1^3 - 3x_1^2, x_2^2 + x_1^2 - 1\}$

$P_1 = \{2x_1+3, x_1, x_1+1, x_1-1, 2x_1^3+5x_1^2-2\}$

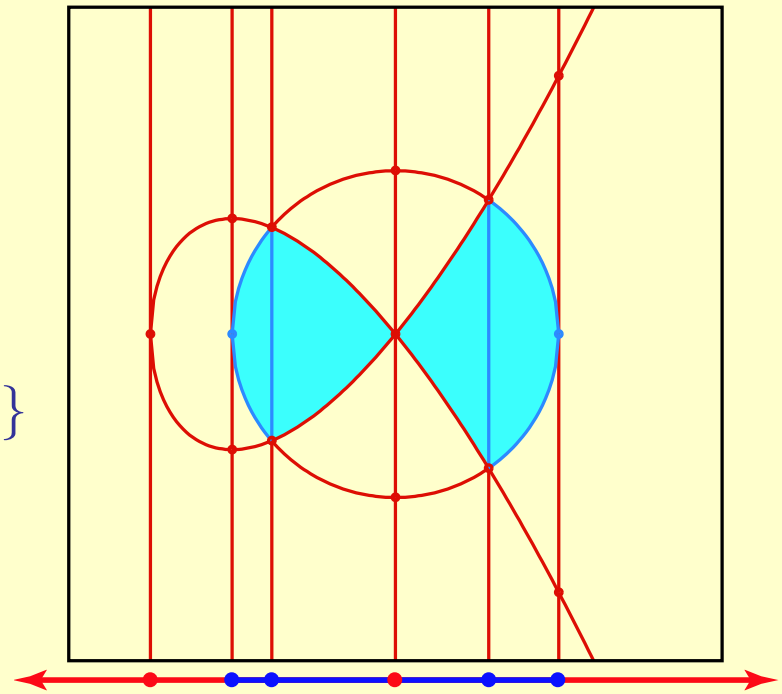

Eliminate x_2 from $\exists x_2[2x_2^2 < x_1^2(2x_1+3) \wedge x_1^2 + x_2^2 \leq 1]$

Projection Factor Set

$P_2 = \{2x_2^2 - 2x_1^3 - 3x_1^2, x_2^2 + x_1^2 - 1\}$

$P_1 = \{2x_1+3, x_1, x_1+1, x_1-1, 2x_1^3+5x_1^2-2\}$

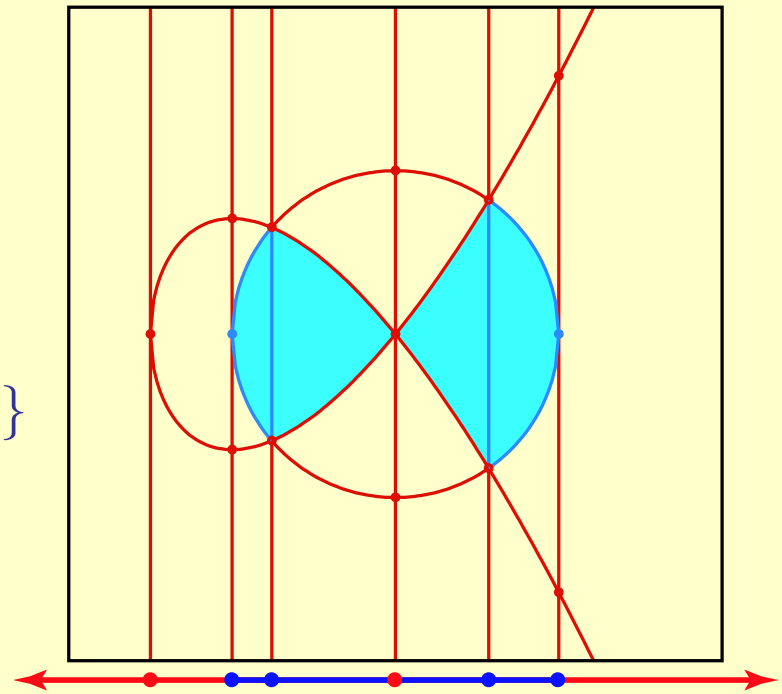

Read off $-1 \leq x_1 \wedge x_1 \leq 1 \wedge x_1 \neq 0$ from the induced CAD of 1-space.

Simplifying a formula with CAD

Problem: Simplify

$$[2x_2^2 < x_1^2(2x_1+3) \wedge (x_1+1)^2 + x_2^2 \leq 1]$$
$$\wedge$$
$$[3x_2^2 < -5x_1 - 1 \wedge x_2 > -x_1 - 2 \wedge x_2 < x_1 + 2]$$

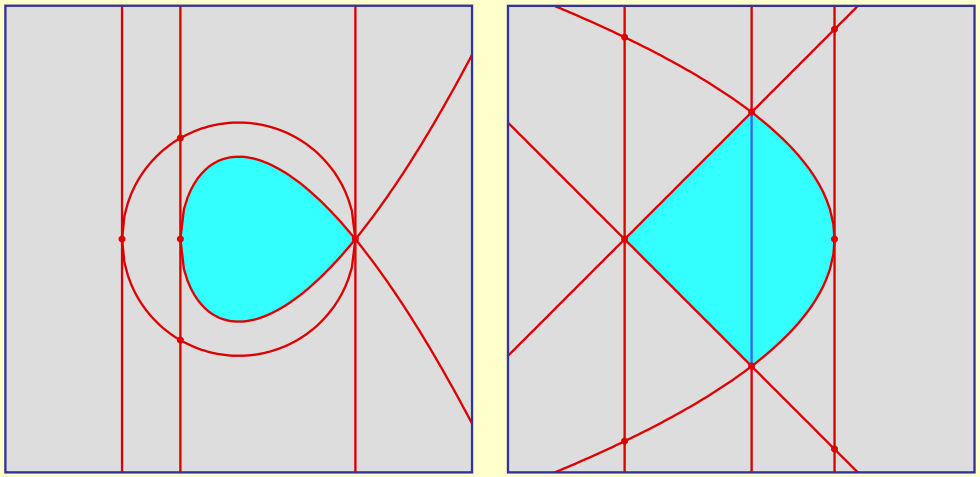

Simplifying a formula with CAD

Problem: Simplify

$$[2x_2^2 < x_1^2(2x_1+3) \wedge (x_1+1)^2 + x_2^2 \leq 1]$$
$$\wedge$$
$$[3x_2^2 < -5x_1 - 1 \wedge x_2 > -x_1 - 2 \wedge x_2 < x_1 + 2]$$

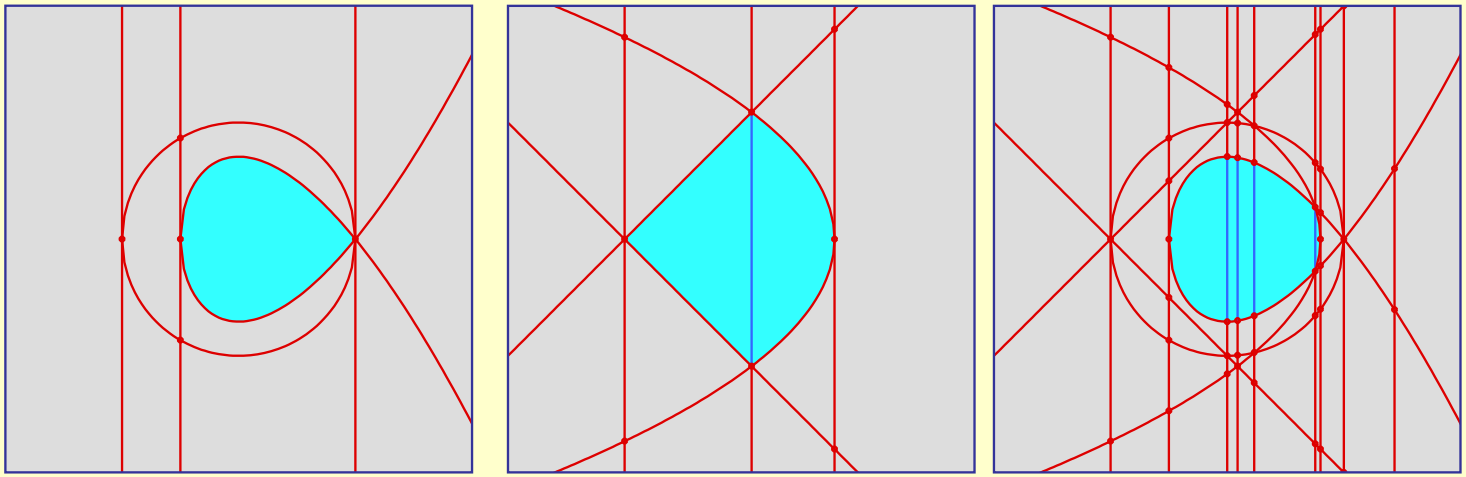

Simplifying a formula with CAD

Problem: Simplify

$$[2x_2^2 < x_1^2(2x_1+3) \wedge (x_1+1)^2 + x_2^2 \leq 1]$$
$$\wedge$$
$$[3x_2^2 < -5x_1 - 1 \wedge x_2 > -x_1 - 2 \wedge x_2 < x_1 + 2]$$

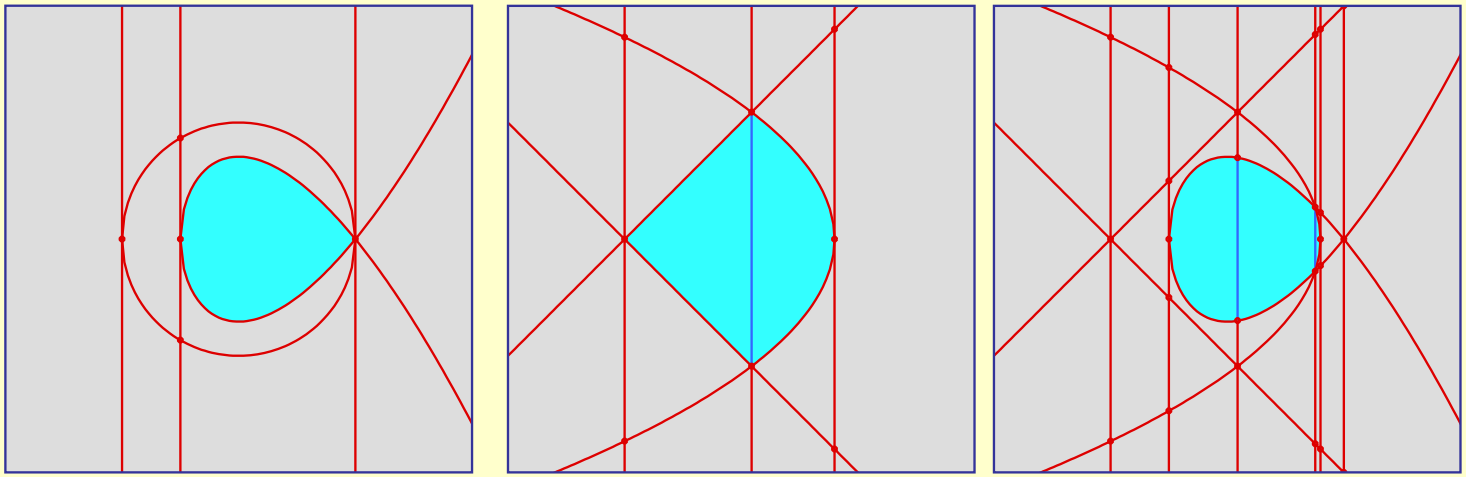

Simplifying a formula with CAD

Problem: Simplify

$$[2x_2^2 < x_1^2(2x_1+3) \wedge (x_1+1)^2 + x_2^2 \leq 1]$$
$$\wedge$$
$$[3x_2^2 < -5x_1 - 1 \wedge x_2 > -x_1 - 2 \wedge x_2 < x_1 + 2]$$

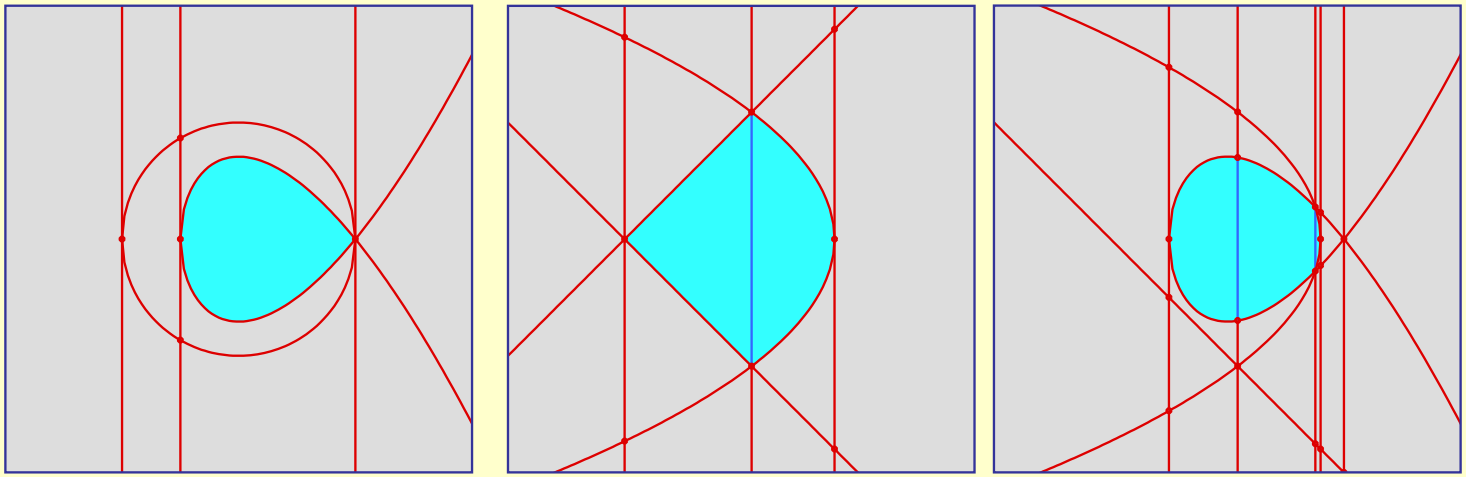

Simplifying a formula with CAD

Problem: Simplify

$$[2x_2^2 < x_1^2(2x_1+3) \wedge (x_1+1)^2 + x_2^2 \leq 1]$$
$$\wedge$$
$$[3x_2^2 < -5x_1 - 1 \wedge x_2 > -x_1 - 2 \wedge x_2 < x_1 + 2]$$

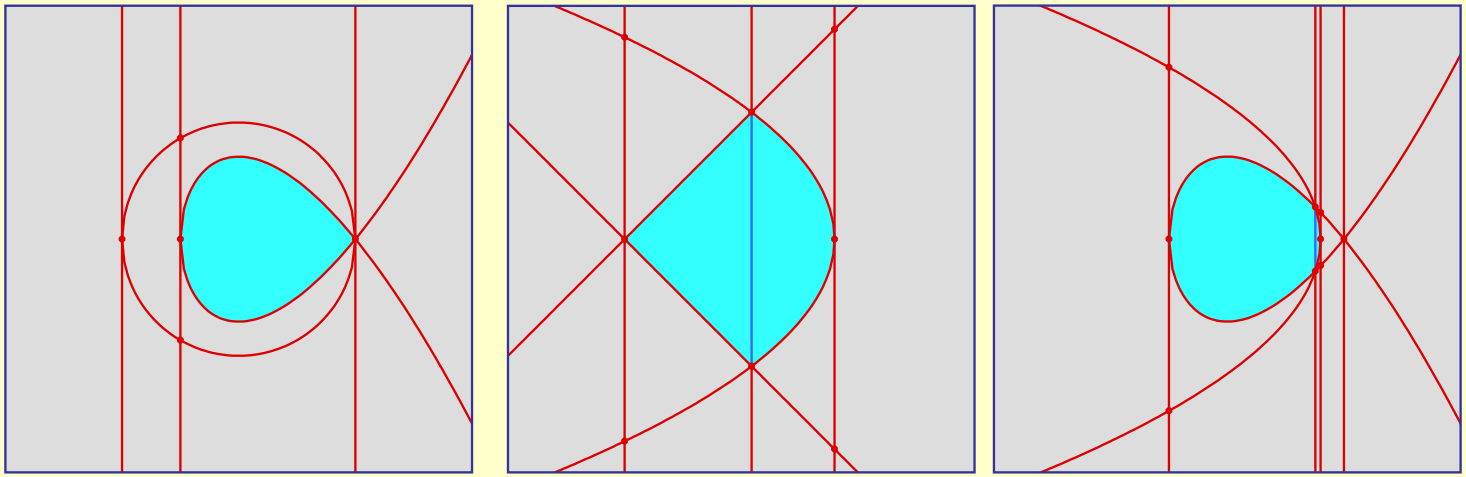

Simplifying a formula with CAD

Problem: Simplify

$$[2x_2^2 < x_1^2(2x_1+3) \wedge (x_1+1)^2 + x_2^2 \leq 1]$$
$$\wedge$$
$$[3x_2^2 < -5x_1 - 1 \wedge x_2 > -x_1 - 2 \wedge x_2 < x_1 + 2]$$

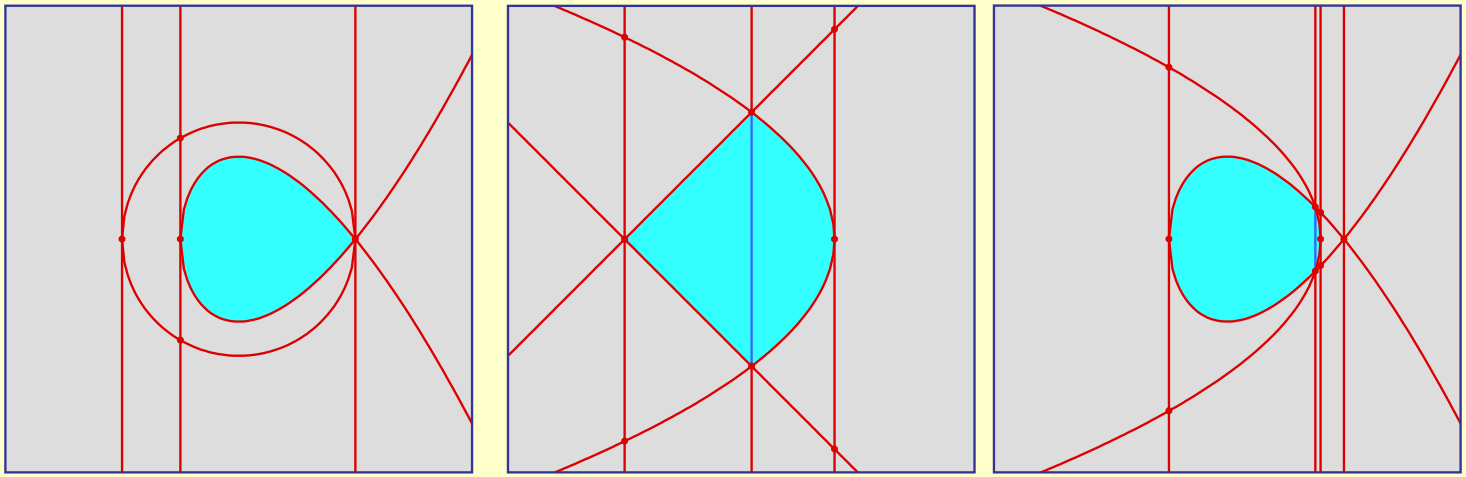

Solution: $2x_2^2 < x_1^2(2x_1+3) \wedge 3x_2^2 < -5x_1 - 1$

The basic plan for CADs

Start with a Tarski formula F defining a semi-algebraic set

1. Compute P, a projection factor set that contains the polynomials in F
2. Construct a CAD data structure from P
3. Annotate each sample point with the truth value of F at that point
4. Depending on your problem ...
   (a) determine dimension, return an explicit point satisfying formula, etc., or
   (b) propagate truth values, simplify CAD, etc., and return defining Tarski formula for the set represented by the new CAD