Op Amps and Phasor Analysis

CDR Charles B. Cameron

November 18, 2005

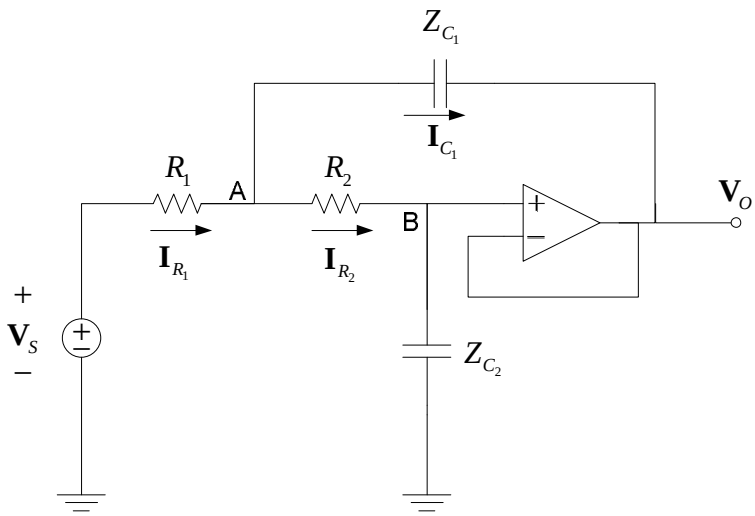

Figure 1: Schematic diagram

In the schematic diagram of Figure 1 we note, first, that $\mathbf{V}_B = \mathbf{V}_O$ if we treat the op amp as ideal. Using the voltage-divider rule, we find that

$$\begin{aligned}
\mathbf{V}_O = \mathbf{V}_B &= \left(\frac{Z_{C_2}}{R_2 + Z_{C_2}}\right)\mathbf{V}_A \\
&= \left(\frac{1}{1 + \frac{R_2}{Z_{C_2}}}\right)\mathbf{V}_A \\
\mathbf{V}_O &= \left(\frac{1}{1 + j\omega R_2 C_2}\right)\mathbf{V}_A
\end{aligned}$$

or

$$\mathbf{V}_A = (1 + j\omega R_2 C_2)\,\mathbf{V}_O. \tag{1}$$

It will also be useful to write this as

$$\mathbf{V}_A - \mathbf{V}_O = j\omega R_2 C_2 \mathbf{V}_O. \tag{2}$$

Kirchoff's Current Law and the use of Ohm's Law for passive components gives us

$$\mathbf{I}_{R_1} - \mathbf{I}_{R_2} - \mathbf{I}_{C_1} = 0$$

$$\frac{\mathbf{V}_S - \mathbf{V}_A}{R_1} - \frac{\mathbf{V}_A - \mathbf{V}_O}{R_2} - \frac{\mathbf{V}_A - \mathbf{V}_O}{Z_{C_1}} = 0. \tag{3}$$

Substituting (1) and (2) into (3) gives

$$\begin{aligned}
\frac{\mathbf{V}_S - (1 + j\omega R_2 C_2)\,\mathbf{V}_O}{R_1} - \frac{j\omega R_2 C_2 \mathbf{V}_O}{R_2} - \frac{j\omega R_2 C_2 \mathbf{V}_O}{Z_{C_1}} &= 0 \\
\frac{\mathbf{V}_S}{R_1} - \frac{(1 + j\omega R_2 C_2)\,\mathbf{V}_O}{R_1} - j\omega C_2 \mathbf{V}_O - j\omega R_2 C_2 \mathbf{V}_O j\omega C_1 &= 0 \\
\mathbf{V}_S - (1 + j\omega R_2 C_2)\,\mathbf{V}_O - j\omega R_1 C_2 \mathbf{V}_O + \omega^2 R_1 R_2 C_1 C_2 \mathbf{V}_O &= 0
\end{aligned}$$

$$\begin{aligned}
\frac{\mathbf{V}_O}{\mathbf{V}_S} &= \frac{1}{(1 + j\omega R_2 C_2) + j\omega R_1 C_2 - \omega^2 R_1 R_2 C_1 C_2} \\
&= \frac{1}{(1 - \omega^2 R_1 R_2 C_1 C_2 + j\omega (R_1 + R_2) C_2)} \\
&= \frac{1}{(R_1 R_2 C_1 C_2)\left(\frac{1}{R_1 R_2 C_1 C_2} - \omega^2 + j\omega \frac{R_1 + R_2}{R_1 R_2 C_1 C_2} C_2\right)} \\
&= \frac{1}{(R_1 R_2 C_1 C_2)\left(\frac{1}{R_1 R_2 C_1 C_2} - \omega^2 + j\omega \frac{1}{(R_1 || R_2) C_1}\right)} \\
\frac{\mathbf{V}_O}{\mathbf{V}_S} &= \frac{\omega_0^2}{(\omega_0^2 - \omega^2) + j2\zeta\omega}
\end{aligned} \tag{4}$$

where

$$\omega_0 = \frac{1}{\sqrt{R_1 R_2 C_1 C_2}} \tag{5}$$

and

$$\zeta = \frac{1}{2(R_1 || R_2) C_1}. \tag{6}$$

When the parameter $\zeta = 0$, $\mathbf{V}_O/\mathbf{V}_S$ ranges from 1 when $\omega = 0$ to 0 when $\omega \to \infty$. However, there is a point when $\omega = \omega_0$ when $\mathbf{V}_O/\mathbf{V}_S$ goes to infinity. However, ζ cannot really reach 0, as (6) makes clear.

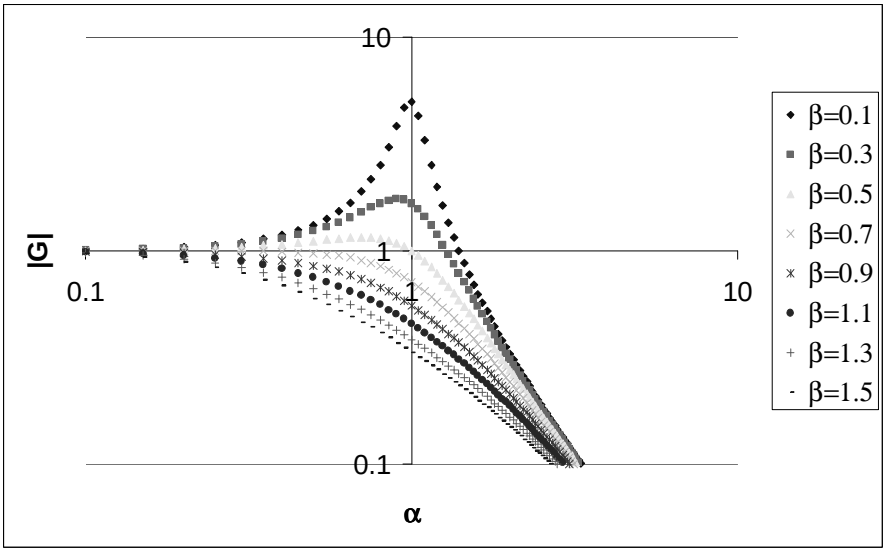

Figure 2: Gain of the System

To get an idea what this function does, divide the numerator and denominator of (4) by ω_0^2 and define the new parameters $\alpha = \omega/\omega_0$ and $\beta = \zeta/\omega_0$:

$$\frac{\mathbf{V}_O}{\mathbf{V}_S} = \frac{1}{(1-\alpha^2) + j2\alpha\beta}. \tag{7}$$

The parameter α amounts to a "normalized" frequency, one whose units are ω_0. The parameter β is a damping factor whose effect will be seen when we plot the magnitude of this complex function,

$$G = \left|\frac{\mathbf{V}_O}{\mathbf{V}_S}\right| = \frac{1}{\sqrt{(1-\alpha^2)^2 + (2\alpha\beta)^2}}. \tag{8}$$

This is plotted as a function of α for several selected values of β in Figure 2. In the plot, both the horizontal and the vertical axes are plotted logarithmically, not linearly.

Note that when β is quite small, there is a point where the gain gets very large. For large β, however, the gain shrinks uniformly with an increase in α.

This transfer function defines a type of low-pass filter: low frequencies can get through it, but large frequencies are suppressed. Intermediate frequencies are either enhanced or suppressed, depending on the value of β.

By suitably selecting the parameter β, we can get the transfer characteristic we want. Choosing ω_0 amounts to choosing the frequency corresponding to the center of the graph. Once we have done this, in turn, we can choose the parameter ζ. Once ω_0 and ζ have been selected, we can choose circuit

parameters R_1, R_2, C_1, and C_2 to obtain them and so build a circuit that actually behaves in the desired manner.

In general it would be very difficult to achieve any particular desired behavior without first obtaining the transfer function algebraically and investigating its meaning.