EE221 Introduction to Electrical Engineering I

Fall 2006

Lab Project: Bandpass Filter

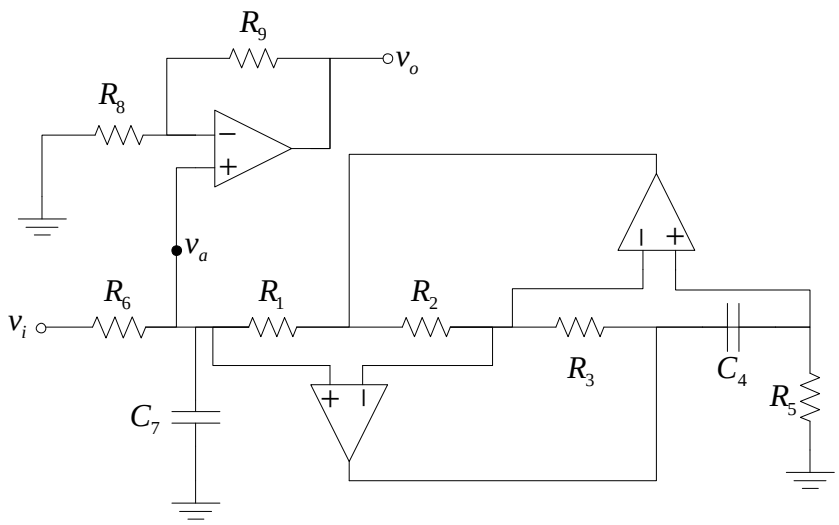

Figure 1: Op Amp Realization of a Bandpass Filter

1 Background

A bandpass filter is a frequency-selective circuit that permits sinusoids within a specified frequency range to pass through it and suppresses sinusoids with frequencies outside this range. Such circuits are present in all radio receivers. The circuit in Figure 1 is a circuit that is capable of providing a bandpass characteristic.

The input to the circuit is signal $v_i(t)$, a sinusoid with a frequency $\omega = 2\pi f$. The output from the circuit is $v_o(t)$, a sinusoid of the same frequency. However, its amplitude and phase will generally differ from those of the input.

In the schematic, intermediate signal $v_a(t)$ is fed into the output amplifier with resistors R_8 and R_9 to provide an amplified version of the bandpass characteristic. If we consider the three voltages in the frequency domain, we have phasors $\mathbf{V}_i$, $\mathbf{V}_a$, and $\mathbf{V}_o$.

The overall circuit output $\mathbf{V}_o$ is obtained from $\mathbf{V}_a$ by using the output amplifier with gain $K = 1 + \frac{R_9}{R_8}$.

An equation for the relationship between $\mathbf{V}_o$ and $\mathbf{V}_i$ is given by the transfer function:

$$T(j\omega) = \frac{\mathbf{V}_o}{\mathbf{V}_i} = \frac{j\omega K a_1}{(\omega_0^2 - \omega^2) + j\omega\frac{\omega_0}{Q}}. \tag{1}$$

The parameter ω_0 is the frequency at which the gain (the magnitude of the transfer function of (1)) is at a maximum. At this frequency, the magnitude of the transfer function is

$$|T(j\omega_0)| = \frac{K a_1 Q}{\omega_0}. \tag{2}$$

There are two frequencies ω_1 and ω_2 where the magnitude is less than this maximum by a factor of $1/\sqrt{2}$. These frequencies are given by

$$\omega_1, \omega_2 = \omega_0\sqrt{1 + \frac{1}{4Q^2}} \mp \frac{\omega_0}{2Q}. \tag{3}$$

By convention, these frequencies are regarded as the lower and upper limits of the *passband*, respectively. Because power is related to the square of the voltage, these frequencies correspond to the points where the transmitted power is half the maximum. For this reason, these frequencies are also known as the half-power frequencies. When power has been reduced by a factor of 1/2, the ratio of actual transmitted power to maxmimum possible transmitted power can be expressed in decibels:

$$\begin{aligned}\left(\frac{P_{\text{actual}}}{P_{\text{maximum}}}\right)_{\text{dB}} &= 10\log_{10}\left(\frac{P_{\text{actual}}}{P_{\text{maximum}}}\right)\\ &= 10\log_{10}\frac{1}{2}\\ &= -3.01\text{dB}.\end{aligned}$$

Because this is so close to -3 dB, the half-power frequencies are also known as the -3 dB frequencies or, more simply, the 3 dB frequencies.

The higher the parameter Q, the narrower the range of frequencies which pass successfully through the circuit. This range is known as the bandwidth B and it is given by

$$B = \frac{\omega_0}{Q}. \tag{4}$$

Another property of this transfer function is that

$$\omega_0 = \sqrt{\omega_1\omega_2}. \tag{5}$$

Thus ω_0 is the *geometric* mean of the upper and lower 3 dB frequencies. This is different from the *arithmetic* mean, which is $\omega_0\sqrt{1 + \frac{4}{Q^2}}$, a slightly higher frequency.

A graphical depiction of the transfer function is shown in Figure 2 on the following page. The frequency axis in the figure is shown logarithmically, not linearly: each vertical grid line represents a frequency that is a factor of 10 higher than the previous one.

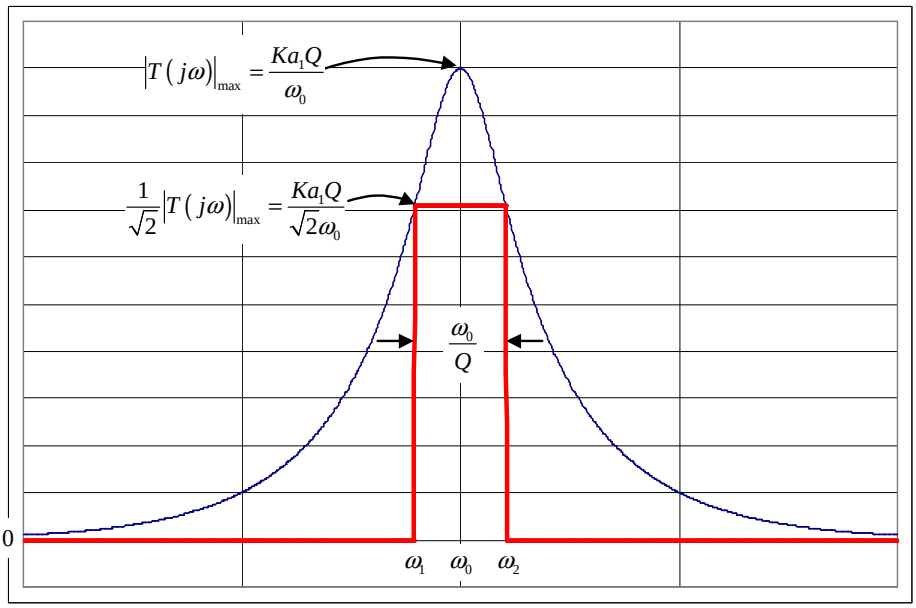

Figure 2: Transfer function of a bandpass filter.

2 Realization of the Bandpass Filter

Figure 1 on page 1 can be used to implement a bandpass filter by using the following design equations: [1]

$$a_1 = \frac{1}{C_7 R_6} \tag{6}$$

$$\frac{\omega_0}{Q} = \frac{1}{C_7 R_6} \tag{7}$$

$$\omega_0^2 = \frac{R_2}{C_4 C_7 R_1 R_3 R_5}. \tag{8}$$

3 Lab Specification

Your assignment is to implement the bandpass filter of (1) and make measurements of its performance. Design the filter to the following specifications:

- $Q = 20$
- $\omega_0 = 2\pi f_0 = 2\pi(1 \text{ kHz})$
- Maximum gain $|T(j\omega_0)| = 5$

It is probably sensible to choose capacitors first, since they do not come in such a wide assortment of values as resistors do. You may also find it useful to

arbitrarily let certain resistors have the same values. (A common choice is to set $R_1 = R_2 = R_3 = R_5$ and $C_7 = C_4$.)

Make sure that intermediate signals (specifically, the outputs of the op amps) do not need to exceed the voltages of the power supplies. If you use ± 15 V power supplies, keeping the signals to within ± 10 V would satisfy this requirement very easily.

Also make sure that no component will be required to dissipate more power than its maximum rating will permit. Limiting each resistor's dissipation to 125 mW is a good practice. Do not subject a 1 Ω resistor to 10 V, for example.

You may find it helpful to simulate your design before building it. Doing so will help you uncover design mistakes early.

4 Observations

Make quantified observations on the following:

- Bandwidth in hertz
- Center frequency in hertz
- Maximum gain
- Gain over a range of additional frequencies from 50 Hz to 50 kHz.

5 Report

A formal lab report is required for this lab.

- Include the equations above in your report as part of your explanation of what you are trying to accomplish. You may find it convenient to use the Equation Editor of Word to do this. Alternatively, you might consider using the LaTeX system. See

`http://www.usna.edu/Users/ee/cameronc/Miscellaneous/LaTeX/LaTeX.html`

- Include a schematic diagram with *all* component values shown.
- Include a plot showing the gain as a function of frequency.
- Compare the theoretically predicted behavior of your filter with measured performance. Comment on any discrepancies you note.
- Explain *how* you made your measurements and exactly *what* you measured.

References

[1] A. S. Sedra and K. C. Smith, *Microelectronic Circuits*, 4th ed. New York: Oxford University Press, Inc., 1998.