19. (8 pts) Set up two nodal equations for the circuit below. (Bonus credit for calculating the nodal voltages.)

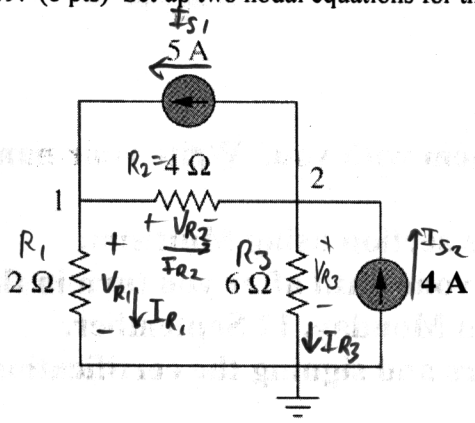

Node 1: $I_{S_1} - I_{R_1} - I_{R_2} = 0$

Node 2 $-I_{S_1} + I_{R_2} - I_{R_3} + I_{S_2} = 0$

① $I_{S_1} - \frac{V_{R1}}{R_1} - \frac{V_{R2}}{R_2} = 0$

② $-I_{S_1} + \frac{V_{R2}}{R_2} - \frac{V_{R3}}{R_3} + I_{S_2} = 0$

① $I_{S_1} - \frac{V_1}{R_1} - \frac{V_1 - V_2}{R_2} = 0$

② $-I_{S_1} + \frac{V_1 - V_2}{R_2} - \frac{V_2}{R_3} + I_{S_2} = 0$

$$\begin{pmatrix} -\frac{1}{R_1} - \frac{1}{R_2} & \frac{1}{R_2} \\ \frac{1}{R_2} & -\frac{1}{R_2} - \frac{1}{R_3} \end{pmatrix} \begin{pmatrix} V_1 \\ V_2 \end{pmatrix} = \begin{pmatrix} -I_{S_1} \\ I_{S_1} - I_{S_2} \end{pmatrix}$$

$$\begin{pmatrix} V_1 \\ V_2 \end{pmatrix} = \begin{pmatrix} -2.33V \\ 2.00V \end{pmatrix}$$

20. (8 pts) Find V_0 in the circuit below.

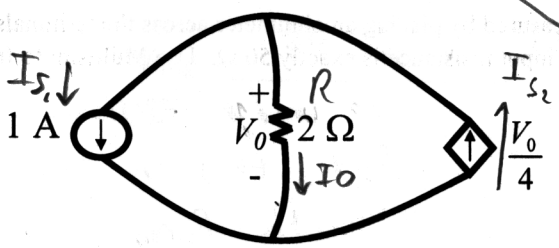

$I_{S_1} + I_0 - I_{S_2} = 0$

$I_{S_1} + \frac{V_0}{R} - \frac{V_0}{4\ V/A} = 0$

$V_0\left(\frac{1}{R} - \frac{1}{4\Omega}\right) = -I_{S_1}$

$V_0 = -4.0\ V$

21. (9 pts) The voltage source E_s is charging a 9 volt battery. (assume steady state)

a. Find the value of E_s so that the 2 Ω resistor is consuming 20 watts.

b. How long does it take for 100 W-hr of energy to be delivered to the battery.

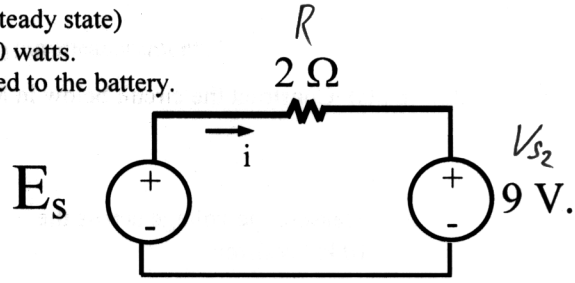

(a) $P_R = i^2 R$

$i = \sqrt{\frac{P_R}{R}} = \sqrt{\frac{20W}{2\Omega}} = 3.17A$

$i = \frac{E_S - V_{S_2}}{R}$

So $E_S = V_{S_2} + iR$

$= 9V + (3.17A)(2\Omega)$

$= 15.32V$

(b) The power to the battery is $P_2 = i V_{S_2} = (3.17A)(9V) = 28.5W$

$W = 100\ W\text{-}hr = P_2 t \Rightarrow t = \frac{W}{P_2} = \frac{100\ W\text{-}hr}{28.5W} = 3.51\ hr$