Problem 9

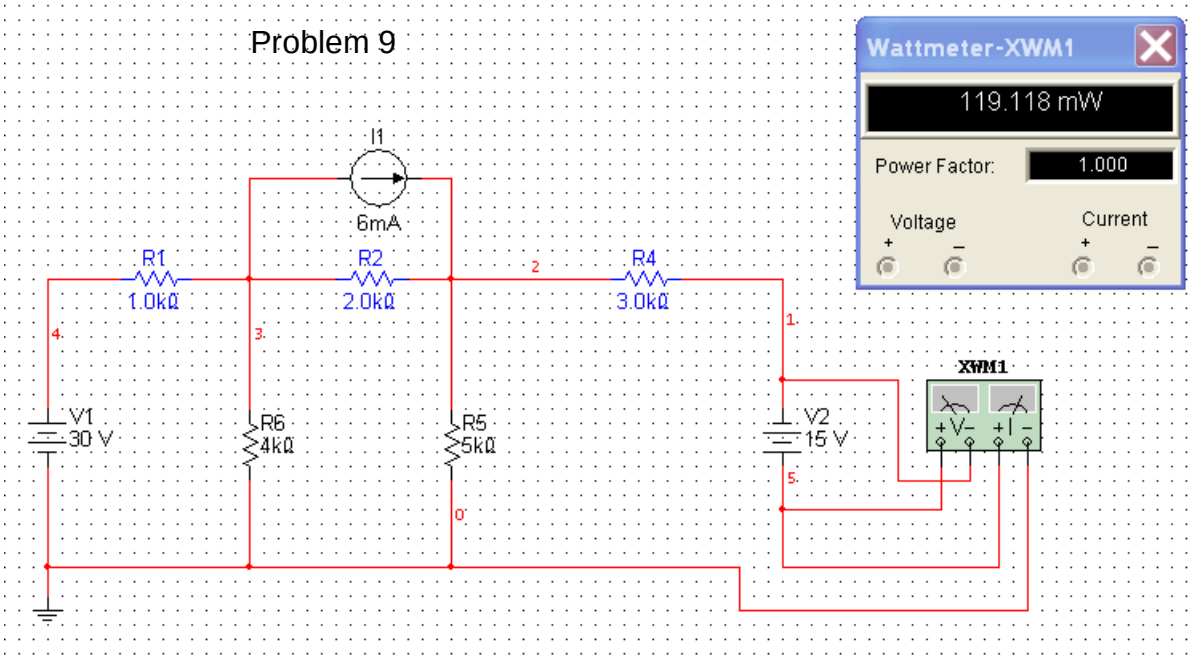
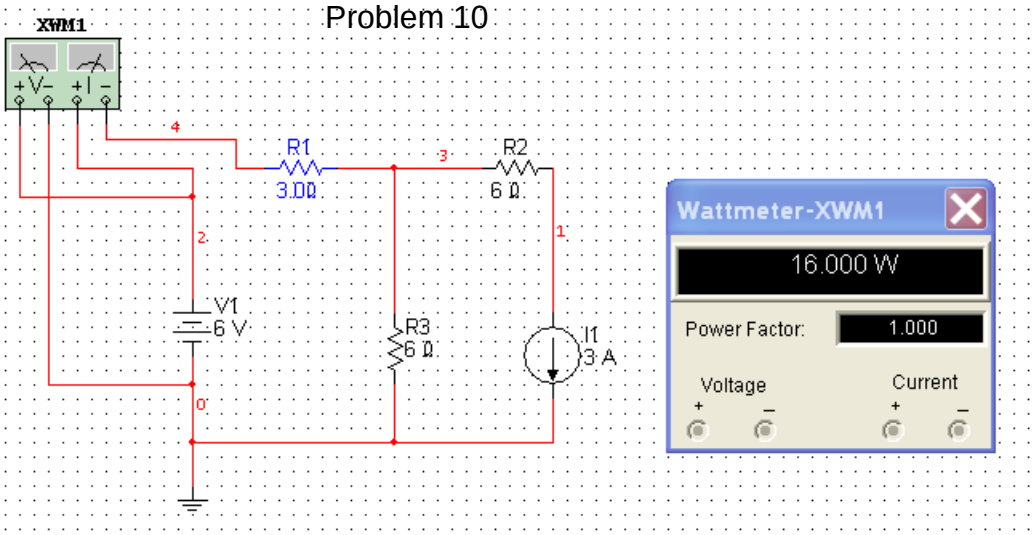
Problem 10