USEFUL OP-AMP CIRCUITS THAT YOU SHOULD HAVE MEMORIZED

VOLTAGE BUFFER

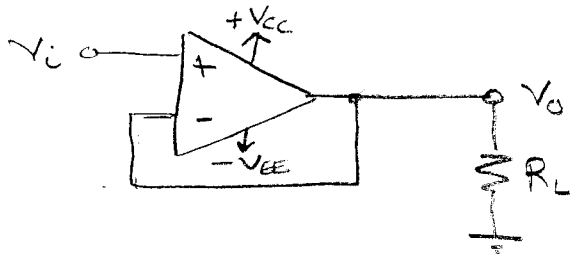

$V_o = V_i$

$R_i = \infty$

$R_o = 0$

INVERTING AMPLIFIER

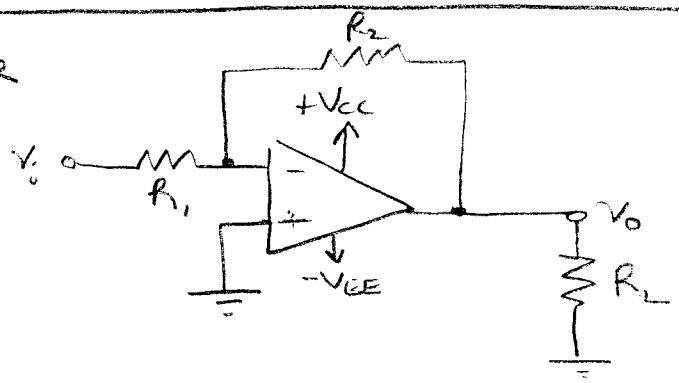

$V_o = -\frac{R_2}{R_1} V_i$

$R_i = R_1$

$R_o = 0$

NON-INVERTING AMPLIFIER

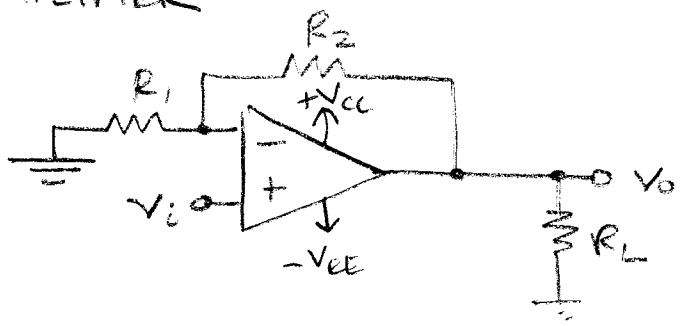

$V_o = \left(1 + \frac{R_2}{R_1}\right) V_i$

$R_i = \infty$

$R_o = 0$

SUMMING AMPLIFIER

R_i for j^{th} input $= R_j$

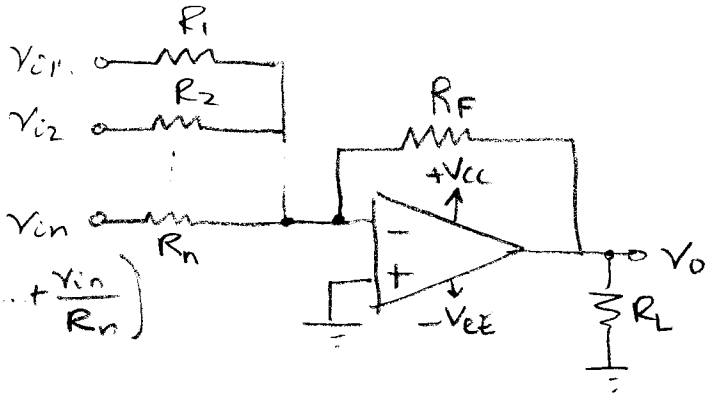

$V_o = -R_F\left(\frac{V_{i1}}{R_1} + \frac{V_{i2}}{R_2} + \dots + \frac{V_{in}}{R_n}\right)$

$R_o = 0$

DIFFERENTIAL AMPLIFIER

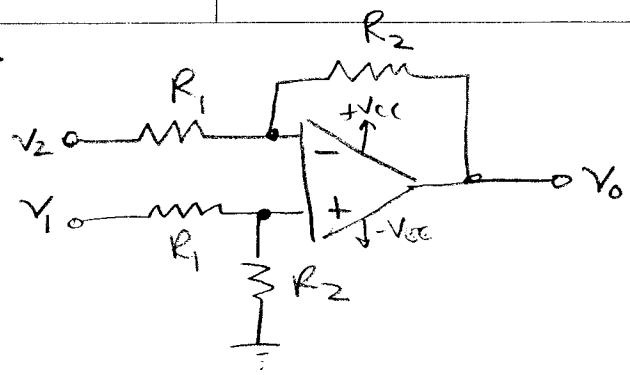

R_i seen at $V_1 = R_1 + R_2$

R_i seen at $V_2 = R_1$

$$V_o = \frac{R_2}{R_1}(V_1 - V_2)$$

$R_o = 0$

INTEGRATOR

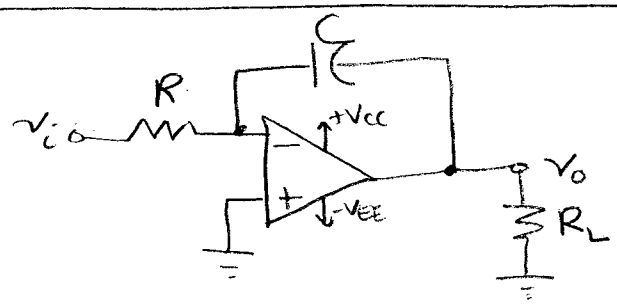

$$V_o(t) = -\frac{1}{RC}\int_0^t V_i(x)\,dx$$

DIFFERENTIATOR

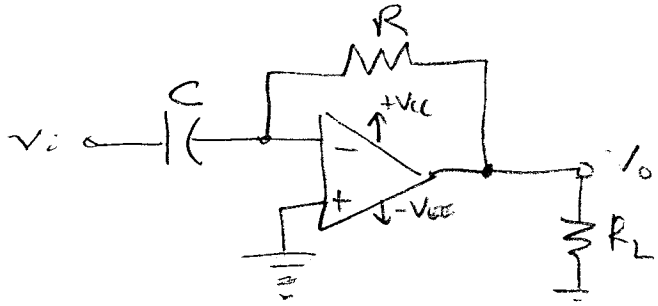

$$V_o = -RC\frac{dV_i}{dt}$$

COMPARATOR

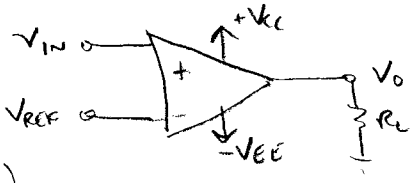

$$V_o = \begin{cases} L^+, & V_{in} > V_{REF} \\ L^-, & V_{in} < V_{REF} \end{cases}$$

$(L^+ \approx V_{cc} - 1,\ L^- \approx -V_{EE} + 1)$
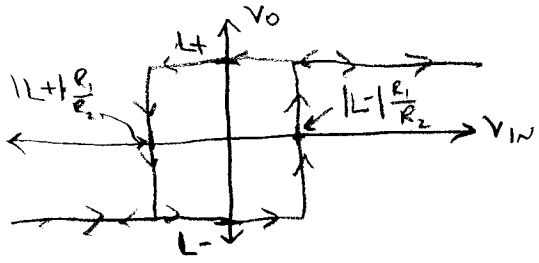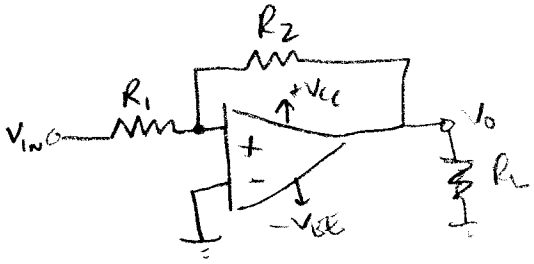
SCHMITT TRIGGER