11.0 ANALOG-TO-DIGITAL CONVERTER (A/D) MODULE

The Analog-to-Digital (A/D) Converter module has five inputs for the 28-pin devices and eight for the other devices.

The analog input charges a sample and hold capacitor. The output of the sample and hold capacitor is the input into the converter. The converter then generates a digital result of this analog level via successive approximation. The A/D conversion of the analog input signal results in a corresponding 10-bit digital number. The A/D module has high and low voltage reference input that is software selectable to some combination of VDD, VSS, RA2 or RA3.

The A/D converter has a unique feature of being able to operate while the device is in SLEEP mode. To operate in sleep, the A/D clock must be derived from the A/D's internal RC oscillator.

The A/D module has four registers. These registers are:

- A/D Result High Register (ADRESH)
- A/D Result Low Register (ADRESL)
- A/D Control Register0 (ADCON0)
- A/D Control Register1 (ADCON1)

The ADCON0 register, shown in Register 11-1, controls the operation of the A/D module. The ADCON1 register, shown in Register 11-2, configures the functions of the port pins. The port pins can be configured as analog inputs (RA3 can also be the voltage reference) or as digital I/O.

Additional information on using the A/D module can be found in the PICmicro™ Mid-Range MCU Family Reference Manual (DS33023).

REGISTER 11-1: ADCON0 REGISTER (ADDRESS: 1Fh)

R/W-0	R/W-0	R/W-0	R/W-0	R/W-0	R/W-0	U-0	R/W-0
ADCS1	ADCS0	CHS2	CHS1	CHS0	GO/$\overline{\text{DONE}}$	—	ADON
bit7							bit0

R = Readable bit
W = Writable bit
U = Unimplemented bit, read as '0'
- n = Value at POR reset

bit 7-6: **ADCS1:ADCS0: A/D Conversion Clock Select bits**
00 = FOSC/2
01 = FOSC/8
10 = FOSC/32
11 = FRC (clock derived from an RC oscillation)

bit 5-3: **CHS2:CHS0**: Analog Channel Select bits
000 = channel 0, (RA0/AN0)
001 = channel 1, (RA1/AN1)
010 = channel 2, (RA2/AN2)
011 = channel 3, (RA3/AN3)
100 = channel 4, (RA5/AN4)
101 = channel 5, (RE0/AN5)(1)
110 = channel 6, (RE1/AN6)(1)
111 = channel 7, (RE2/AN7)(1)

bit 2: **GO/$\overline{\text{DONE}}$:** A/D Conversion Status bit
If ADON = 1
1 = A/D conversion in progress (setting this bit starts the A/D conversion)
0 = A/D conversion not in progress (This bit is automatically cleared by hardware when the A/D conversion is complete)

bit 1: **Unimplemented**: Read as '0'

bit 0: **ADON**: A/D On bit
1 = A/D converter module is operating
0 = A/D converter module is shutoff and consumes no operating current

Note 1: These channels are not available on the 28-pin devices.

REGISTER 11-2: ADCON1 REGISTER (ADDRESS 9Fh)

U-0	U-0	R/W-0	U-0	R/W-0	R/W-0	R/W-0	R/W-0
ADFM	—	—	—	PCFG3	PCFG2	PCFG1	PCFG0
bit7							bit0

R = Readable bit
W = Writable bit
U = Unimplemented bit, read as ‘0’
- n = Value at POR reset

bit 7: **ADFM: A/D Result format select**
1 = Right Justified. 6 most significant bits of ADRESH are read as ‘0’.
0 = Left Justified. 6 least significant bits of ADRESL are read as ‘0’.

bit 6-4: **Unimplemented: Read as ’0’**

bit 3-0: **PCFG3:PCFG0**: A/D Port Configuration Control bits

PCFG3: PCFG0	AN7(1) RE2	AN6(1) RE1	AN5(1) RE0	AN4 RA5	AN3 RA3	AN2 RA2	AN1 RA1	AN0 RA0	VREF+	VREF-	CHAN / Refs(2)
0000	A	A	A	A	A	A	A	A	VDD	VSS	8/0
0001	A	A	A	A	VREF+	A	A	A	RA3	VSS	7/1
0010	D	D	D	A	A	A	A	A	VDD	VSS	5/0
0011	D	D	D	A	VREF+	A	A	A	RA3	VSS	4/1
0100	D	D	D	D	A	D	A	A	VDD	VSS	3/0
0101	D	D	D	D	VREF+	D	A	A	RA3	VSS	2/1
011x	D	D	D	D	D	D	D	D	VDD	VSS	0/0
1000	A	A	A	A	VREF+	VREF-	A	A	RA3	RA2	6/2
1001	D	D	A	A	A	A	A	A	VDD	VSS	6/0
1010	D	D	A	A	VREF+	A	A	A	RA3	VSS	5/1
1011	D	D	A	A	VREF+	VREF-	A	A	RA3	RA2	4/2
1100	D	D	D	A	VREF+	VREF-	A	A	RA3	RA2	3/2
1101	D	D	D	D	VREF+	VREF-	A	A	RA3	RA2	2/2
1110	D	D	D	D	D	D	D	A	VDD	VSS	1/0
1111	D	D	D	D	VREF+	VREF-	D	A	RA3	RA2	1/2

A = Analog input

D = Digital I/O

Note 1: These channels are not available on the 28-pin devices.
2: This column indicates the number of analog channels available as A/D inputs and the numer of analog channels used as voltage reference inputs.

© 1999 Microchip Technology Inc.

The ADRESH:ADRESL registers contain the 10-bit result of the A/D conversion. When the A/D conversion is complete, the result is loaded into this A/D result register pair, the GO/$\overline{\text{DONE}}$ bit (ADCON0<2>) is cleared and the A/D interrupt flag bit ADIF is set. The block diagram of the A/D module is shown in Figure 11-1.

After the A/D module has been configured as desired, the selected channel must be acquired before the conversion is started. The analog input channels must have their corresponding TRIS bits selected as inputs. To determine sample time, see Section 11.1. After this acquisition time has elapsed, the A/D conversion can be started. The following steps should be followed for doing an A/D conversion:

1. Configure the A/D module:
   - Configure analog pins / voltage reference / and digital I/O (ADCON1)
   - Select A/D input channel (ADCON0)
   - Select A/D conversion clock (ADCON0)
   - Turn on A/D module (ADCON0)
2. Configure A/D interrupt (if desired):
   - Clear ADIF bit
   - Set ADIE bit
   - Set GIE bit
3. Wait the required acquisition time.
4. Start conversion:
   - Set GO/$\overline{\text{DONE}}$ bit (ADCON0)
5. Wait for A/D conversion to complete, by either:
   - Polling for the GO/$\overline{\text{DONE}}$ bit to be cleared

   OR

   - Waiting for the A/D interrupt
6. Read A/D Result register pair (ADRESH:ADRESL), clear bit ADIF if required.
7. For next conversion, go to step 1 or step 2 as required. The A/D conversion time per bit is defined as T_{AD}. A minimum wait of $2T_{AD}$ is required before next acquisition starts.

FIGURE 11-1: A/D BLOCK DIAGRAM

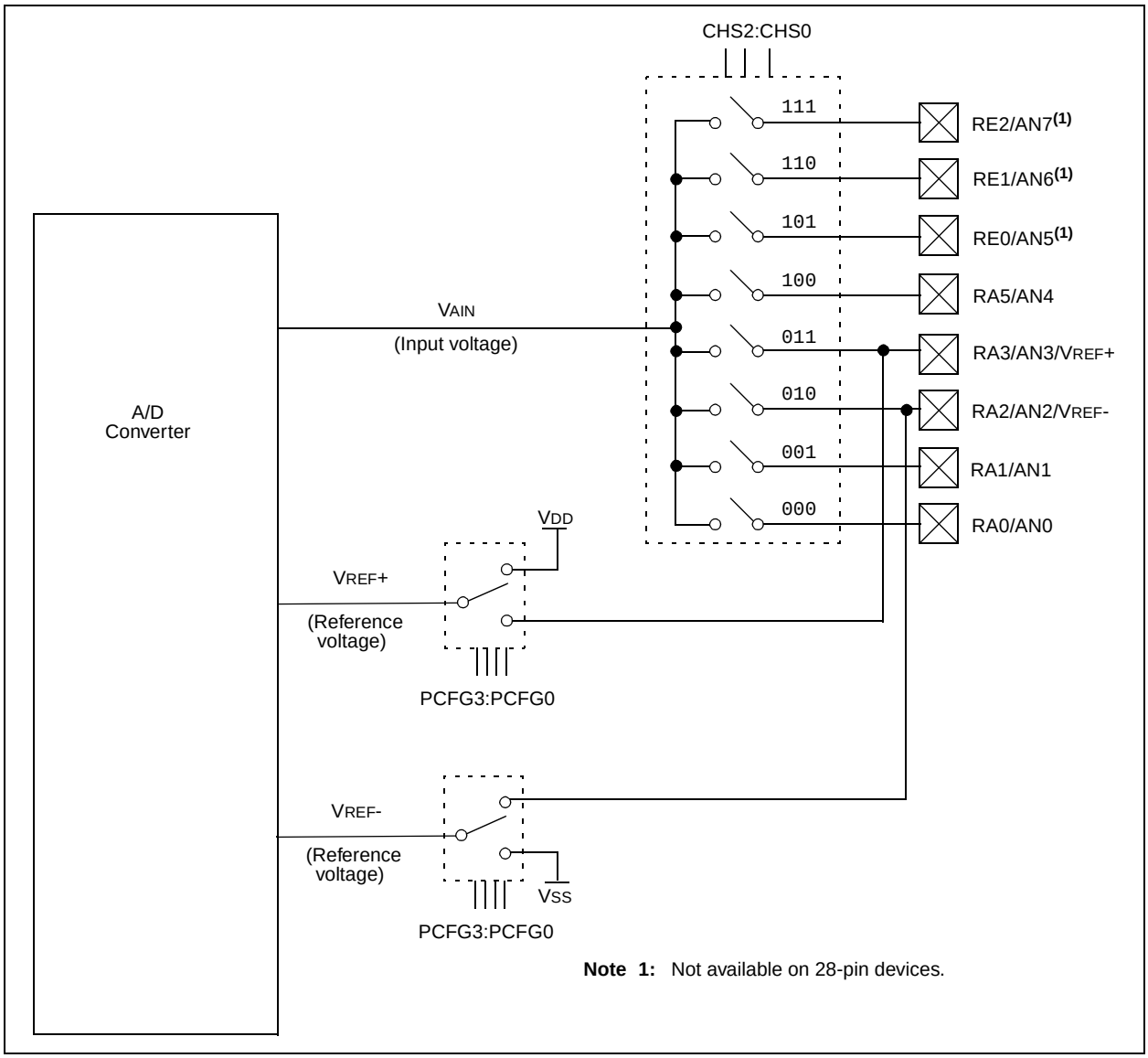

11.1 A/D Acquisition Requirements

For the A/D converter to meet its specified accuracy, the charge holding capacitor (C_{HOLD}) must be allowed to fully charge to the input channel voltage level. The analog input model is shown in Figure 11-2. The source impedance (R_S) and the internal sampling switch (R_{SS}) impedance directly affect the time required to charge the capacitor C_{HOLD}. The sampling switch (R_{SS}) impedance varies over the device voltage (V_{DD}), Figure 11-2. **The maximum recommended impedance for analog sources is 10 kΩ.** As the impedance is decreased, the acquisition time may be decreased. After the analog input channel is selected (changed), this acquisition must be done before the conversion can be started.

To calculate the minimum acquisition time, Equation 11-1 may be used. This equation assumes that 1/2 LSb error is used (1024 steps for the A/D). The 1/2 LSb error is the maximum error allowed for the A/D to meet its specified resolution.

To calculate the minimum acquisition time, T_{ACQ}, see the PICmicro™ Mid-Range Reference Manual (DS33023).

© 1999 Microchip Technology Inc.

EQUATION 11-1: ACQUISITION TIME

T_{ACQ}	=	Amplifier Settling Time + Hold Capacitor Charging Time + Temperature Coefficient
	=	$T_{AMP} + T_C + T_{COFF}$
	=	$2\mu S + T_C + [(\text{Temperature} - 25°C)(0.05\mu S/°C)]$
T_C	=	$C_{HOLD}(R_{IC} + R_{SS} + R_S)\ln(1/2047)$
	=	$-120pF(1k\Omega + 7k\Omega + 10k\Omega)\ln(0.0004885)$
	=	$16.47\mu S$
T_{ACQ}	=	$2\mu S + 16.47\mu S + [(50°C - 25\times C)(0.05\mu S/\times C)]$
	=	$19.72\mu S$

Note 1: The reference voltage (V_{REF}) has no effect on the equation, since it cancels itself out.

2: The charge holding capacitor (C_{HOLD}) is not discharged after each conversion.

3: The maximum recommended impedance for analog sources is 10 kΩ. This is required to meet the pin leakage specification.

4: After a conversion has completed, a $2.0T_{AD}$ delay must complete before acquisition can begin again. During this time, the holding capacitor is not connected to the selected A/D input channel.

FIGURE 11-2: ANALOG INPUT MODEL

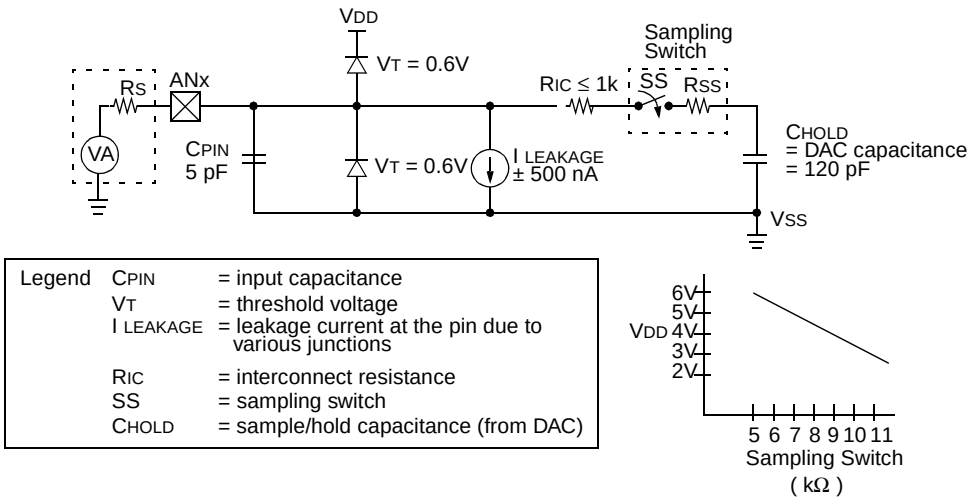

Legend		
	C_{PIN}	= input capacitance
	V_T	= threshold voltage
	$I_{LEAKAGE}$	= leakage current at the pin due to various junctions
	R_{IC}	= interconnect resistance
	SS	= sampling switch
	C_{HOLD}	= sample/hold capacitance (from DAC)

11.2 Selecting the A/D Conversion Clock

The A/D conversion time per bit is defined as TAD. The A/D conversion requires a minimum 12TAD per 10-bit conversion. The source of the A/D conversion clock is software selected. The four possible options for TAD are:

- 2TOSC
- 8TOSC
- 32TOSC
- Internal RC oscillator

For correct A/D conversions, the A/D conversion clock (TAD) must be selected to ensure a minimum TAD time of 1.6 µs.

Table 11-1shows the resultant TAD times derived from the device operating frequencies and the A/D clock source selected.

TABLE 11-1: TAD vs. MAXIMUM DEVICE OPERATING FREQUENCIES (STANDARD DEVICES (C))

AD Clock Source (TAD)		Maximum Device Frequency
Operation	**ADCS1:ADCS0**	**Max.**
2TOSC	00	1.25 MHz
8TOSC	01	5 MHz
32TOSC	10	20 MHz
RC(1, 2, 3)	11	Note 1

Note 1: The RC source has a typical TAD time of 4 µs but can vary between 2-6 µs.
2: When the device frequencies are greater than 1 MHz, the RC A/D conversion clock source is only recommended for sleep operation.
3: For extended voltage devices (LC), please refer to the Electrical Specifications section.

11.3 Configuring Analog Port Pins

The ADCON1, and TRIS registers control the operation of the A/D port pins. The port pins that are desired as analog inputs must have their corresponding TRIS bits set (input). If the TRIS bit is cleared (output), the digital output level (VOH or VOL) will be converted.

The A/D operation is independent of the state of the CHS2:CHS0 bits and the TRIS bits.

Note 1: When reading the port register, any pin configured as an analog input channel will read as cleared (a low level). Pins configured as digital inputs will convert an analog input. Analog levels on a digitally configured input will not affect the conversion accuracy.

2: Analog levels on any pin that is defined as a digital input (including the AN7:AN0 pins), may cause the input buffer to consume current that is out of the device specifications.

© 1999 Microchip Technology Inc.

11.4 A/D Conversions

Clearing the GO/$\overline{\text{DONE}}$ bit during a conversion will abort the current conversion. The A/D result register pair will NOT be updated with the partially completed A/D conversion sample. That is, the ADRESH:ADRESL registers will continue to contain the value of the last completed conversion (or the last value written to the ADRESH:ADRESL registers). After the A/D conversion is aborted, a 2TAD wait is required before the next acquisition is started. After this 2TAD wait, acquisition on the selected channel is automatically started.

In Figure 11-3, after the GO bit is set, the first time segmant has a minimum of TCY and a maximum of TAD.

Note:	The GO/$\overline{\text{DONE}}$ bit should **NOT** be set in the same instruction that turns on the A/D.

FIGURE 11-3: A/D CONVERSION TAD CYCLES

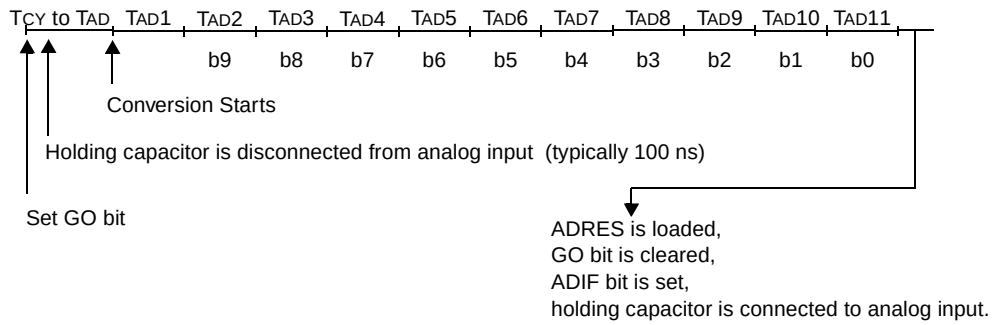

11.4.1 A/D RESULT REGISTERS

The ADRESH:ADRESL register pair is the location where the 10-bit A/D result is loaded at the completion of the A/D conversion. This register pair is 16-bits wide. The A/D module gives the flexibility to left or right justify the 10-bit result in the 16-bit result register. The A/D Format Select bit (ADFM) controls this justification. Figure 11-4 shows the operation of the A/D result justification. The extra bits are loaded with '0's'. When an A/D result will not overwrite these locations (A/D disable), these registers may be used as two general purpose 8-bit registers.

11.5 A/D Operation During Sleep

The A/D module can operate during SLEEP mode. This requires that the A/D clock source be set to RC (ADCS1:ADCS0 = 11). When the RC clock source is selected, the A/D module waits one instruction cycle before starting the conversion. This allows the SLEEP instruction to be executed, which eliminates all digital switching noise from the conversion. When the conversion is completed the GO/$\overline{\text{DONE}}$ bit will be cleared and the result loaded into the ADRES register. If the A/D interrupt is enabled, the device will wake-up from SLEEP. If the A/D interrupt is not enabled, the A/D module will then be turned off, although the ADON bit will remain set.

When the A/D clock source is another clock option (not RC), a SLEEP instruction will cause the present conversion to be aborted and the A/D module to be turned off, though the ADON bit will remain set.

Turning off the A/D places the A/D module in its lowest current consumption state.

Note:	For the A/D module to operate in SLEEP, the A/D clock source must be set to RC (ADCS1:ADCS0 = 11). To allow the conversion to occur during SLEEP, ensure the SLEEP instruction immediately follows the instruction that sets the GO/$\overline{\text{DONE}}$ bit.

11.6 Effects of a Reset

A device reset forces all registers to their reset state. This forces the A/D module to be turned off, and any conversion is aborted.

The value that is in the ADRESH:ADRESL registers is not modified for a Power-on Reset. The ADRESH:ADRESL registers will contain unknown data after a Power-on Reset.

FIGURE 11-4: A/D RESULT JUSTIFICATION

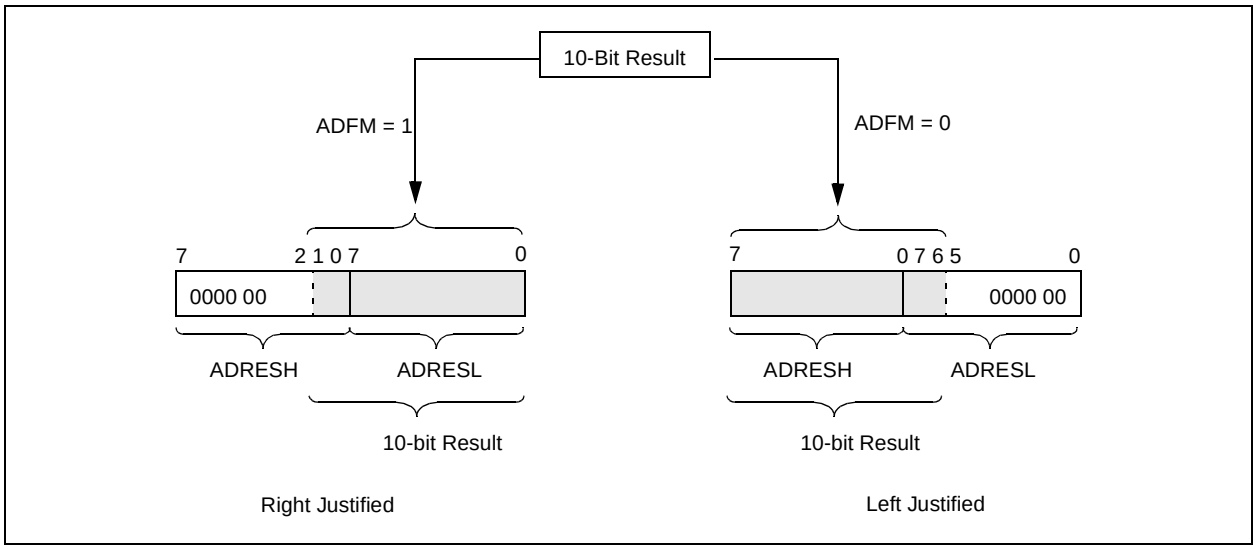

© 1999 Microchip Technology Inc.

TABLE 11-2: REGISTERS/BITS ASSOCIATED WITH A/D

Addr	Name	Bit 7	Bit 6	Bit 5	Bit 4	Bit 3	Bit 2	Bit 1	Bit 0	POR, BOR	$\overline{\text{MCLR}}$, WDT
0Bh	INTCON	GIE	PEIE	T0IE	INTE	RBIE	T0IF	INTF	RBIF	0000 000x	0000 000u
0Ch	PIR1	PSPIF(1)	ADIF	RCIF	TXIF	SSPIF	CCP1IF	TMR2IF	TMR1IF	0000 0000	0000 0000
8Ch	PIE1	PSPIE(1)	ADIE	RCIE	TXIE	SSPIE	CCP1IE	TMR2IE	TMR1IE	0000 0000	0000 0000
1Eh	ADRESH	A/D Result Register High Byte								xxxx xxxx	uuuu uuuu
9Eh	ADRESL	A/D Result Register Low Byte								xxxx xxxx	uuuu uuuu
1Fh	ADCON0	ADCS1	ADCS0	CHS2	CHS1	CHS0	GO/$\overline{\text{DONE}}$	—	ADON	0000 00-0	0000 00-0
9Fh	ADCON1	ADFM	—	—	—	PCFG3	PCFG2	PCFG1	PCFG0	--0- 0000	--0- 0000
85h	TRISA	—	—	PORTA Data Direction Register						--11 1111	--11 1111
05h	PORTA	—	—	PORTA Data Latch when written: PORTA pins when read						--0x 0000	--0u 0000
89h(1)	TRISE	IBF	OBF	IBOV	PSPMODE	—	PORTE Data Direction Bits			0000 -111	0000 -111
09h(1)	PORTE	—	—	—	—	—	RE2	RE1	RE0	---- -xxx	---- -uuu

Legend: x = unknown, u = unchanged, - = unimplemented read as '0'. Shaded cells are not used for A/D conversion.
Note 1: These registers/bits are not available on the 28-pin devices.