3.2 PORTB and the TRISB Register

PORTB is an 8-bit wide, bi-directional port. The corresponding data direction register is TRISB. Setting a TRISB bit (=1) will make the corresponding PORTB pin an input (i.e., put the corresponding output driver in a hi-impedance mode). Clearing a TRISB bit (=0) will make the corresponding PORTB pin an output (i.e., put the contents of the output latch on the selected pin).

Three pins of PORTB are multiplexed with the Low Voltage Programming function; RB3/PGM, RB6/PGC and RB7/PGD. The alternate functions of these pins are described in the Special Features Section.

Each of the PORTB pins has a weak internal pull-up. A single control bit can turn on all the pull-ups. This is performed by clearing bit $\overline{\text{RBPU}}$ (OPTION_REG<7>). The weak pull-up is automatically turned off when the port pin is configured as an output. The pull-ups are disabled on a Power-on Reset.

FIGURE 3-3: BLOCK DIAGRAM OF RB3:RB0 PINS

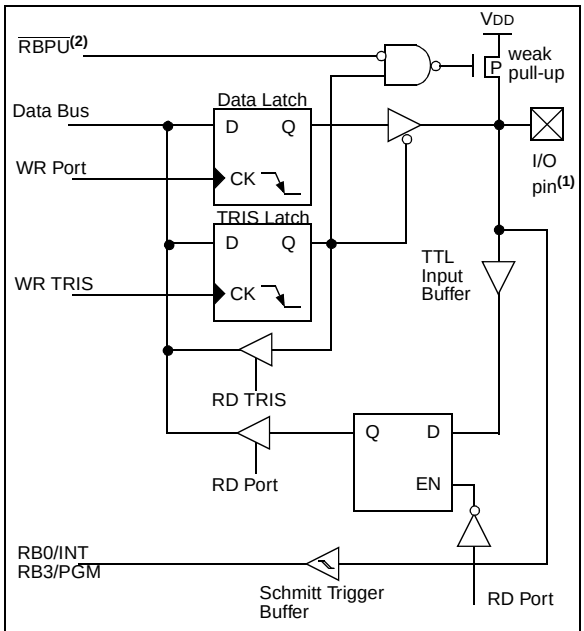

Note 1: I/O pins have diode protection to VDD and VSS.
2: To enable weak pull-ups, set the appropriate TRIS bit(s) and clear the $\overline{\text{RBPU}}$ bit (OPTION_REG<7>).

Four of PORTB's pins, RB7:RB4, have an interrupt on change feature. Only pins configured as inputs can cause this interrupt to occur (i.e. any RB7:RB4 pin configured as an output is excluded from the interrupt on change comparison). The input pins (of RB7:RB4) are compared with the old value latched on the last read of PORTB. The "mismatch" outputs of RB7:RB4 are OR'ed together to generate the RB Port Change Interrupt with flag bit RBIF (INTCON<0>).

This interrupt can wake the device from SLEEP. The user, in the interrupt service routine, can clear the interrupt in the following manner:

a) Any read or write of PORTB. This will end the mismatch condition.
b) Clear flag bit RBIF.

A mismatch condition will continue to set flag bit RBIF. Reading PORTB will end the mismatch condition and allow flag bit RBIF to be cleared.

The interrupt on change feature is recommended for wake-up on key depression operation and operations where PORTB is only used for the interrupt on change feature. Polling of PORTB is not recommended while using the interrupt on change feature.

This interrupt on mismatch feature, together with software configureable pull-ups on these four pins, allow easy interface to a keypad and make it possible for wake-up on key-depression. Refer to the Embedded Control Handbook, *"Implementing Wake-Up on Key Stroke"* (AN552).

RB0/INT is an external interrupt input pin and is configured using the INTEDG bit (OPTION_REG<6>).

RB0/INT is discussed in detail in Section 12.10.1.

FIGURE 3-4: BLOCK DIAGRAM OF RB7:RB4 PINS

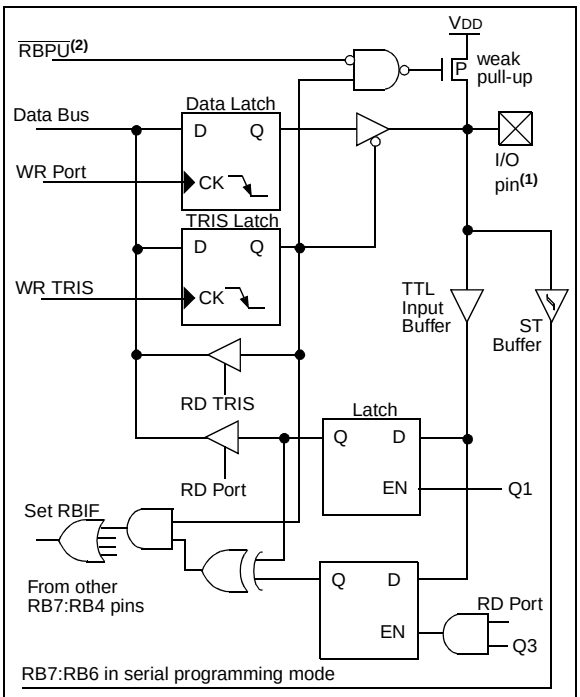

Note 1: I/O pins have diode protection to VDD and VSS.
2: To enable weak pull-ups, set the appropriate TRIS bit(s) and clear the $\overline{\text{RBPU}}$ bit (OPTION_REG<7>).

Note: When using Low Voltage ICSP Programming (LVP) and the pull-ups on PORTB are enabled, bit 3 in the TRISB register must be cleared to disable the pull-up on RB3 and ensure the proper operation of the device.