How to select a fuse in a circuit

The following circuit requires fuse protection. We want to choose resistor R_1 to ensure that under normal operation the current does not exceed a safe limit. Then the fuse will not normally be near the current which would cause it to blow. It will only come into play if something goes gravely wrong and the normal current is exceeded by a large margin.

Resistor R_2 is a 10 Ω resistor and is capable of dissipating 500 mW. The specification calls for a 100% safety margin in the current through R_1.

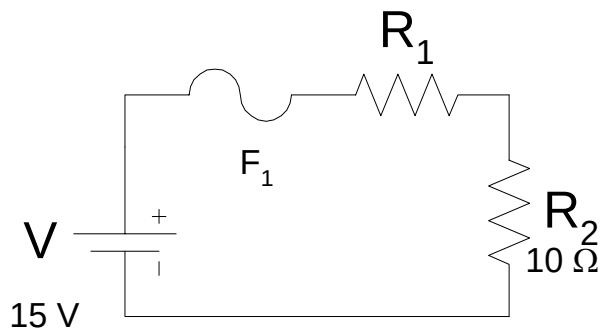

Solution

1. The first step is to use the VIP convention to label all unknown quantities.

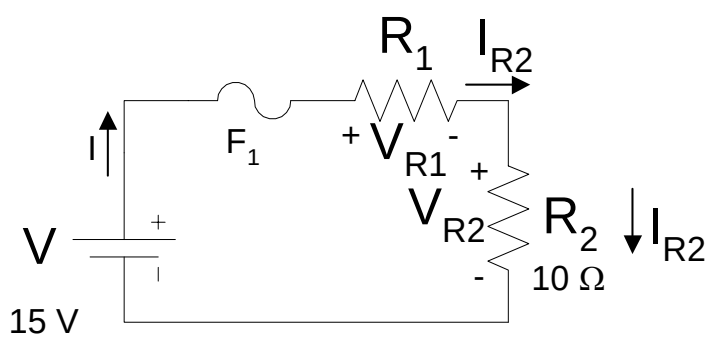

2. Next, figure out the maximum tolerable current. This is based on the maximum tolerable power. The only given limitation is that the power dissipated by resistor 2 not exceed 500 mW. How much current would generate that much power? Since

$$\begin{aligned} P_{R_2} &= V_{R_2} I_{R_2} \\ &= V_{R_2} I \\ &= (IR_2) I \\ &= I^2 R_2 \end{aligned}$$

we can compute the maximum permissible current as

$$\begin{aligned} I_{\max}^2 &= \frac{P_{R_2,\max}}{R_2} \\ &= \frac{(500\text{ mW})}{10\ \Omega} \\ &= 50\text{ mW}/\Omega \\ \mathrm{I}_{\max} &= \sqrt{50\text{ mW}/\Omega} = 224\text{ mA} \end{aligned}$$

For a 100% safety margin, we want half this current or $I = 112$ mA. (The choice of 100% is somewhat arbitrary; other numbers would do more or less well. Also, the decision to apply the safety margin to the current rather than to the power is arbitrary. In this case, though, the specification made 100% a hard requirement.)

Now that we know the total voltage and the total current we can compute the total resistance needed to ensure that this maximum current is not normally exceeded.

$$\begin{aligned} R_T &= \frac{V}{I} \\ &= \frac{15\text{ V}}{112\text{ mA}} \\ &= 134\ \Omega \end{aligned}$$

So

$$R_T = 134\ \Omega = R_1 + R_2 = R_1 + 10\ \Omega$$

$$\begin{aligned} \text{Therefore } R_1 &= 134\ \Omega - 10\ \Omega \\ &= 124\ \Omega \end{aligned}$$

If we use 5% accuracy resistors, we would like the value of R_1 never to be less than this computed value in order to guarantee the current never rise above the 112 mA we have

$$R_{nominal}(1-0.05) = R_{nominal}(0.95) = 124\ \Omega$$
$$R_{nominal} = 130.5\ \Omega$$

decided is permissible. That is, we want a nominal resistor
The next highest standard value of 5% resistors is 150 Ω, giving us slightly more than the 100% safety margin we sought.

How big should our fuse be? It can be close to the actual limit of current, namely 240 mA since we'll normally operate well below this. For example, a fuse able to handle 200 mA to 220 mA would be a reasonable choice. It should be well above the operating current we've chosen, namely 120 mA, so that it won't blow when it doesn't need to.

In summary, this problem entailed figuring out the maximum current permissible, cutting that by a comfortable margin, computing the resistance necessary to achieve it, selecting a real-world resistor R_1 to achieve this value, and then selecting a fuse to blow somewhere between the operating level of current and the dangerous level of current.