©2004 IEEE. Personal use of this material is permitted. However, permission to reprint/republish this material for advertising or promotional purposes or for creating new collective works for resale or redistribution to servers or lists, or to reuse any copyrighted component of this work in other works must be obtained from the IEEE.

An Elliptic Filter Design for the Space Shuttle Vibro-acoustic Experiment

Charles B. Cameron and Sherif Michael
Department of Electrical and Computer Engineering
Naval Postgraduate School
Monterey, CA 93943

ABSTRACT

NASA's Get Away Special (GAS) program permits experimenters to place small, self-contained, autonomously controlled experiments in the Space Shuttle's cargo bay [Ref. 1]. In some experiments the need exists to start recording data just before launch without intervention by the astronauts. This paper describes an elliptic filter whose purpose is to detect the impending launch by listening for a 600 Hz tone characteristic of the Auxiliary Power Units (APU). These are activated between five and ten minutes prior to launch. The filter comprises the key element in an APU detection circuit, and it is implemented using a pair of Generalized Impededance Converters (GIC) in cascade. The GIC configuration is highly insensitive to changes in both its passive and its active parameters, is capable of implementing a large variety of biquadratic filter functions, and so is an excellent choice for active filters. The two GIC sections represent biquadratic factors which individually implement a high-pass and a low-pass notch filter. When placed in cascade, the result is a very narrow band elliptic filter. This paper includes measurements of the sensitivity of the filter to changes in its parameters.

INTRODUCTION

During the intense vibrations associated with the launch of the space shuttle, minor breakage of crystals and other electronic circuitry in the shuttle's pay loads frequently occurs [Ref. 2: p. 11 and Ref. 3]. An experiment at the Naval Postgraduate School is being prepared to record the acoustic signature of the shuttle's cargo bay at the time of launch. Subsequent analysis of this data will permit placement of delicate cargo in regions less prone to such damage. Because the experiment will be housed in a Get Away Special (GAS) canister, it must operate autonomously, and so its controller must anticipate launch. This can be done by detecting the presence of a 600 Hz tone which is characteristic of the space shuttle's Auxiliary Power Unit (APU). The APU always begins to operate within five to ten minutes before launch, so the presence of this tone is a very reliable indication that launch is imminent. [Ref. 4: p. 4]

This paper describes an electronic filter whose purpose is to detect this 600 Hz tone. The filter is at the heart of a circuit to detect the activation of the Auxiliary Power Units. It implements an elliptical (Cauer) band-pass transfer function specified originally by Jordan [Ref. 5: pp. 15-18] and illustrated in Figure 1. The elliptical filter permits some ripple in the pass-band so that it can obtain narrow transition skirts. By decomposing the transfer function into its biquadratic factors, a rather simple, cascaded implementation using operational amplifiers is possible.

The Laplace transform (s-domain) transfer function is given by

$$G(s) = \frac{s^4+2.9587\times10^7 s^2+1.8991\times10^{14}}{s^4+2.4351\times10^2 s^3+2.7642\times10^7 s^2+3.3558\times10^9 s+1.8991\times10^{14}} . \quad (1)$$

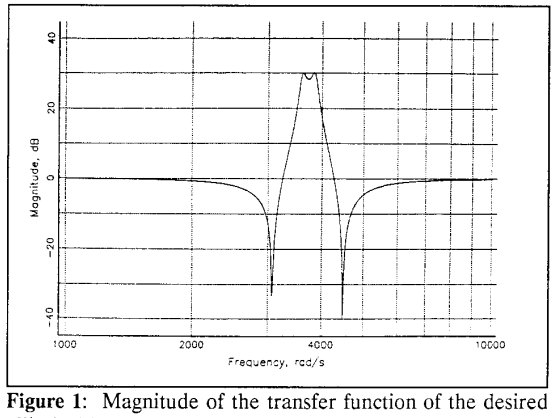

Figure 1: Magnitude of the transfer function of the desired elliptical bandpass filter.

Factoring the polynomials in numerator and denominator yields

$$G(s) = \frac{(s+j4.49\times10^3)(s-j4.49\times10^3)(s+j3.07\times10^3)(s-j3.07\times10^3)}{(s+62+j3.84\times10^3)(s+62-j3.84\times10^3)(s+58.8+j3.59\times10^3)(s+58.8-j3.59\times10^3)} . \quad (2)$$

Multiplying together the factors which are complex conjugates of one another gives

$$G(s) = \left[\frac{s^2+(3.068\times10^3)^2}{s^2+\left(\frac{3.586\times10^3}{30.5}\right)s+(3.586\times10^3)^2}\right]\left[\frac{s^2+(4.491\times10^3)^2}{s^2+\left(\frac{3.843\times10^3}{31.0}\right)s+(3.843\times10^3)^2}\right] . \quad (3)$$

Each of the factors in this expression has been written in the form

$$F(s) = \frac{s^2+\omega_z^2}{s^2+\left(\frac{\omega_p}{Q_p}\right)s+\omega_p^2} . \quad (4)$$

where ω_z is the frequency of the zero in the filter;
ω_p is the frequency of the pole in the filter; and
Q_p is the quality factor of the pole in the filter.

This is the equation of a notch filter, given by Ghausi [Ref. 6: p. 16]. The first factor in Equation (3) represents a high-pass notch filter. By contrast, the second factor in Equation (3) represents a low-pass notch filter.

As suggested by the equation, placing the low-pass notch filter in cascade with the high-pass notch filter produces the desired elliptical band-pass transfer function. The cascade filter

CH2819-1/90/0000-0946$01.00©1991 IEEE

As suggested by the equation, placing the low-pass notch filter in cascade with the high-pass notch filter produces the desired elliptical band-pass transfer function. The cascade filter is very attractive due to its simplicity. The transfer functions of the two notch filters described above and that of the bandpass filter formed by cascading them are shown in Figure 2. These curves all were calculated by computer from the factors in the transfer function given in Equation (3).

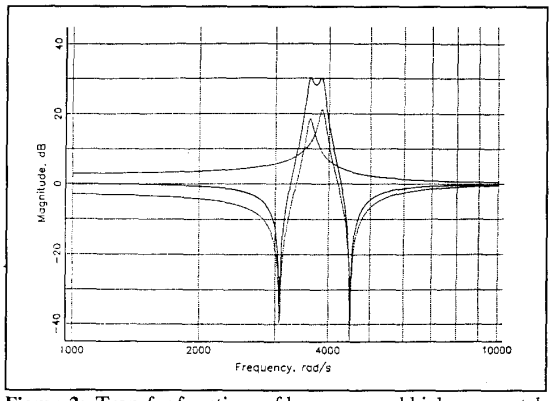

Figure 2: Transfer functions of low-pass, and high-pass notch filters; and of a bandpass filter formed by placing these in cascade.

BIQUADRATIC NOTCH FILTERS USING OPERATIONAL AMPLIFIERS

Figure 3 shows a schematic for a generalized biquadratic filter using two operational amplifiers. The blocks labeled with the letter Y represent admittances. The same topology can be used to realize both notch filters described above. The design equations for these two filter sections are given in Michael [Ref. 7] and derived in Cameron [Ref. 4].

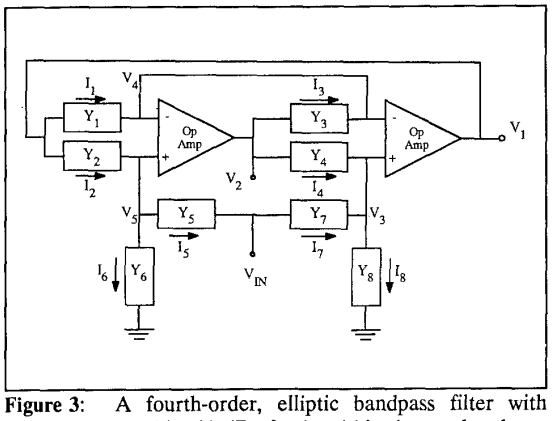

Figure 3: A fourth-order, elliptic bandpass filter with Q = 12. It provides 30 dB of gain within the passband.

For the high-pass notch filter, they are shown in Table 1.

$Y_1=C_a \rightarrow Z_1=\frac{1}{C_a}$	$Y_2=sC_a \rightarrow Z_2=\frac{1}{sC_a}$	$Y_3=C_b \rightarrow Z_3=\frac{1}{C_b}$
$Y_4=Y_5=\frac{1}{R} \rightarrow Z_4=Z_5=R$	$Y_6=0 \rightarrow Z_6=\infty$	$Y_7=sC_b \rightarrow Z_7=\frac{1}{sC_b}$
$Y_8=\frac{1}{Q_pR} \rightarrow Z_8=Q_pR$	$\frac{C_b}{C_a}=Q_p\left[1-\left(\frac{\omega_z}{\omega_p}\right)^2\right]$	$R=\frac{1}{\omega_p C_b}$

Table 1

For the low-pass notch filter, the design equations are shown in Table 2.

$Y_1=Y_5=\frac{1}{R_b} \rightarrow Z_1=Z_5=R_b$	$Y_2=Y_7=sC \rightarrow Z_2=Z_7=\frac{1}{sC}$	$Y_3=Y_4=\frac{1}{R_a} \rightarrow Z_3=Z_4=R_a$
$Y_6=0 \rightarrow Z_6=\infty$	$Y_8=\frac{1}{Q_pR_b} \rightarrow Z_8=Q_pR_b$	$\frac{R_a}{R_b}=Q_p\left[\left(\frac{\omega_z}{\omega_p}\right)^2-1\right]$
	$C=\frac{1}{R_b\omega_p}$	

Table 2

DESIGN

For the high-pass notch filter, $\omega_z = 3.068\times10^3$ rad/s, $\omega_p = 3.586\times10^3$ rad/s, and $Q_p = 30.5$. Hence

$$\frac{C_b}{C_a}=8.176. \tag{5}$$

If we make the arbitrary choice $C_7 = C_b = 1.0\mu$F, then we get $C_2 = C_a = 122.3$nF ≈ 120nF, $R_4 = R_5 = R = 278.9\Omega \approx 280\Omega$, $R_3 = Z_3 = 1$MΩ, $R_1 = Z_1 = 8.177$M$\Omega \approx 8.2$MΩ, and $R_8 = Q_pR = 8.505$k$\Omega \approx 8.45$kΩ. R_6 is left as an open circuit. Note that Z_1 is a resistor whose value (in ohms) is the reciprocal of the value of C_a (in farads). Similarly, Z_3 is a resistor whose value (in ohms) is the reciprocal of the magnitude of C_b (in farads).

For the low-pass notch filter, $\omega_z = 4.491\times10^3$rad/s, $\omega_p = 3.843\times10^3$rad/s, and $Q_p = 31.0$. So

$$\frac{R_a}{R_b} = 11.35. \tag{6}$$

If we arbitrarily pick $R_1 = R_5 = R_b = 1$kΩ, then $R_3 = R_4 = R_a = 11.35$k$\Omega \approx 11.4$kΩ, $C_2 = C_7 = C = 260.2$nF ≈ 260nF, and $R_8 = Q_pR_b = 31.0$k$\Omega \approx 30.9$kΩ. R_6 is left as an open circuit.

Figure 4 shows a schematic of the complete bandpass filter. We have used the LF444 Quad Low Power JFET Input Operational Amplifier.

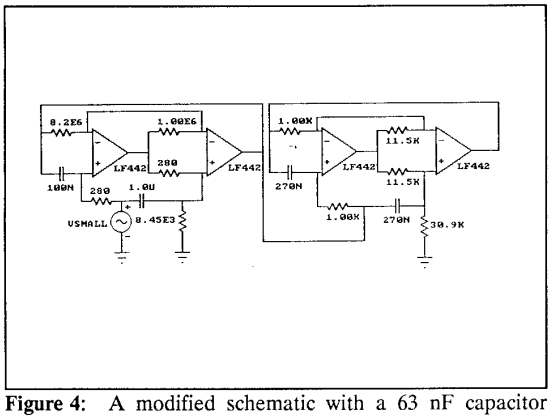

Figure 4: A modified schematic with a 63 nF capacitor bypassing the 8.45kΩ resistor in the high-pass notch filter section. This modification was added in order to eliminate high frequency oscillations in this section of the circuit.

SIMULATION

We simulated the frequency response of this filter using Micro-Cap III [Ref. 8]. In the simulation, we used two LF442 operational amplifier packages instead of a single LF444 operational amplifier package.

Figure 5 is a plot generated by Micro-Cap III from its simulation. By comparing this plot with that in Figure 2 generated from the transfer function, we see that the only departure from the predicted performance is a slight asymmetry in the ripple in the passband. The simulation provided strong evidence that the design would produce a transfer function very similar to that desired. On the strength of this simulation, we proceeded to implement the filter in hardware.

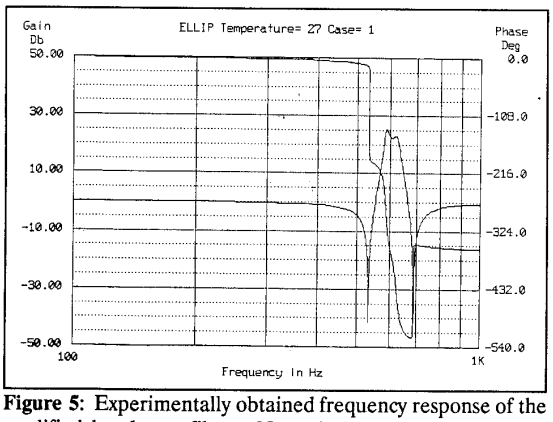

Figure 5: Experimentally obtained frequency response of the modified band-pass filter. Note the loss of the notch just below the pass-band due to the addition of the stabilizing capacitor.

EXPERIMENTAL RESULTS

In implementing the design, we ran into a problem. Our analysis of the behavior of the topology shown in Figure 3 depended on a model of the operational amplifiers which assumed ideal behavior (infinite input impedance, infinite gain, zero output impedance). Micro-Cap III, in contrast, uses a more accurate model of the behavior of operational amplifiers. But neither our model nor Micro-Cap III predicted instability in the high-pass notch filter, which we nonetheless observed. Upon applying a test signal, the high-pass notch filter showed large, unacceptable amplitude oscillations at frequencies from 32 kHz on up. These oscillations appeared not only at the output of the notch filter, which was bad enough, but were also impressed onto the test signal itself. We discovered experimentally that placing a 63 nF bypass capacitor C_B across R_8, the 8.45kΩ resistor in the high-pass notch filter, eliminated the instability (see Figure 6). This was the smallest capacitor which would do this.

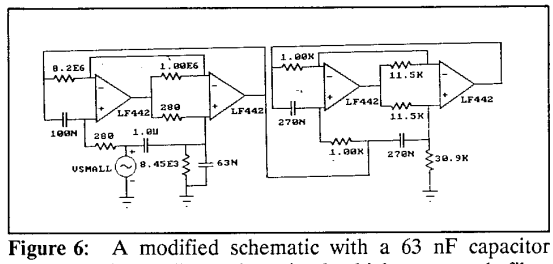

Figure 6: A modified schematic with a 63 nF capacitor bypassing the 8.45kΩ resistor in the high-pass notch filter section. This modification was added in order to eliminate high frequency oscillations in this section of the circuit.

Unfortunately, the deep notch in the transfer function just below the frequency of maximum gain did not appear in the transfer function of the filter circuit. This change can be seen in the plot of the transfer function of the actual filter circuit shown in Figure 7. This plot was produced with a Hewlett Packard HP4184A Impedance-Gain/Phase Analyzer. While the consequence of this modification was a departure from the behavior of an elliptical filter, the resulting filter nonetheless provided 30 dB of amplification in the pass band and had no significant adverse effect on the bandwidth.

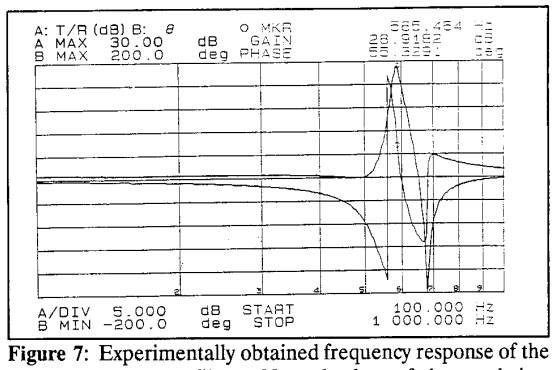

Figure 7: Experimentally obtained frequency response of the modified band-pass filter. Note the loss of the notch just below the pass-band due to the addition of the stabilizing capacitor.

To confirm that the extra capacitor was indeed responsible for the loss of the lower notch, we simulated the modified circuit in Micro-Cap III. Even though Micro-Cap III did not predict instability in our original circuit, it predicted the behavior of the modified circuit very well. This second transfer function generated by Micro-Cap III is shown in Figure 8.

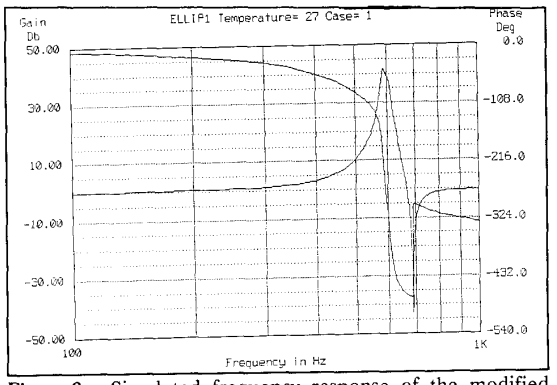

Figure 8: Simulated frequency response of the modified band-pass filter shown in Figure 6, obtained using Micro-Cap III [Ref. 8].

SENSITIVITY

We used Micro-Cap III to calculate the sensitivity of several parameters of the circuit to changes in the values of the passive circuit components. The parameters of performance which were of interest were the frequency of maximum gain, the maximum gain itself, and the bandwidth.

Table 3 shows the results of the simulations. The sensitivity of parameter y due to changes in parameter x is estimated by the formula $S_x^y \approx \frac{\Delta y/y}{\Delta x/x}$. Changes of 1% in values of the indicated passive components were made and the results of the simulations were examined to obtain the data in the table. A sensitivity of z means that a change of 1% in the passive component will create a z% change in the parameter of interest. The meaning of other abbreviations in the table is:

f_p = frequency of peak gain;
G_p = peak gain;
f_{min} = lower frequency at which gain is 3dB down from G_p;
f_{max} = upper frequency at which gain is 3dB down from G_p;
B = $f_{max} - f_{min}$.

We can see from these data that the frequency of peak gain is extremely insensitive to variations in the passive components. This is highly desirable because it implies that variations in the values of the parameters due, for example, to fluctuations in ambient temperature will not cause the center frequency of the filter to wander. Less desirable is the somewhat higher sensitivity of the gain itself. The bandwidth is very sensitive to changes in most of the passive components. The use of 1% precision components therefore is indicated in all components, including the capacitors.

In the circuit we tested, capacitors of 10% precision were used in all cases, and the 8.2MΩ resistor (R_1 in the high-pass notch filter) was of 10% precision. All other resistors were of 1% precision.

	Component x	Value	f_p Hz	G_p dB	f_{min} Hz	f_{max} Hz	Bandwidth B, Hz	$S_x^{f_{max}}$	$S_x^{G_p}$	S_x^B
Baseline			589.3	41.39	582.2	601.7	19.5			
HIGH PASS NOTCH	R_1	8.20MΩ	589.3	42.64	582.4	601.6	19.2	0	3.0	-1.5
	C_2	100nF	589.3	42.53	582.4	601.7	19.3	0	2.8	-1.0
	R_3	1.00MΩ	588.7	40.26	582.0	604.4	22.4	-0.10	-2.7	15
	R_4	280MΩ	589.1	42.63	582.4	601.7	19.3	-0.034	3.0	-1.0
	R_5	280MΩ	589.1	42.53	582.4	601.7	19.3	-0.034	2.8	-1.0
	C_7	1.0μF	589.5	43.36	582.4	600.5	18.1	0.034	4.8	-7.2
	R_8	8.45kΩ	589.3	42.21	582.4	602.3	19.9	0	2.0	2.1
LOW PASS NOTCH	R_1	1.00kΩ	586.2	40.96	579.3	601.0	21.7	-0.53	-1.0	11
	C_2	270nF	586.0	40.98	579.3	600.9	21.6	-0.56	-0.99	11
	R_3	11.5kΩ	592.2	43.52	585.6	603.2	17.6	0.49	5.1	-9.7
	R_4	11.5kΩ	586.0	41.06	579.3	601.0	21.7	-0.56	-0.80	11
	R_5	1.00kΩ	586.0	40.98	579.3	600.9	21.6	-0.56	-0.99	11
	C_7	270nF	586.0	41.07	579.3	600.6	21.3	-0.56	-0.77	9.2
	R_8	30.9kΩ	589.1	42.21	582.4	602.0	19.6	-0.034	2.0	0.51
Bypass Capacitor	C_B	63nF	589.3	42.35	582.4	602.1	19.7	0	2.3	1.0

Table 3

SUMMARY

The Generalized Impedance Converter (GIC) is a convenient, simple circuit for implementing biquadratic filter sections. In this paper, we presented the design equations for high-pass and low-pass notch filters which, when placed in cascade, provided a reasonable approximation to an elliptical band-pass filter. This filter is highly stable in frequency and moderately stable in gain and bandwidth. The use of algebraic analysis and simulation by Micro-Cap III provide a good ability to predict the behavior of the GIC configuration, although susceptibility to oscillations was not evident from either of these tools, as was the case here. The filter which we produced has center frequency, gain, and bandwidth very close to those specified in advance.

REFERENCES

1. *(GAS) Small Self-contained Payloads, Experimenter Handbook*, National Aeronautics and Space Administration, Goddard Space Flight Center, 1987.
2. Wallin, J. W., *Microprocessor Controller with Nonvolatile Memory Implementation*, MSEE Thesis, Naval Postgraduate School, Monterey, CA, December 1985.
3. Kuebler, D. P., *Signal Acquisition and Processing for Autonomous Space Shuttle Cargo Bay Acoustic Measurements*, Defense Technical Information Center (DTIC) Report No. ADA200426, Master's Thesis, Naval Postgraduate School, Monterey, CA, June 1988.
4. Cameron, C. B., *Control of an Experiment to Measure Acoustic Noise in the Space Shuttle*, MSEE Thesis, Naval Postgraduate School, Monterey, CA, June 1989.
5. Jordan, D. W., *A Matched Filter Algorithm for Acoustic Signal Detection*, MSEE Thesis, Naval Postgraduate Monterey, CA, June 1985.
6. Ghausi, M. S., and Laker, K. R., *Modern Filter Design*, Prentice-Hall, Inc., 1981.
7. Michael, S. and Andresakis, P., *Digitally Controlled Programmable Active Filters*, Proceedings of the Nineteenth Annual Asilomar Conference on Circuits, Systems and Computers, Pacific Grove, CA, November 1985, pp. 18-22.
8. *Micro-Cap III Electronic Circuit Analysis Program Instruction Manual*, First Edition, Spectrum Software, 1988.