Exam 2 Review

Linear motor summary

$F = I_A LB$ force exerted on bar due to current I_A

$E_A = BLu$ induced voltage due to velocity of bar u

$I_A = \dfrac{V_A - E_A}{R_A}$ current in the bar

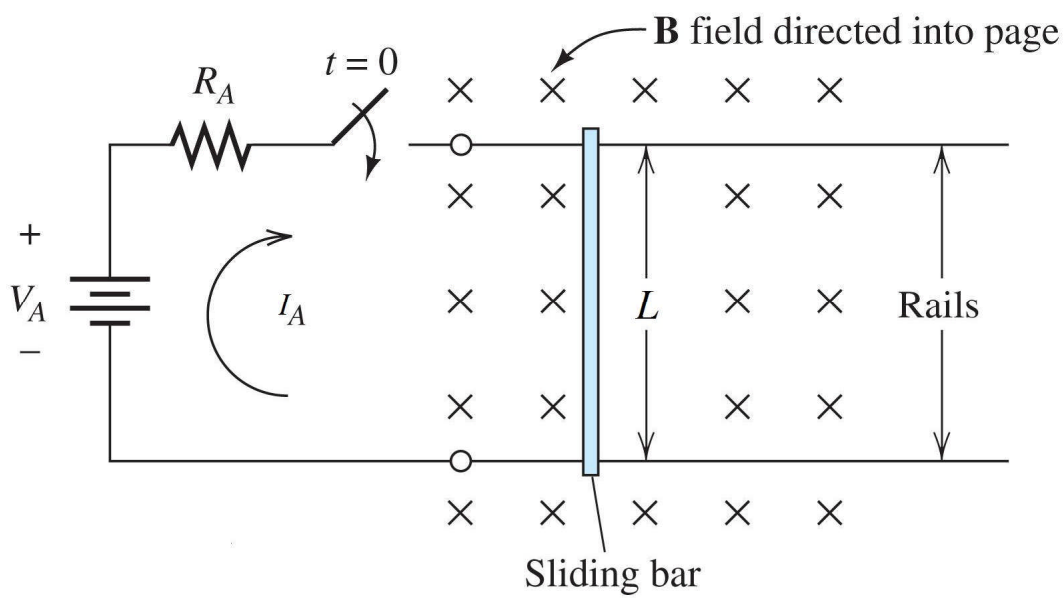

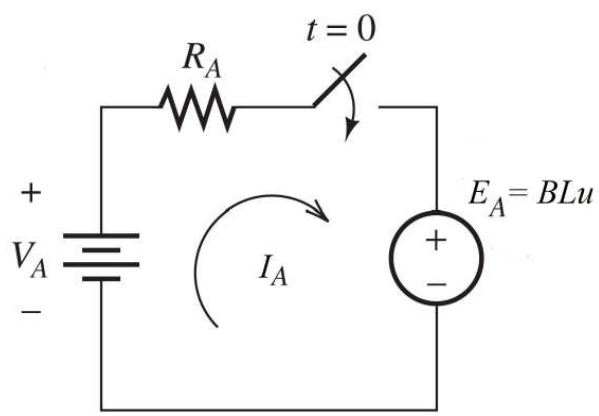

Example Problem 1

Consider a linear machine with $B = 1$ T, $l = 0.2$ m, $V_A = 12$ V and $R_A = 0.05\ \Omega$.

a. Compute I_A and the force exerted on the bar $t = 0$. Also compute steady-state speed (no load).

b. If a load force of 4 N is applied, determine the new speed, the power supplied by V_T, power delivered to the load, power lost to heat and the efficiency.

Rotating dc motor summary

$T_e = K_v I_A$ torque developed due to current I_A

$E_A = K_v \omega_m$ back emf due to rotational velocity ω_m

$I_A = \dfrac{V_T - E_A}{R_A}$ armature current

$T_{Load} = T_e - T_{Loss}$ output torque

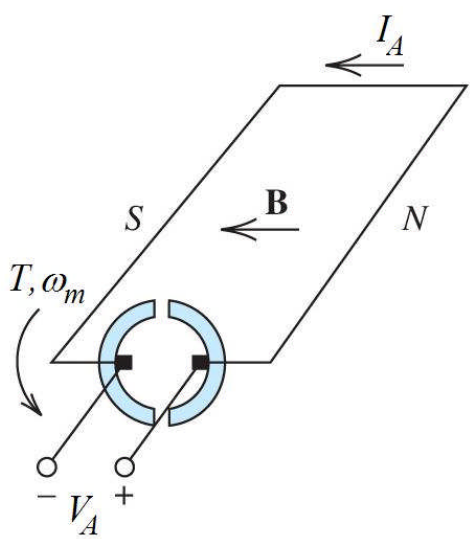

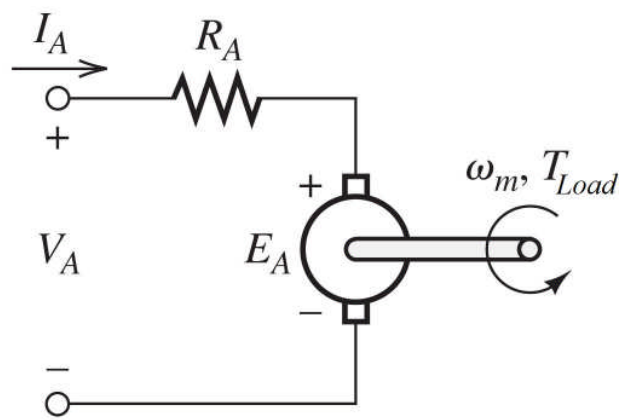

Example Problem 2

A 24V DC motor is operated unloaded where the armature current is 2.3 A and speed is 1800 rpm. The load is increased until the armature current equals 20 A. In this loaded condition, the motor rotates at 1500 rpm. Find R_A and K_v, then determine T_{Loss} and T_{Load}.

Torque-speed characteristic

- Write and expression for T_e in terms of V_A.

$$T_e = K_v I_A$$

$$= K_v \left(\frac{V_A - E_A}{R_A} \right)$$

$$= \frac{K_v V_A}{R_A} - \frac{K_v^2}{R_A} \omega_m$$

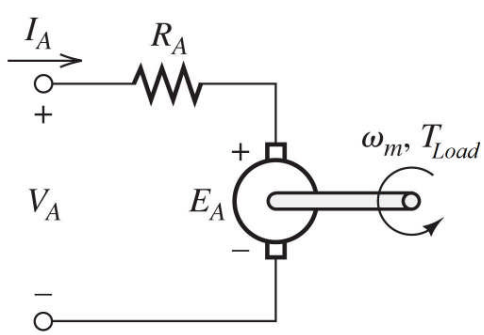

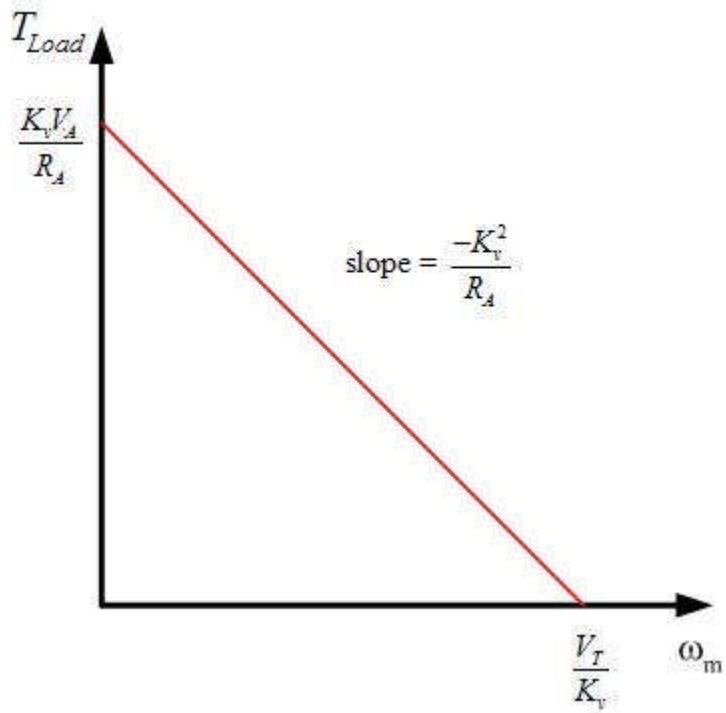

Overlay torque-speed characteristics

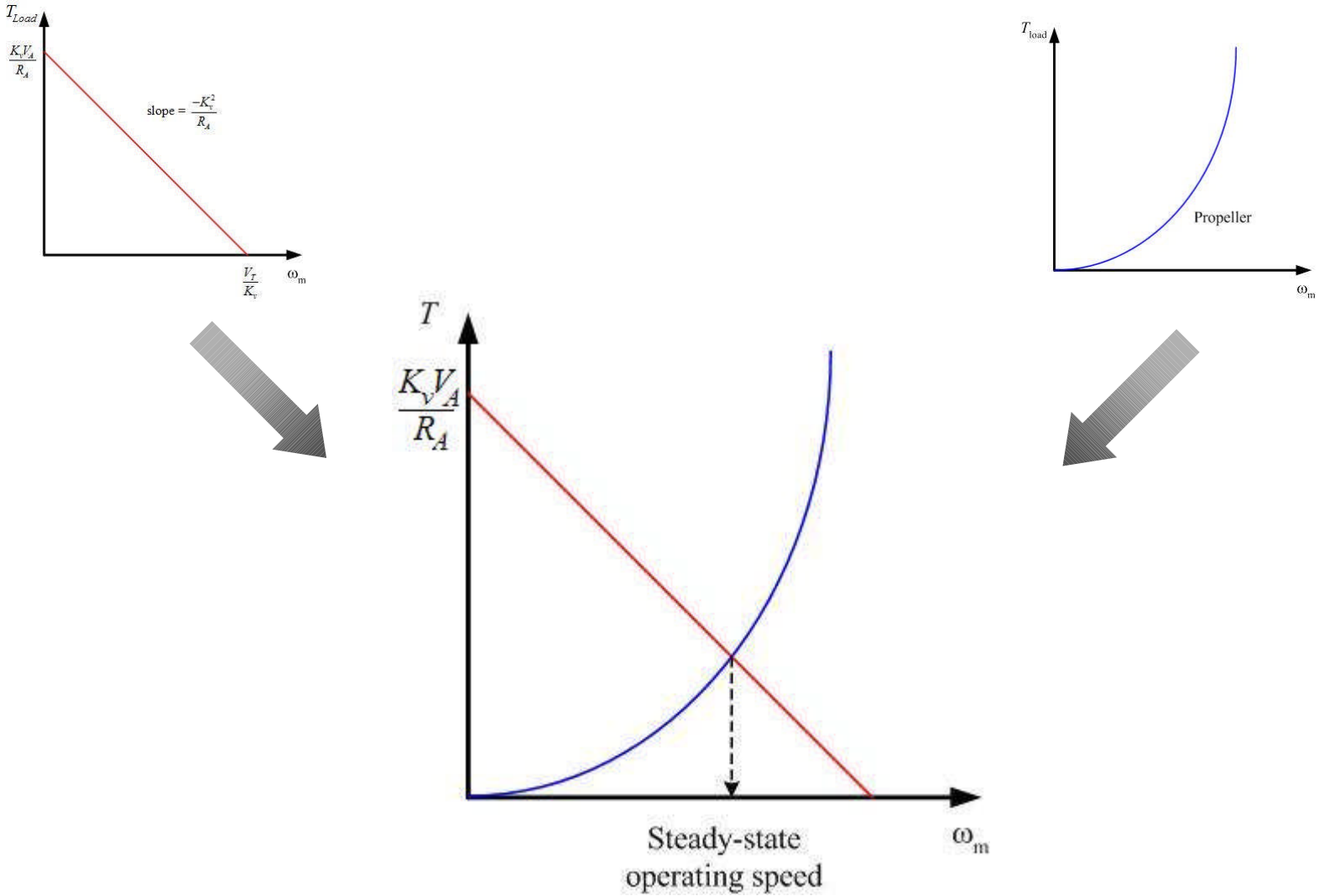

Method of adjusting source voltage

- A more efficient method uses a square wave with an adjustable duty cycle (D).

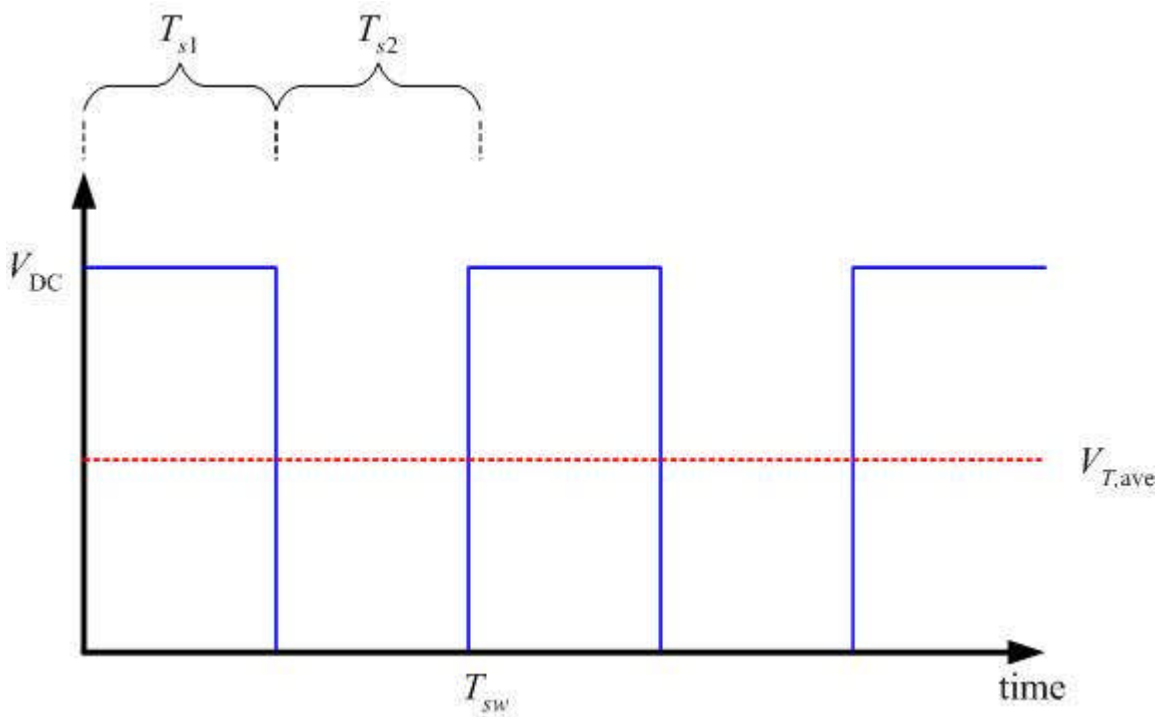

$$D = \frac{T_{s1}}{T_{sw}}$$

$$V_{A,ave} = \frac{T_{s1} V_{DC}}{T_{sw}} = D V_{DC}$$

Example Problem 3

Suppose that we add a speed control circuit that allow us to produce a desired average armature voltage $V_{A,\text{ave}}$. Now suppose we wish to change the speed of the machine in the previous example to operate at 500 rpm with the same T_{load}. What is the required average armature voltage $V_{A,\text{ave}}$? If the DC voltage is 24 V, what is the required duty cycle?

Capacitors

- The charge stored is given $q = Cv$
- The current through a capacitor is given $i = C\dfrac{dv}{dt}$
- The energy stored is $w_c = \dfrac{1}{2}Cv^2$
- A capacitor is an open circuit to dc circuit (upon reaching steady state.
- Capacitors in parallel add like resistors in series.

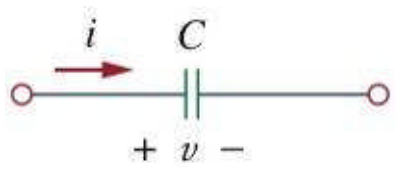

Inductors

- The voltage across an inductor is given $v = L\dfrac{di}{dt}$
- The energy stored is $w_L = \dfrac{1}{2}Li^2$
- An inductor is a short circuit to dc circuit (upon reaching steady state.
- Inductors combine just like resistors.

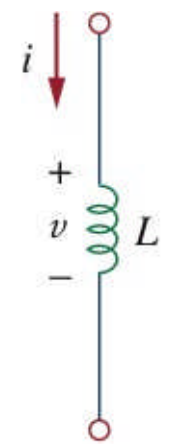

Evaluating RC and RL circuits

1. Determine **initial** capacitor voltage $v(0)$ or inductor current $i(0)$.
2. Determine **final** capacitor voltage $v(\infty)$ or inductor current $i(\infty)$.
3. Find the time constant τ.

(exam 2 formula sheet)

$$v(t) = v(\infty) + [v(0) - v(\infty)]e^{-t/\tau}$$

$$V_C = V_F + [V_I - V_F]e^{-t/\tau}$$

$$i(t) = i(\infty) + [i(0) - i(\infty)]e^{-t/\tau}$$

$$I_C = I_F + [I_I - I_F]e^{-t/\tau}$$

Example Problem 3

Find $i(t)$ for $t > 0$. Assume the switch has been closed for a long time.

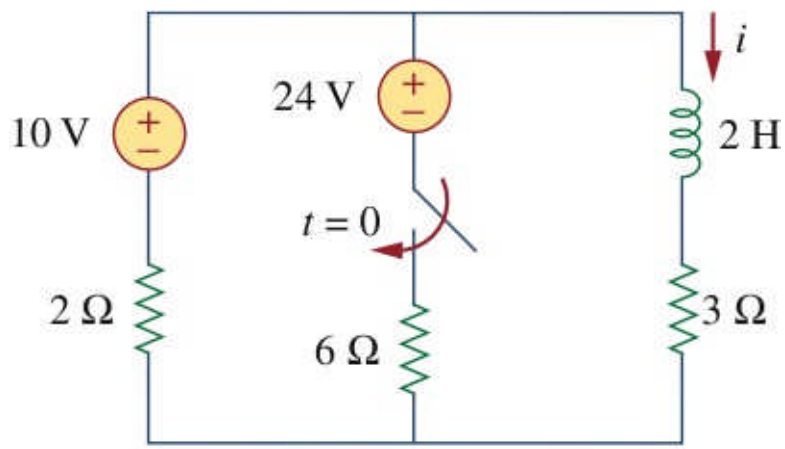

RMS or effective value

- The RMS value of a periodic voltage the dc voltage that delivers the same average power to a resistor.

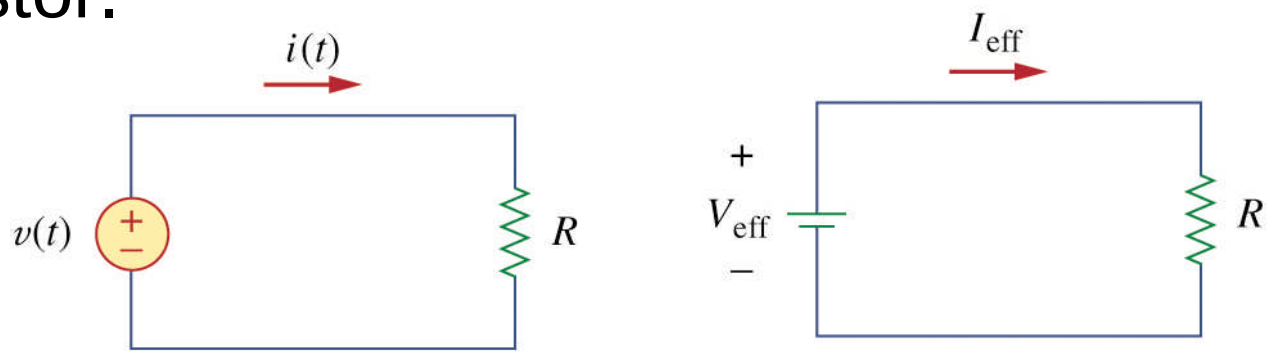

original circuit **dc equivalent**

- The rms value of the sinusoid is $I_{\text{rms}} = \dfrac{I_m}{\sqrt{2}} = 0.707 I_m$

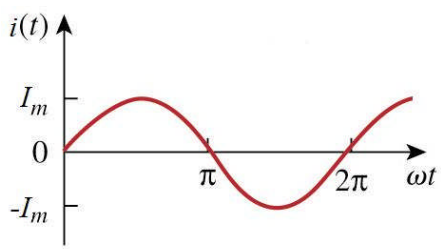

Phasors

- We can represent the sinusoids by a complex number known as a phasor

time domain	**phasor domain**
$v(t) = V_m \cos\left(\omega t + \phi\right)$	$\mathbf{V} = V_m \angle \phi$

- We obtained the voltage-current relations for R, L and C elements.

$$\frac{\mathbf{V}}{\mathbf{I}} = \mathbf{Z}_R = R, \quad \frac{\mathbf{V}}{\mathbf{I}} = \mathbf{Z}_L = j\omega L, \quad \frac{\mathbf{V}}{\mathbf{I}} = \mathbf{Z}_C = \frac{1}{j\omega C}$$

- These complex quantities are known as impedances

Impedances in the complex plane

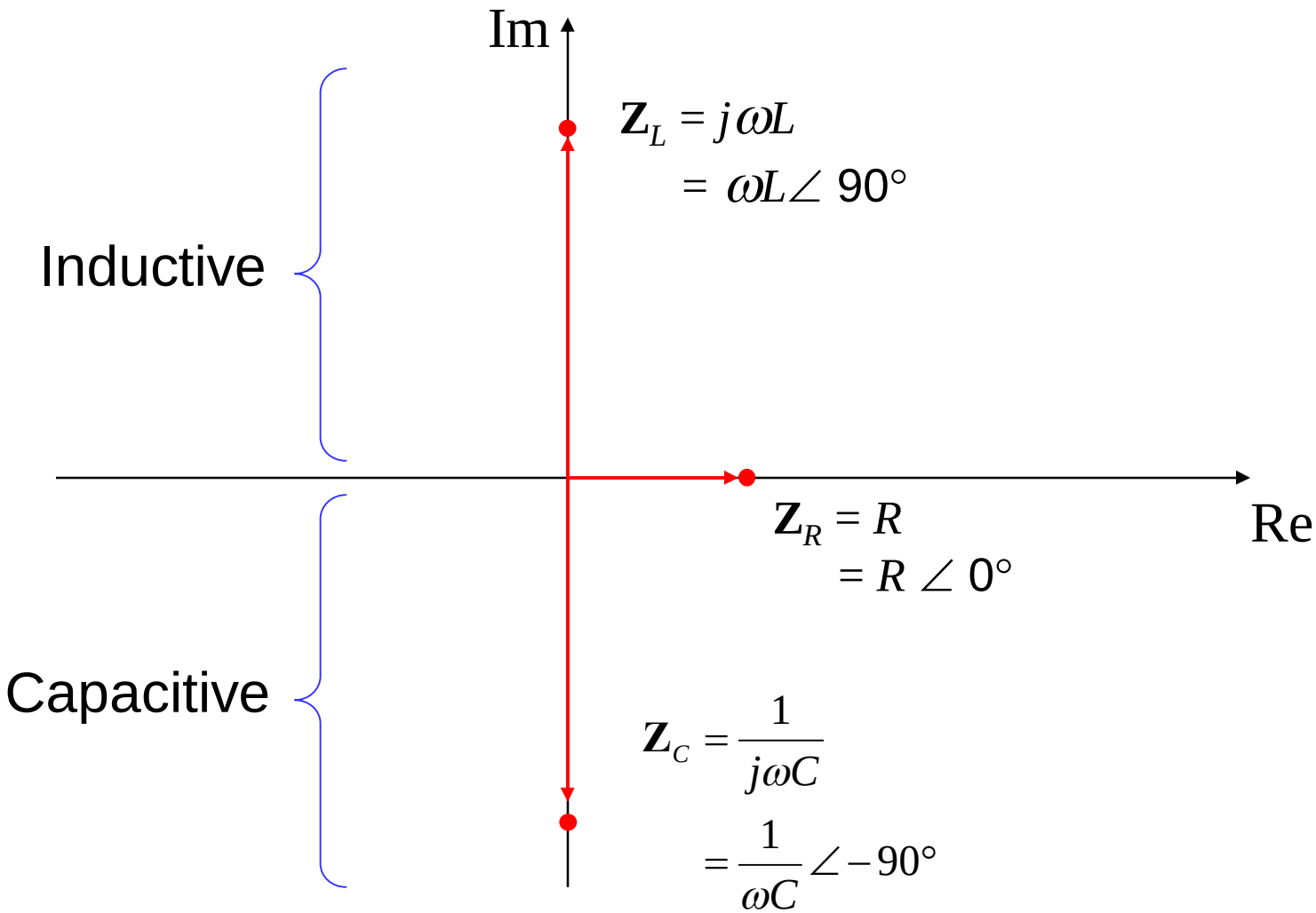

The tools still work with impedance

Ohm's law

Series resistance

Voltage divider rule

Norton's theorem

Nodal analysis

Thévenin's theorem

KVL

Meters

KCL

Parallel resistance

Current divider

Source transformation

Circuit analysis toolbox

Steps in analyzing AC circuits

1. Transform the circuit to the phasor domain.
2. Solve the problem using circuit analysis techniques (nodal, superposition, etc.).
3. Transform the resulting phasor to the time domain.

Example Problem 4

Find the input impedance $\mathbf{Z}_{in}$ if $\omega = 10$ rad/s.

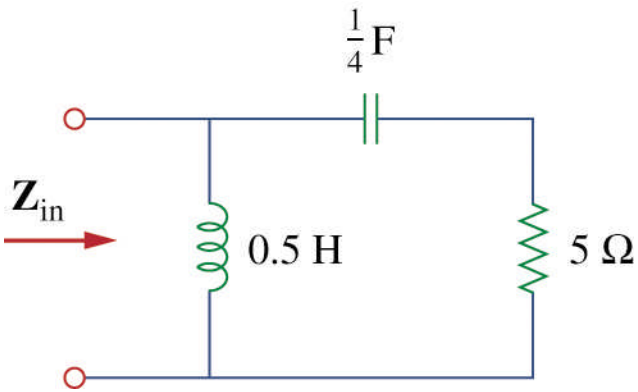

Example Problem 5
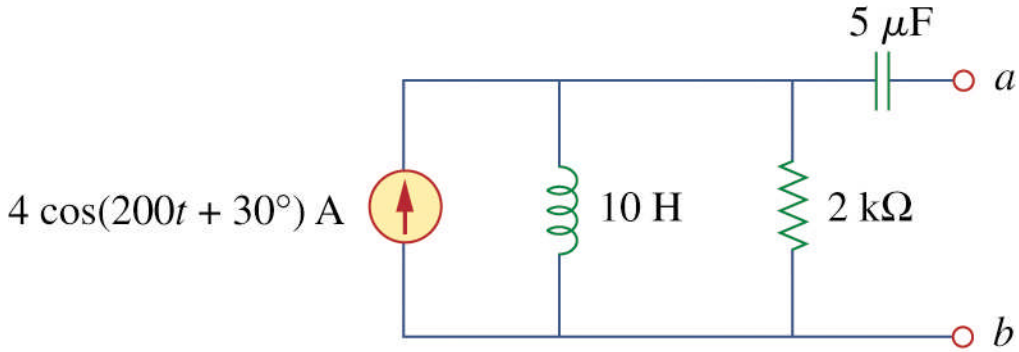
Determine the Thévenin equivalent as seen at terminals a-b.