Exam 3 Review

Exam 3 coverage

- AC power (single phase)
- Transformers
- Three-phase circuit analysis
- Thee-phase power
- Synchronous machines

AC power

- Previously we addressed the question of power delivered to a load impedance $\mathbf{Z}$.

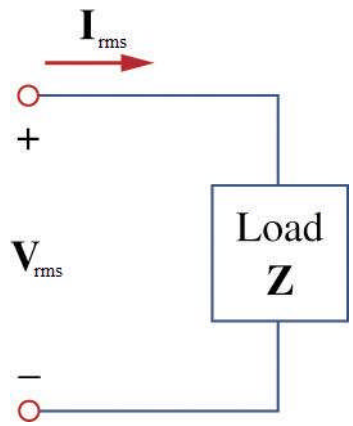

- Given the phasors $\mathbf{V}_{rms}$ and $\mathbf{I}_{rms}$ we found the complex power $\mathbf{S}$ is given

$$\mathbf{S} = \mathbf{V}_{rms}\mathbf{I}_{rms}^{*}$$

Power triangle

The power triangle is proportionally identical to the impedance of the load **Z**.

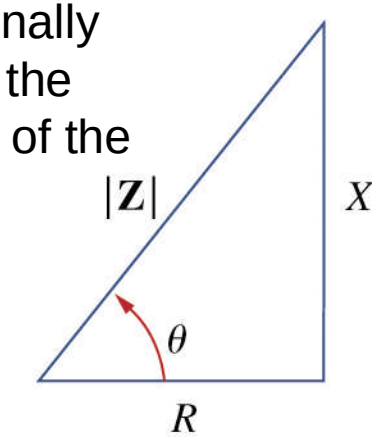

Complex Power

$$\mathbf{S} = P + jQ = \mathbf{V}_{\text{rms}}\mathbf{I}^*_{\text{rms}}$$
$$= I_{\text{rms}}^2\mathbf{Z} = \frac{V_{\text{rms}}^2}{\mathbf{Z}^*}$$

Apparent Power (VA)

$$S = |\mathbf{S}| = V_{\text{rms}}I_{\text{rms}} = \sqrt{P^2 + Q^2}$$

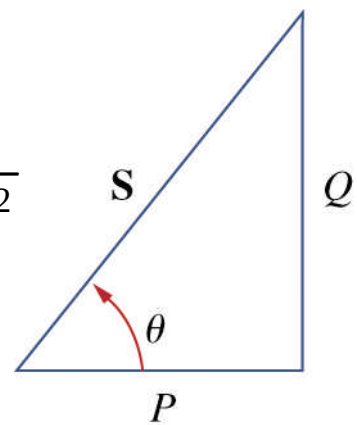

Reactive Power (VAR)

$$Q = \text{Im}(\mathbf{S}) = S\sin\theta = I_{\text{rms}}^2 X$$

Real Power (watts)

$$P = \text{Re}(\mathbf{S}) = S\cos\theta = I_{\text{rms}}^2 R$$

Power factor

$$\text{pf} = \frac{P}{S} = \cos(\theta_v - \theta_i)$$

Conservation of AC power

- The total complex power $\mathbf{S}$ supplied by the source equals the total complex power delivered to the N loads.
- $$\mathbf{S} = \mathbf{V}_{\text{rms}}\mathbf{I}^*_{\text{rms}} = \mathbf{S}_1 + \mathbf{S}_2 + \cdots + \mathbf{S}_N$$
  - This is also true for average power (P) and reactive power (Q), but **not** for apparent power (S).

$$P_{\text{total}} = P_1 + P_2 + \cdots + P_N$$
$$Q_{\text{total}} = Q_1 + Q_2 + \cdots + Q_N$$

Power factor correction

Before correction

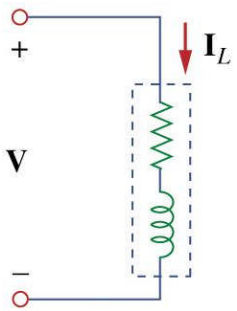

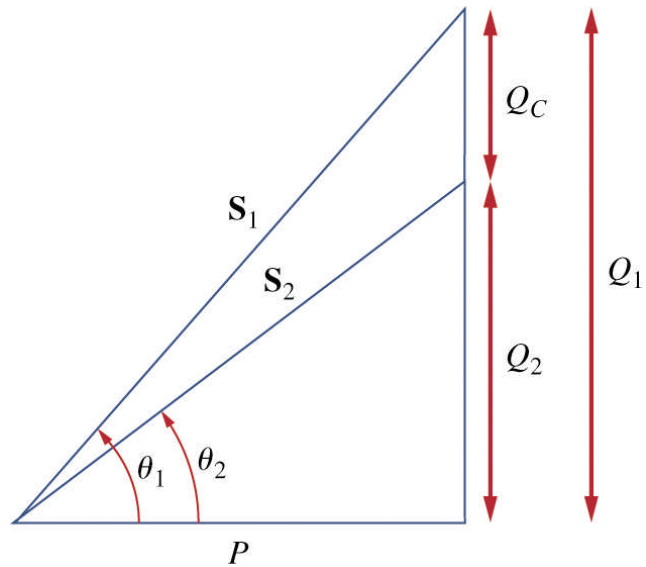

After correction

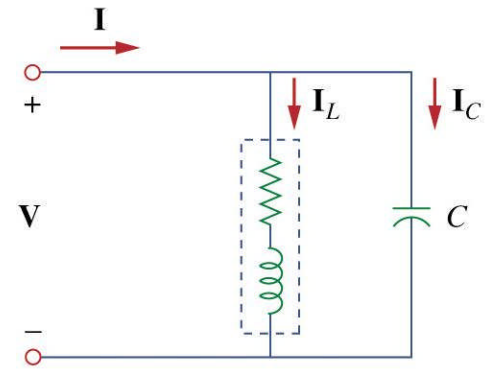

$$P = S_1 \cos\theta_1$$

$$Q_1 = S_1 \sin\theta_1 = P\tan\theta_1$$

$$P = S_2 \cos\theta_2$$

$$Q_2 = S_2 \sin\theta_2 = P\tan\theta_2$$

$$Q_C = Q_1 - Q_2 = P(\tan\theta_1 - \tan\theta_2)$$

Shunt capacitor

- The value of the required shunt capacitance is given by

$$C = \frac{Q_C}{\omega V_{\text{rms}}^2} = \frac{P(\tan\theta_1 - \tan\theta_2)}{\omega V_{\text{rms}}^2}$$

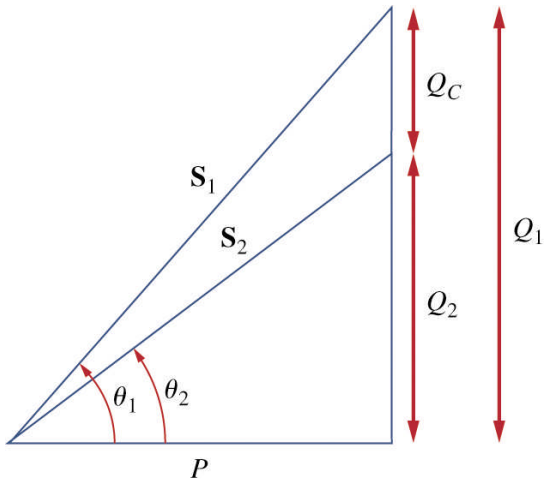

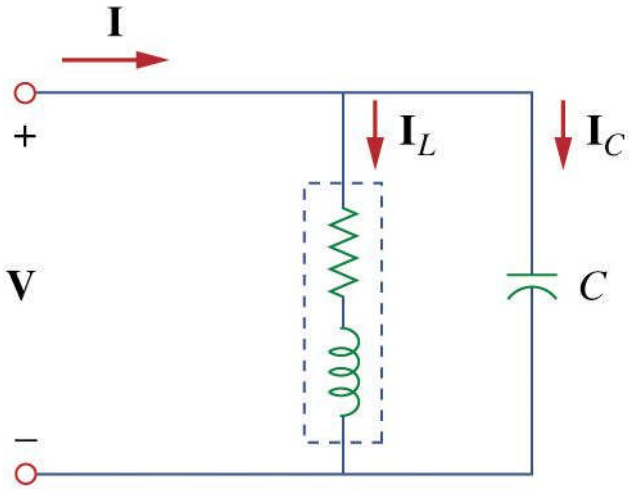

Ideal transformers

$$\frac{N_2}{N_1} = n \qquad \frac{\mathbf{V}_2}{\mathbf{V}_1} = n \qquad \frac{\mathbf{I}_2}{\mathbf{I}_1} = \frac{1}{n}$$

$$\mathbf{Z}_R = \frac{1}{n^2}\mathbf{Z}_\mathrm{L}$$

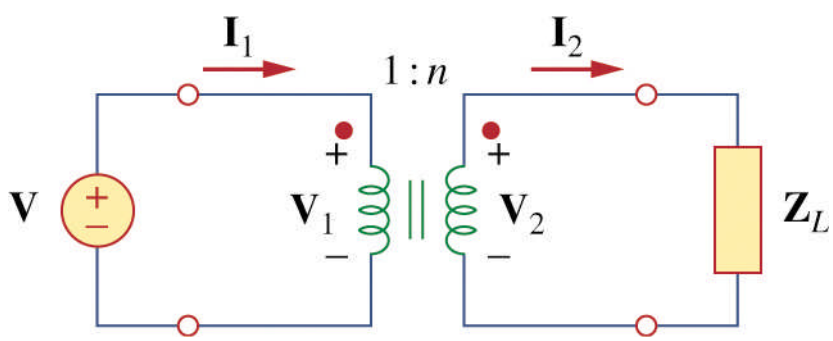

Multiple transformers

- Using reflected impedance, collapse the circuit from right to left.

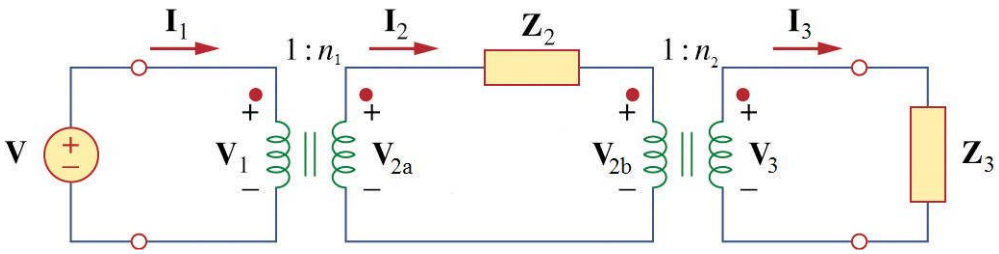

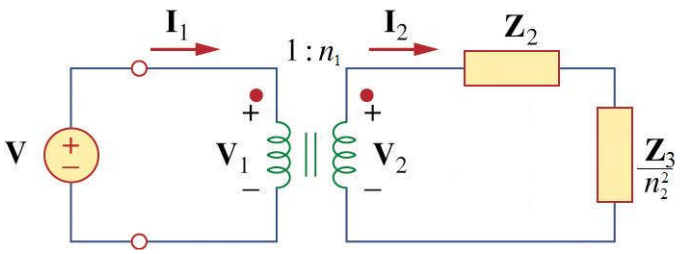

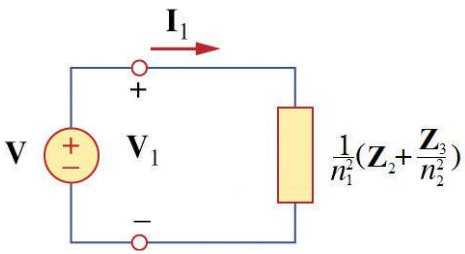

$$\mathbf{Z} = \frac{1}{n_1^2}\left(\mathbf{Z}_2 + \frac{\mathbf{Z}_3}{n_2^2}\right) = \frac{\mathbf{Z}_2}{n_1^2} + \frac{\mathbf{Z}_3}{n_1^2 n_2^2}$$

Balanced three-phase voltages

- The voltages induced in the windings are equal in magnitude but out of phase by 120°.
- The voltages $\mathbf{V}_{an}$, $\mathbf{V}_{bn}$, and $\mathbf{V}_{cn}$ are between lines a, b and c and the neutral line n.
  - These are called **phase voltages**.

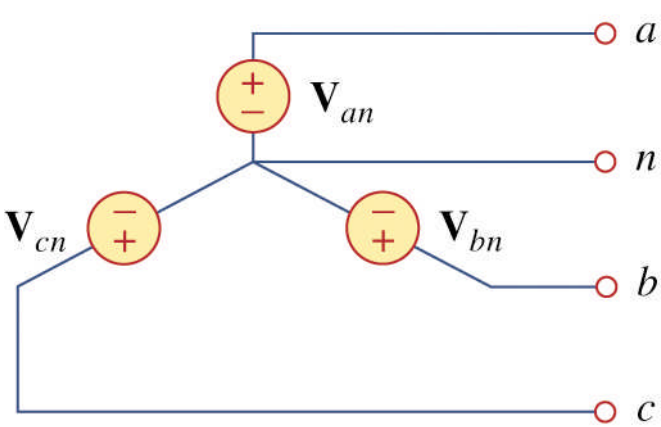

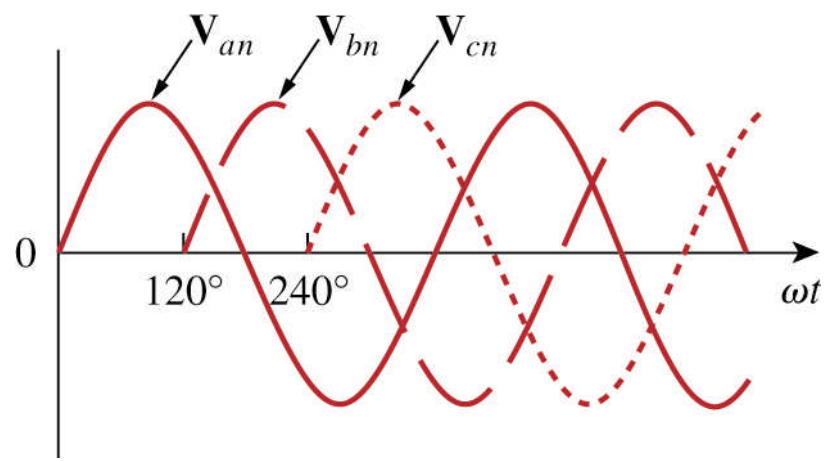

Three-phase loads

- Three-phase loads can be either wye-connected or delta-connected.

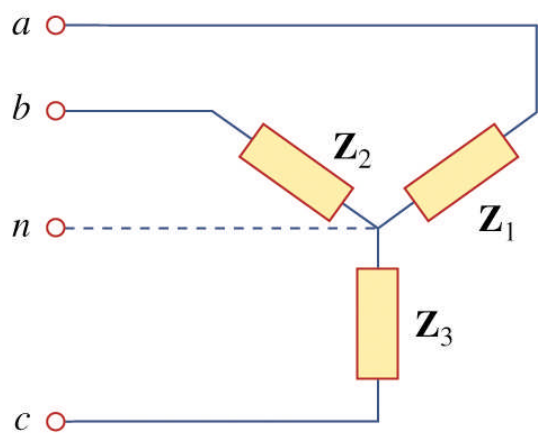

Y-connected load

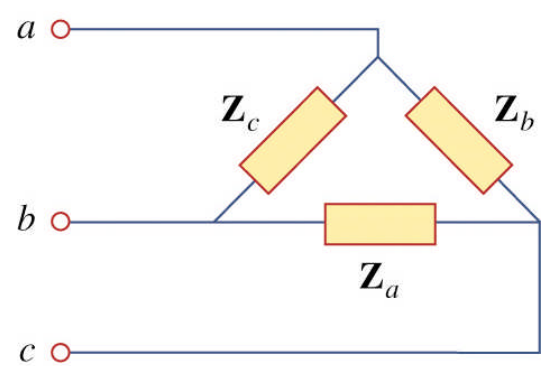

Δ-connected load

- Delta-wye transformation

$$\mathbf{Z}_\Delta = 3\mathbf{Z}_Y \quad \text{or} \quad \mathbf{Z}_Y = \frac{1}{3}\mathbf{Z}_\Delta$$

Balanced Y-Y connection

- In Y-Y connection line and phase currents are the same ($\mathbf{I}_L = \mathbf{I}_P$), but line voltages are

$$\mathbf{V}_L = \sqrt{3}V_P\angle 30^\circ$$

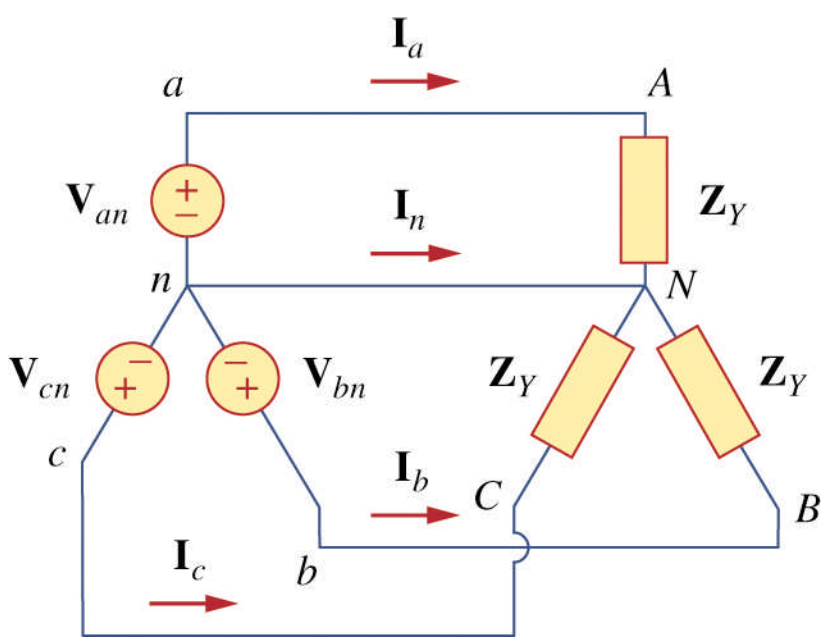

Single-phase equivalent

- In analyzing a balanced Y-Y system, it is sufficient to examine just one of the phases and apply the results to the other two phases (with appropriate phase delays).

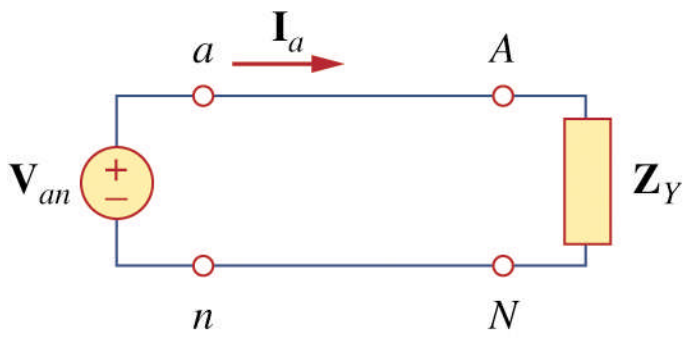

Line voltages (Y-Δ)

- For the Y-Δ system, the relation between phase and line currents at the load is

$$\mathbf{I}_{AB} = \frac{\mathbf{V}_{AB}}{\mathbf{Z}_{\Delta}}$$

$$\mathbf{I}_a = \sqrt{3}\mathbf{I}_{AB}\angle -30^\circ$$

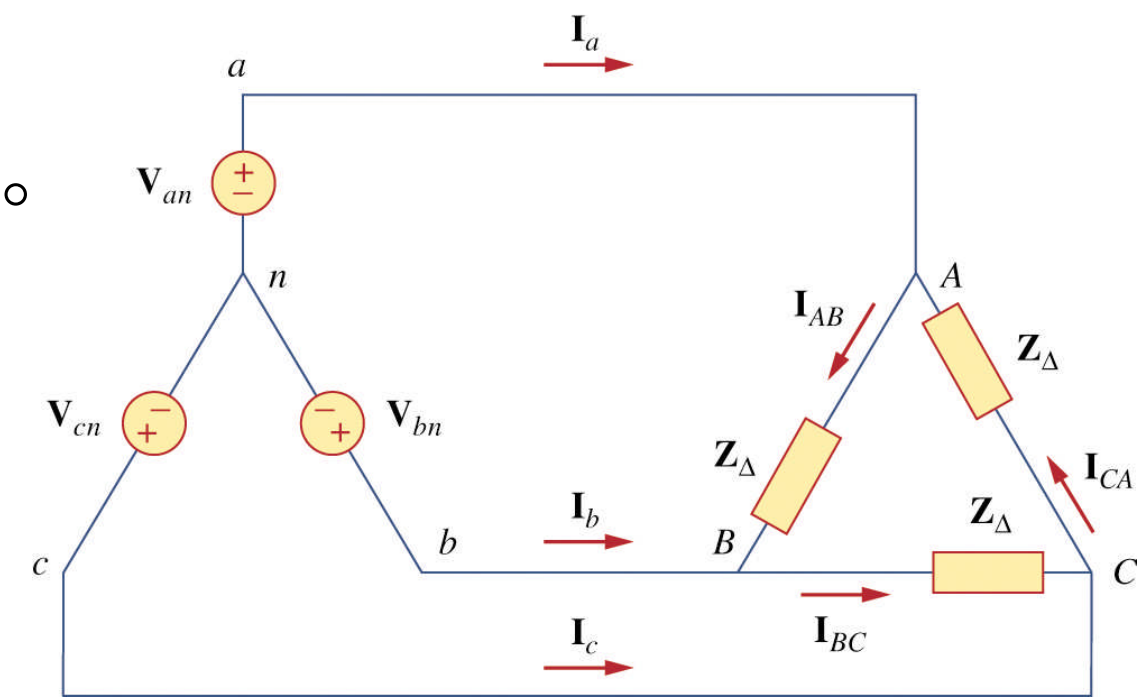

Single-phase equivalent (Y-Δ)

- In analyzing a balanced Y-Δ, we can transform the load to form an equivalent Y-Y system.

$$\mathbf{Z}_Y = \frac{\mathbf{Z}_\Delta}{3}$$

- Then a single phase can be examined to determine the phase current.

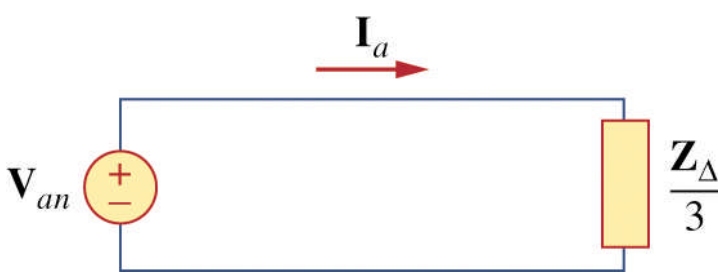

Three-phase complex power

- The complex power per phase ($\mathbf{S}_{1P}$) is

$$\mathbf{S}_{1P} = P_{1P} + jQ_{1P} = \mathbf{V}_P \mathbf{I}_P^*$$

therefore the total complex ($\mathbf{S}_{3P}$) is

$$\mathbf{S}_{3P} = 3\mathbf{S}_{1P} = 3\mathbf{V}_P \mathbf{I}_P^*$$

- In terms of the line voltages and currents,

$$\mathbf{S}_{3P} = \sqrt{3} V_L I_L \angle \theta$$

AC synchronous machines

- Per-phase equivalent

$$\tilde{E}_a = \frac{L_{SF} I_F \omega_e}{\sqrt{2}} \angle \delta$$

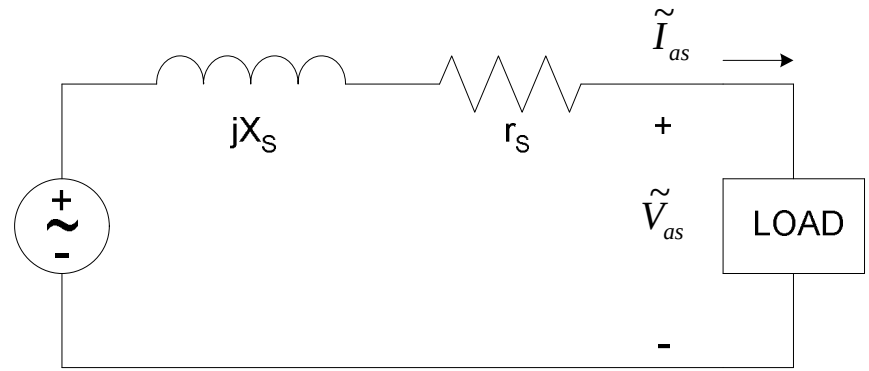

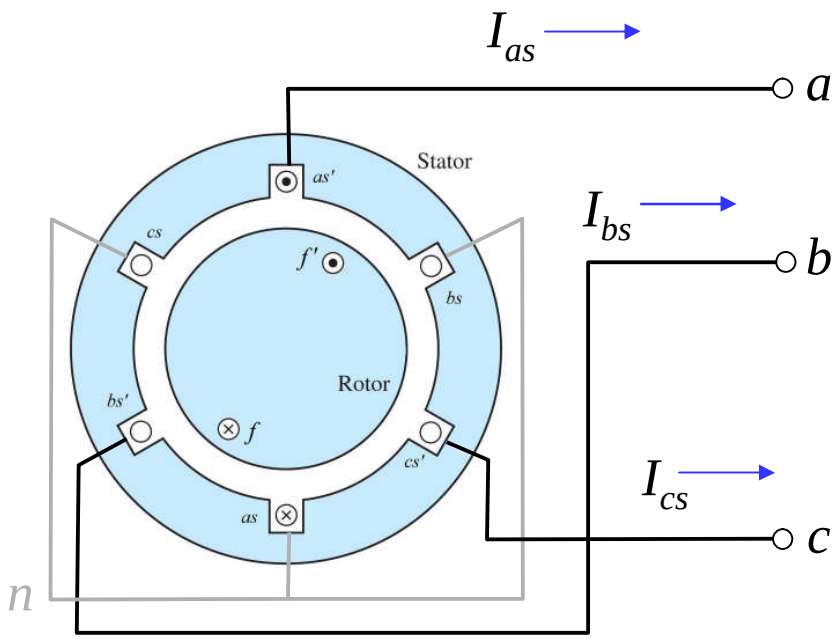

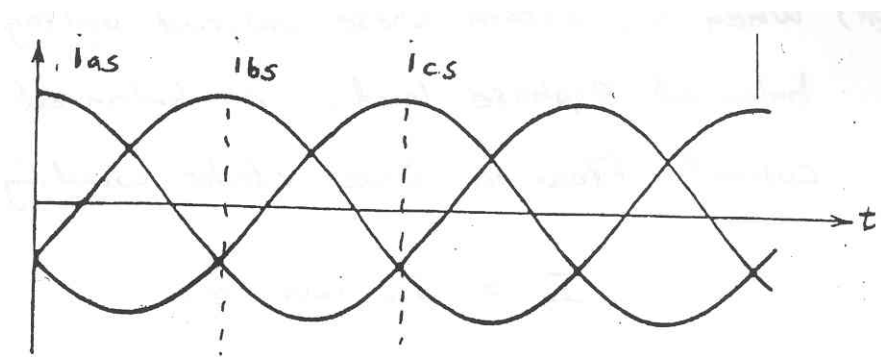

Motor speed (multiple poles)

- The relation between rotor angular velocity (ω_m) and that of the induced voltage (ω_e) is given by

$$\omega_e = \frac{P}{2}\omega_m$$

- Converting to electrical frequency (f_e) in hertz and motor speed in RPM, we have

$$2\pi f_e = \frac{P}{2}\left(N_m \frac{2\pi}{60}\right) \quad \Rightarrow \quad N_m = \frac{120 f_e}{P} \quad \text{[rpm]}$$

Per phase equivalent circuit

- The per phase equivalent can thus be drawn

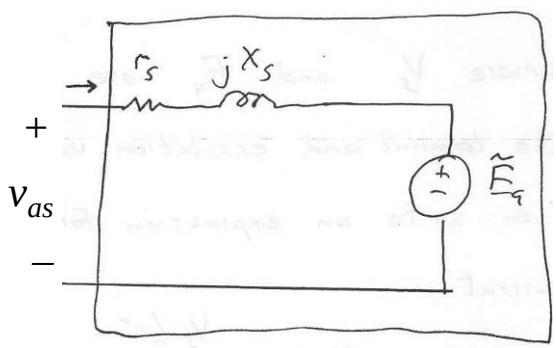

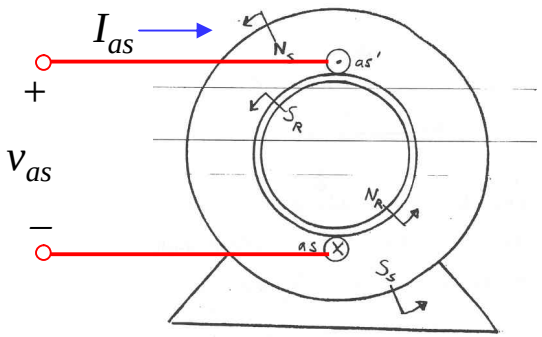

$$V_{as} = r_s I_{as} + \tilde{E}_a + jX_s \tilde{I}_{as}$$

terminal voltage (line-to-neutral) | stator winding resistance | excitation or generated voltage | synchronous reactance

- This circuit would constitute one phase of a three-phase source (either Y or Δ connected).

Per phase equivalent circuit

- This circuit would constitute one phase of a three-phase source (either Y or Δ connected).

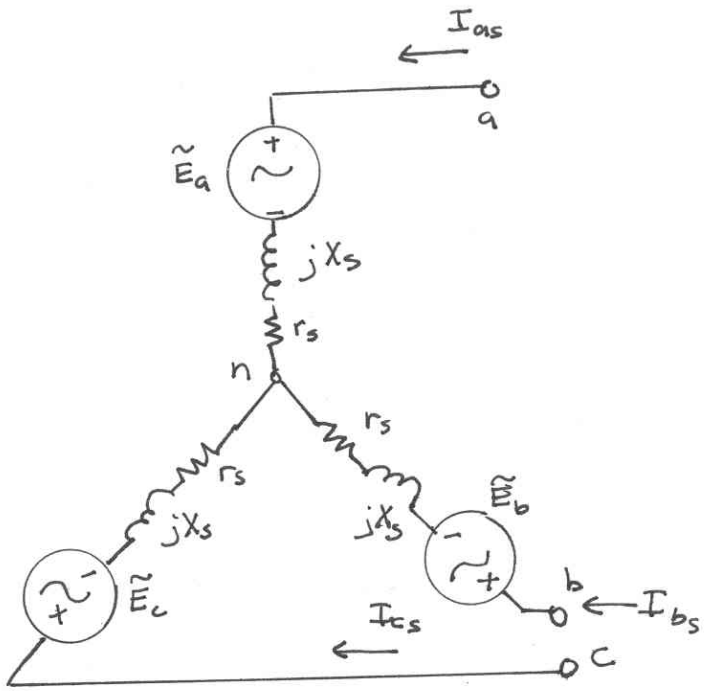

Y-connected source

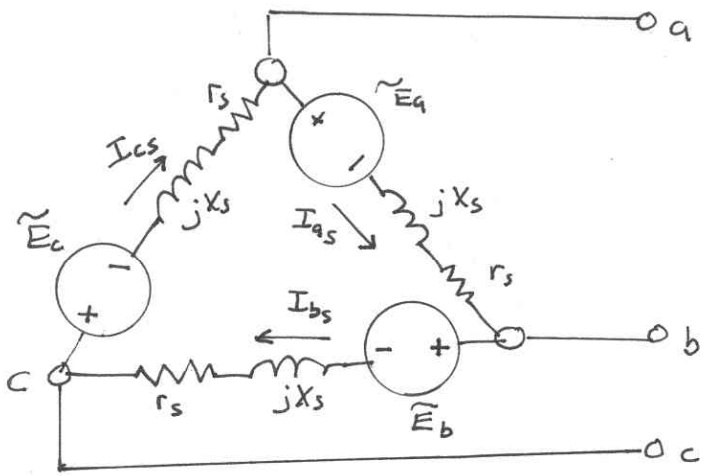

Δ-connected source