Lesson 11: Operational Amplifiers 3

Example Problem 1

Determine the value(s) of R_L that would result in R_L dissipating 2 W.

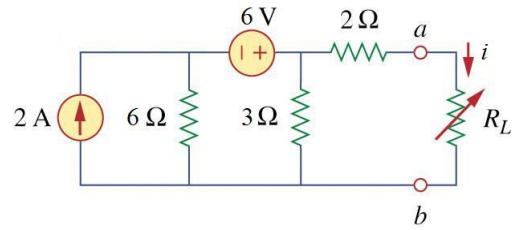

Example Problem 2

Find the voltage gain v_o/v_i of the op amp circuit below.

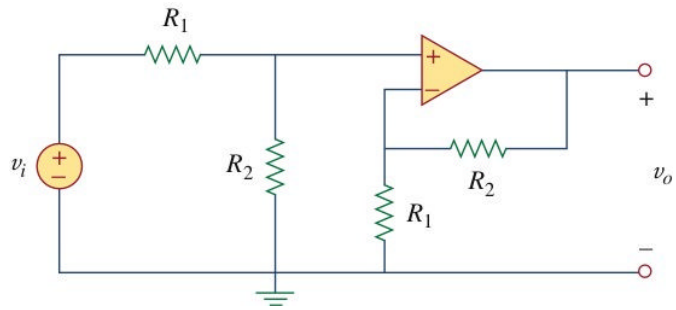

Example Problem 3

Calculate i_x and the power dissipated by the 3-kΩ resistor.

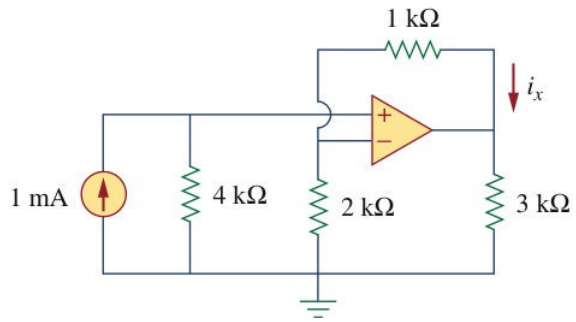

Example Problem 4

Determine i_x and i_y below.

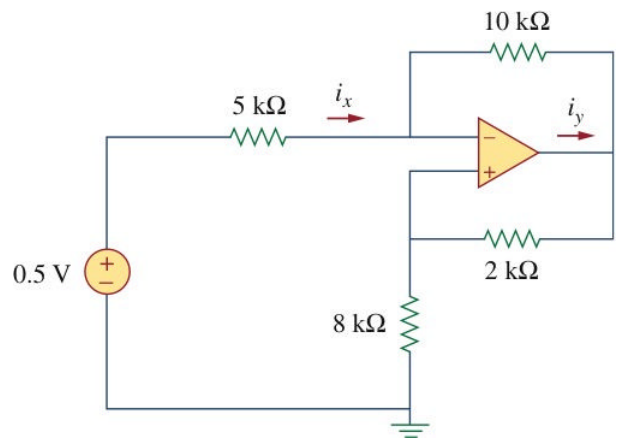

Example Problem 5

Determine the value of v_2, in order to make v_o = -16.5 V.

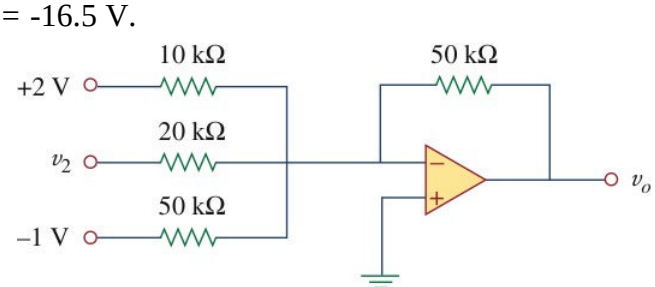

Example Problem 6
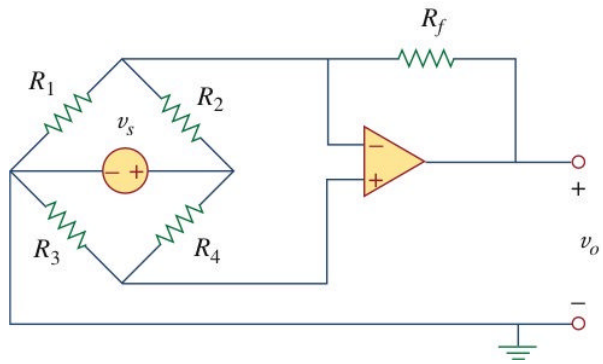
Write two KCL equations necessary to solve for v_o in terms of v_s.