Lesson 16:
Capacitors and inductors

Introduction

- Thus far we have only considered resistive circuits.
  - The voltage-current relations are algebraic.
- Capacitors and inductors are **dynamic** elements.
  - The voltage-current relations are differential.
  - They are dynamic because they store energy.

Capacitor

- A capacitor is passive element designed to store energy in its electric field.
  - Capacitors consist of parallel plates separated by an insulator (or dielectric).
  - Capacitors accumulate electric charge.

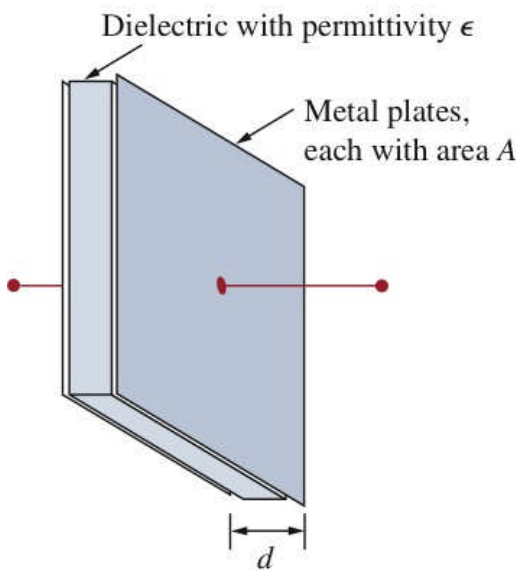

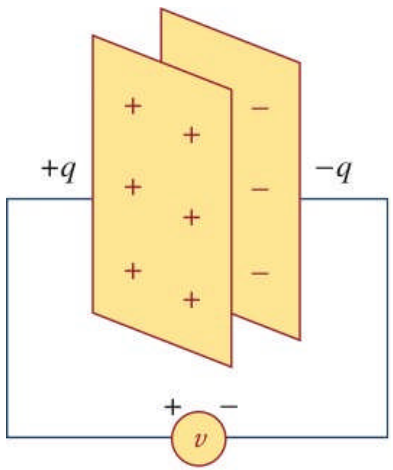

Capacitance

- When voltage is applied, $+q$ charge moves to the positive plate and $-q$ to the negative.
- The amount of charge q is directly proportional to the applied voltage v.

$$q = Cv$$

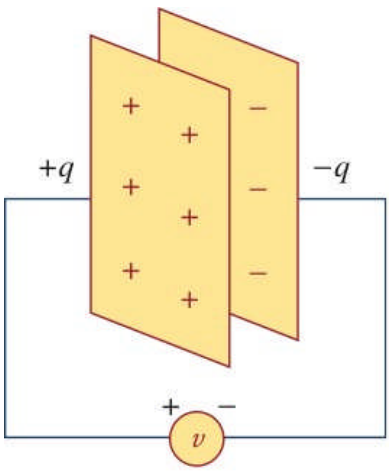

- C is the constant of proportionality known as **capacitance** with units of farads (F).

$$1 \text{ farad} = 1 \text{ coulomb/volt}$$

Capacitance

- Capacitance itself is independent of q or v, but only depends on the physical properties of the capacitor.
- For parallel-plate capacitors, capacitance is given

$$C = \frac{\varepsilon A}{d}$$

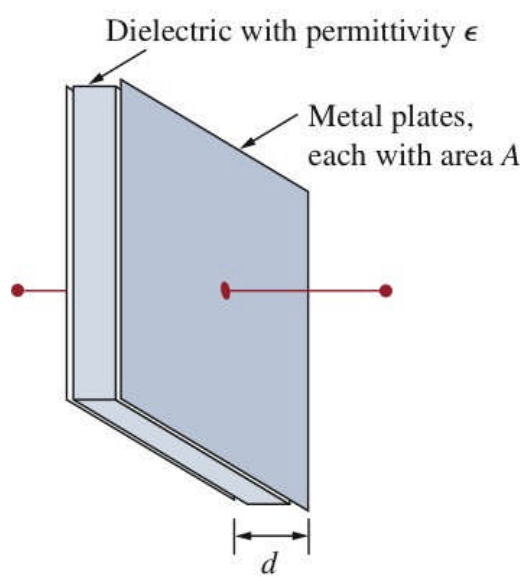

Practical capacitors

- Capacitors have typical values from in the picofarad (pF) to microfarad (μF) range.

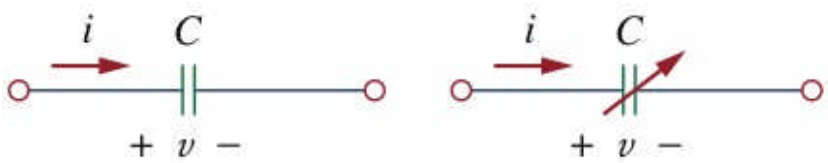

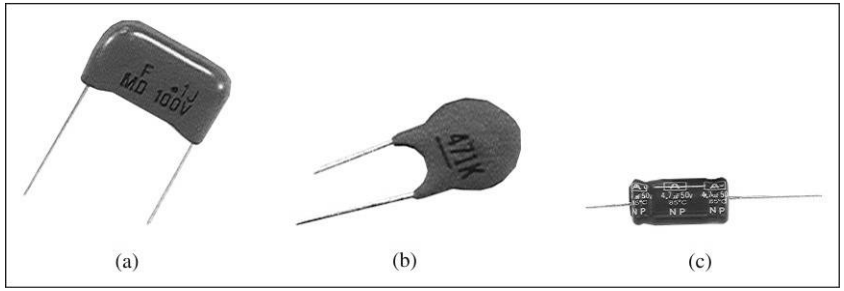

not a typical capacitor

Passive sign convention

- Capacitors can accumulate or discharge energy.
  - If $i > 0$ and $v > 0$, or $i < 0$ and $v < 0$ then the capacitor is being **charged**.
  - If $v \cdot i < 0$ then the capacitor is being **discharged**.

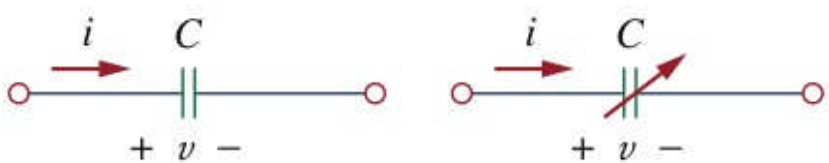

- Given that $q = Cv$, how to we obtain the current-voltage (i-v) relationship?

Current-voltage relationship

- Since current is defined $i = \frac{dq}{dt}$

  the current through a capacitor is given

$$i = C\frac{dv}{dt}$$

  - What is the capacitor current if its voltage is constant?

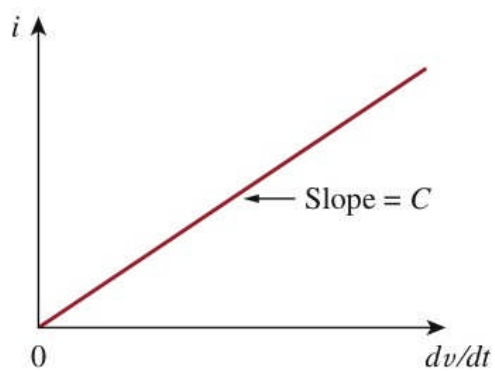

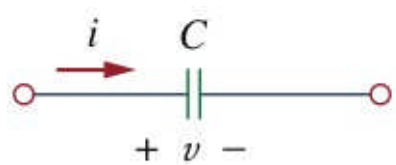

Voltage-current relationship

- The voltage-current (*v*-*i*) relation is given

$$v = \frac{1}{C}\int_{-\infty}^{t} i\,dt \quad \text{or} \quad v = \frac{1}{C}\int_{t_0}^{t} i\,dt + v(t_0)$$

Power and work

- The instantaneous power delivered is given

$$p = vi = Cv\frac{dv}{dt}$$

- The energy (or work) stored in a capacitor is given by

$$w(t) = \int_{-\infty}^{t} p\,dt = C\int_{-\infty}^{t} v\frac{dv}{dt}dt = C\int_{-\infty}^{t} v\,dv = \frac{1}{2}Cv^2(t)\Big|_{t=-\infty}^{t}$$

Assuming $v(-\infty) = 0$, we may write $w = \frac{1}{2}Cv^2$

Capacitor properties

1. When capacitor voltage is not changing in time (dc voltage), capacitor current is zero.

   A capacitor is an **open circuit** to dc.

2. Capacitor voltage must be continuous (i.e., no instantaneous changes in voltage)
3. Ideal capacitors do not dissipate energy.
4. A real (non-ideal) capacitor has a parallel model leakage resistance.

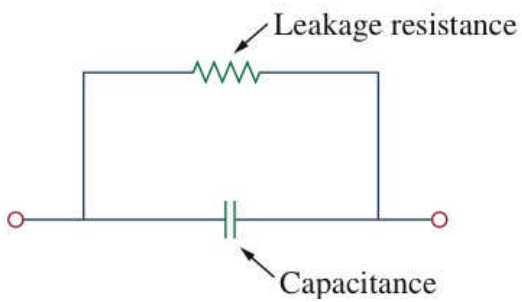

Example Problem 1

Determine the current through a 200-μF capacitor whose voltage is depicted below.

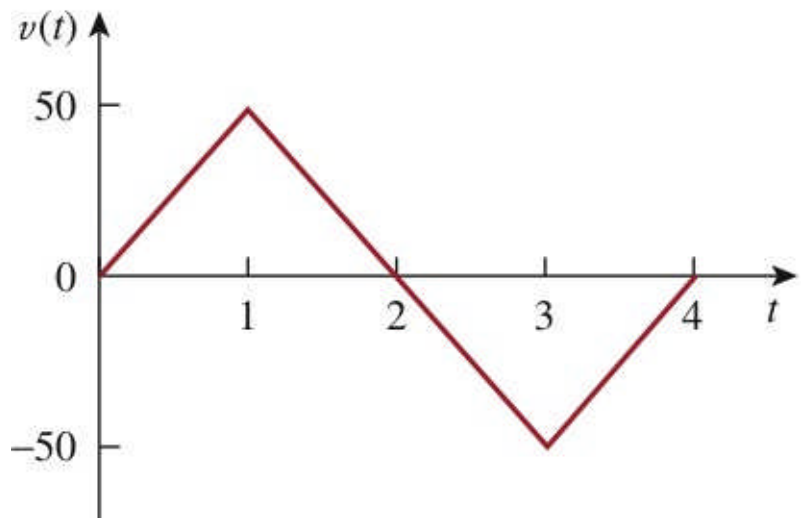

Example Problem 2

Obtain the energy stored in each capacitor under dc conditions.

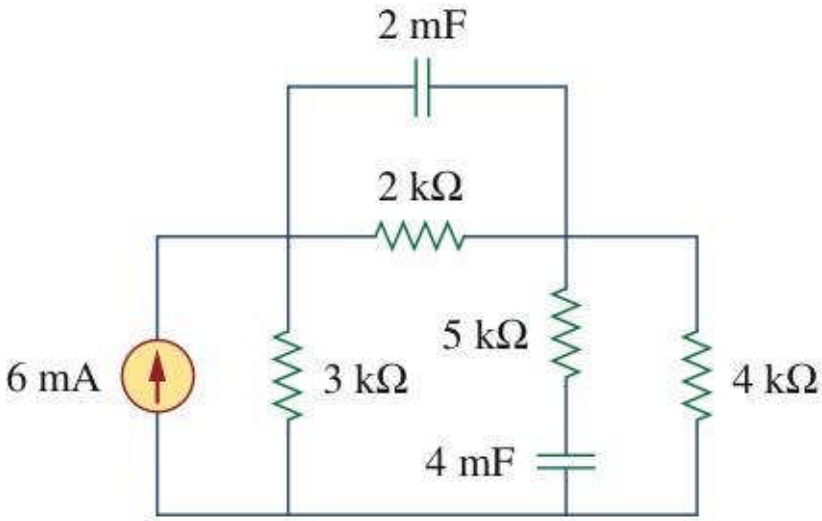

Capacitors in parallel

- Consider N capacitors in parallel connected to a current source i.

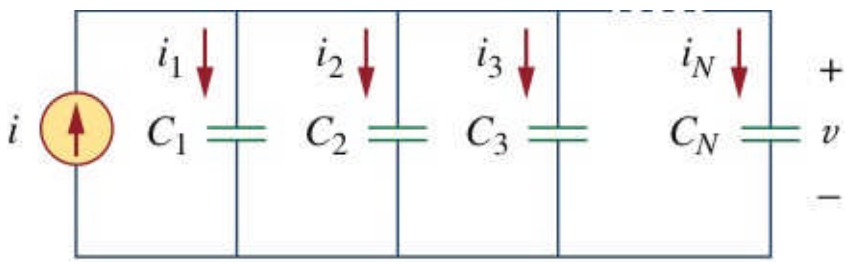

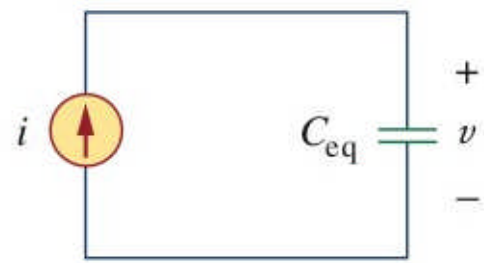

- How do we obtain a equivalent capacitance C_{eq}?

Capacitors in parallel

The equivalent capacitance of N parallel-connected capacitors is the sum of the individual capacitances.

$$C_{\text{eq}} = C_1 + C_2 + C_3 + \cdots + C_N$$

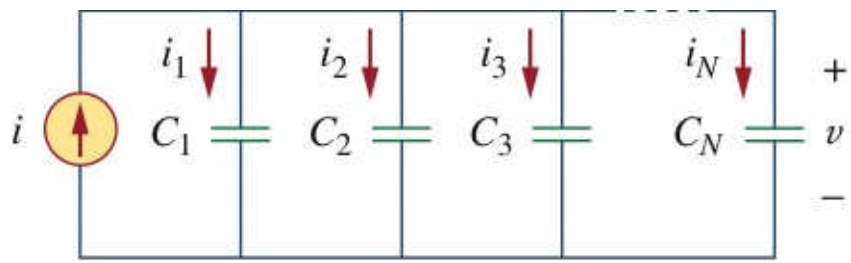

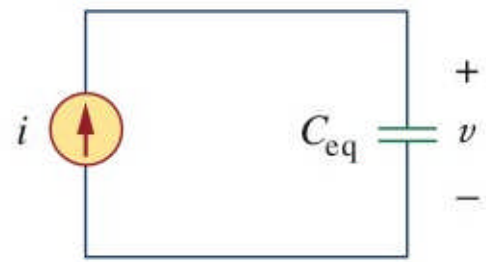

Capacitors in series

- Consider N capacitors in series connected to a voltage source v.

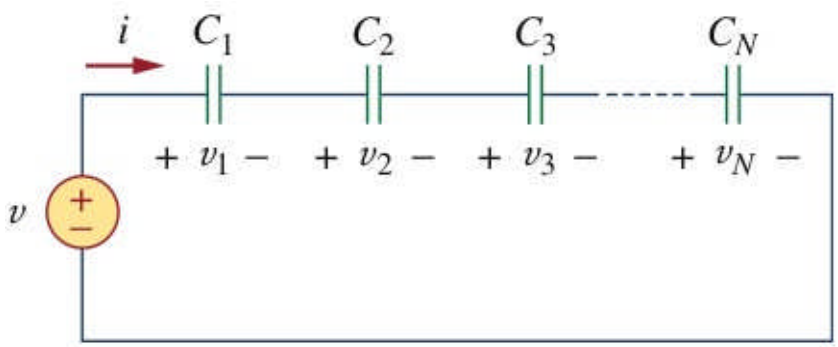

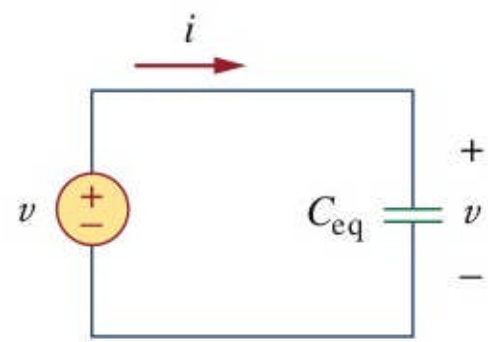

- How do we obtain a equivalent capacitance C_{eq}?

Capacitors in series

The equivalent capacitance of N capacitors connected in series is the reciprocal of the sum of the reciprocals of the individual capacitances.

$$\frac{1}{C_{\text{eq}}} = \frac{1}{C_1} + \frac{1}{C_2} + \frac{1}{C_3} + \cdots + \frac{1}{C_N}$$

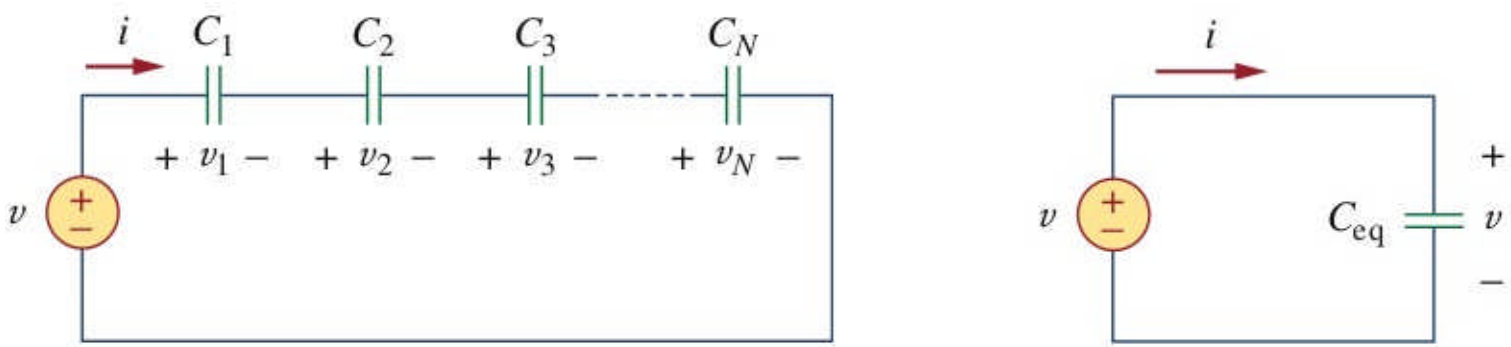

Example Problem 3

Find the equivalent capacitance seen between terminals a and b of the circuit below.

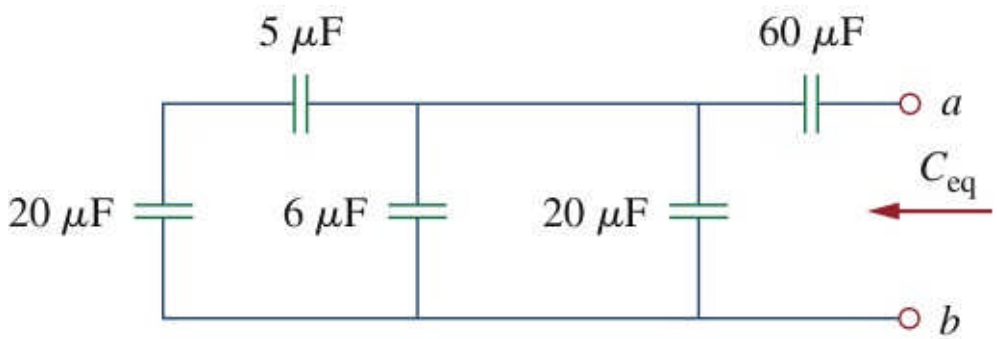

Example Problem 4

Find the voltage across each capacitor.

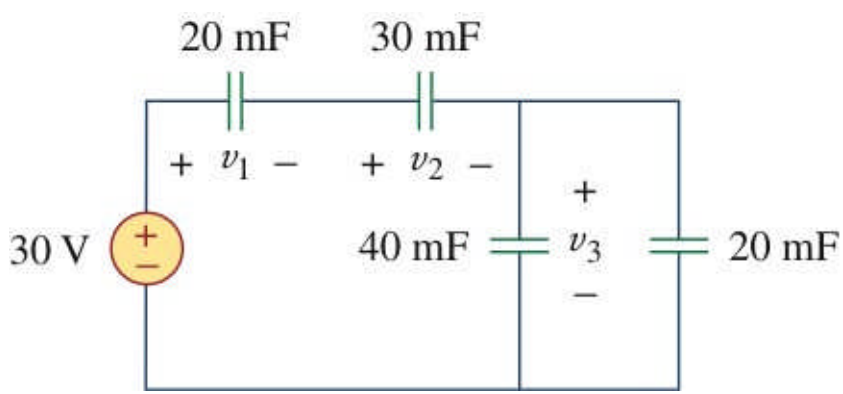

Inductor

- An inductor is a passive element designed to store energy in its magnetic field.
  - Inductors consist of a coil of wire, often wound around a core of high magnetic permeability.

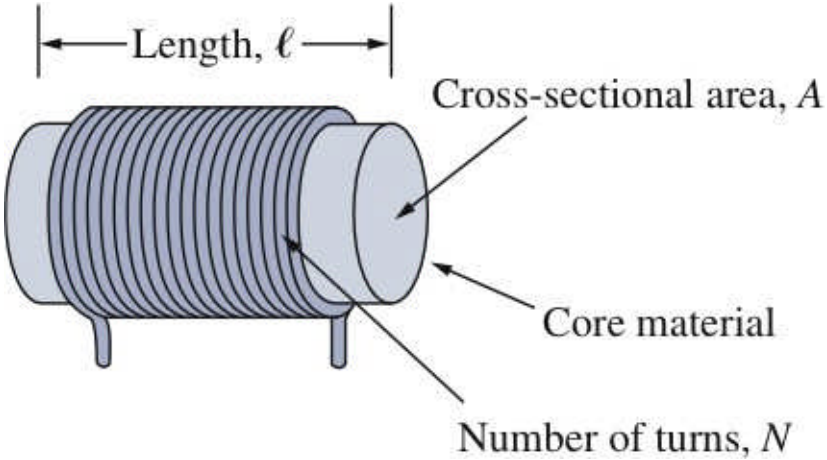

Inductance

- When current passes through an inductor, the voltage is directly proportional to the time rate of change of the current i.

$$v = L\frac{di}{dt}$$

  - L is the constant of proportionality known as **inductance** and its unit is the henry (H).

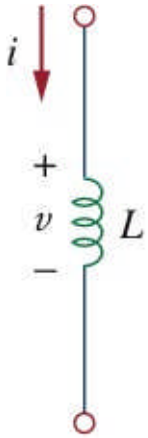

$$1 \text{ henry} = 1 \text{ volt} \cdot \text{second/ampere}$$

Inductance

- Inductance is dependent on the physical dimensions and construction of an inductor.
- For the inductor below, inductance L is given

$$L = \frac{N^2 \mu A}{\ell}$$

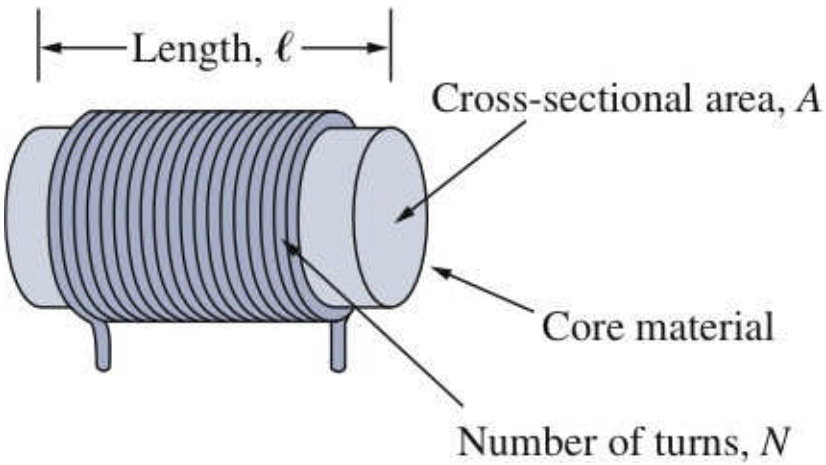

Practical inductors

- Inductors have typical values from microhenries (μH) to tens of henries (H).

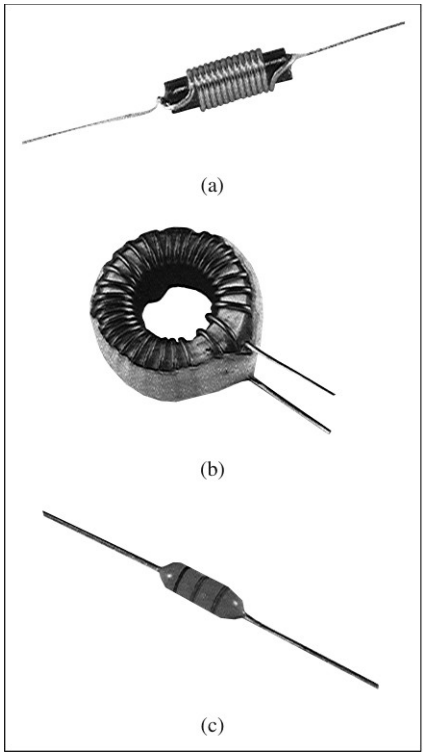

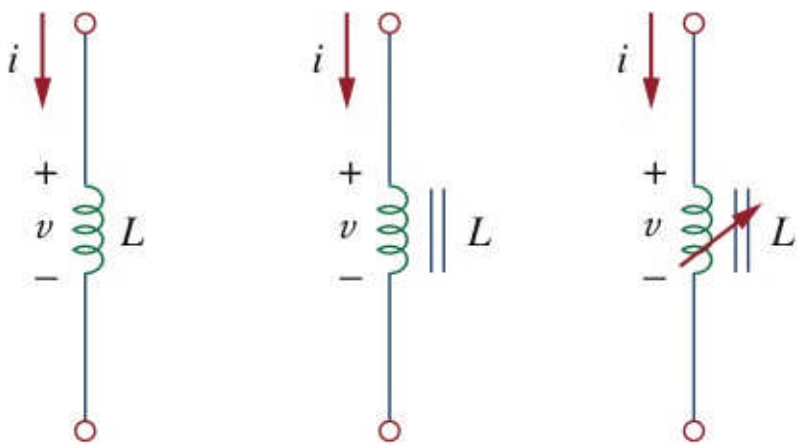

Current-voltage relationship

- Since voltage is defined $v = L\dfrac{di}{dt} \Rightarrow di = \dfrac{1}{L} v\,dt$

  the current through an inductor is given

$$i = \frac{1}{L}\int_{-\infty}^{t} v(t)\,dt \quad \text{or} \quad i = \frac{1}{L}\int_{t_0}^{t} v(t)\,dt + i(t_0)$$

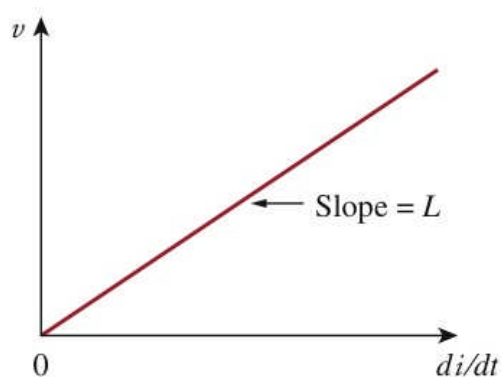

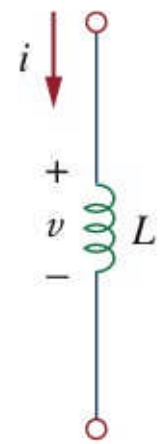

Power and work

- The instantaneous power delivered is given

$$p = vi = \left(L\frac{di}{dt} \right) i$$

- The energy (or work) stored in an inductor is given by

$$w(t) = \int_{-\infty}^{t} p\,dt = L\int_{-\infty}^{t} i\frac{di}{dt}dt$$

$$= L\int_{-\infty}^{t} i\,di = \frac{1}{2}Li^2(t) - \frac{1}{2}Li^2(-\infty)$$

Assuming $i(-\infty) = 0$, we may write $w = \frac{1}{2}Li^2$

Inductor properties

1. When inductor current is not changing in time (dc) inductor voltage is zero.

   An inductor is a **short circuit** to dc.

2. Inductor current must be continuous (i.e., no instantaneous changes in current)
3. Ideal inductors do not dissipate energy.
4. A real (non-ideal) inductor has a model winding resistance R_w and winding capacitance C_w.

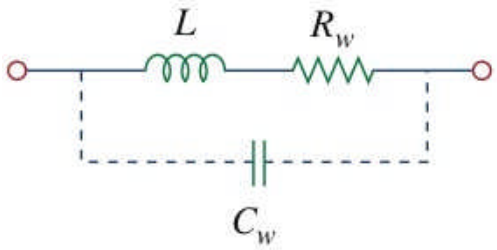

Example Problem 5

Under dc conditions find i, v_C, and i_L. Also, determine the energy stored in the capacitor and inductor.

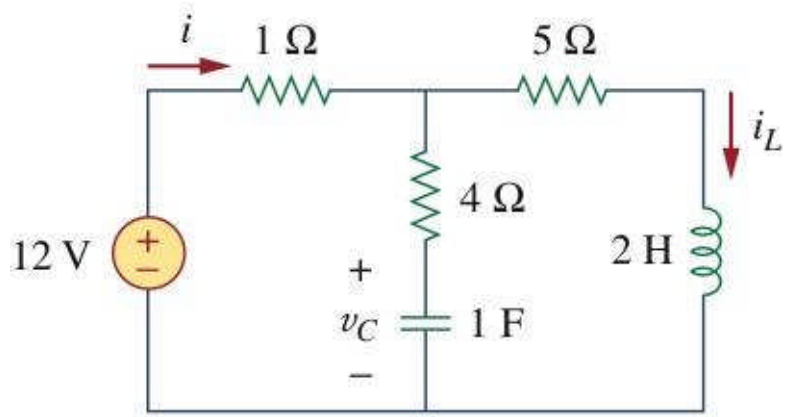

Inductors in series

- Consider N inductors in series with the same current i.

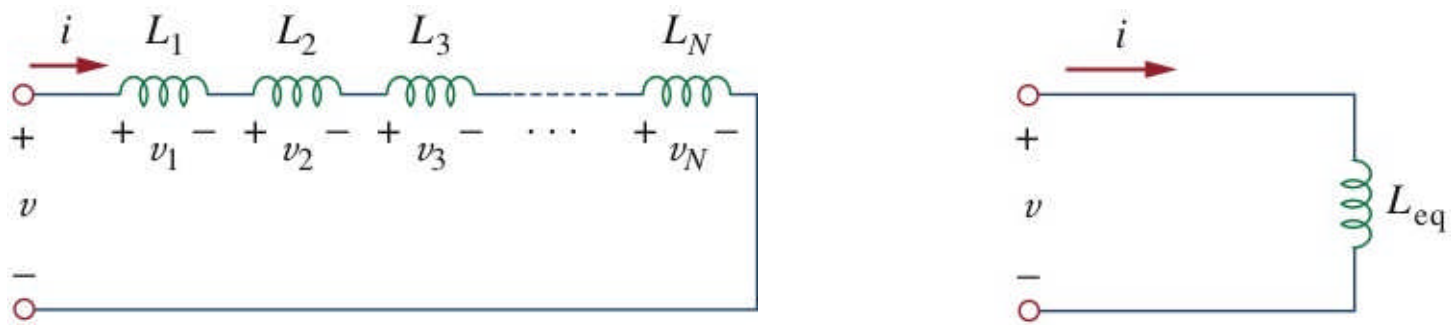

- How do we obtain a equivalent inductance L_{eq}?

Inductors in series

The equivalent inductance of N inductors connected in series is the sum of the individual inductances.

$$L_{\text{eq}} = L_1 + L_2 + L_3 + \cdots + L_N$$

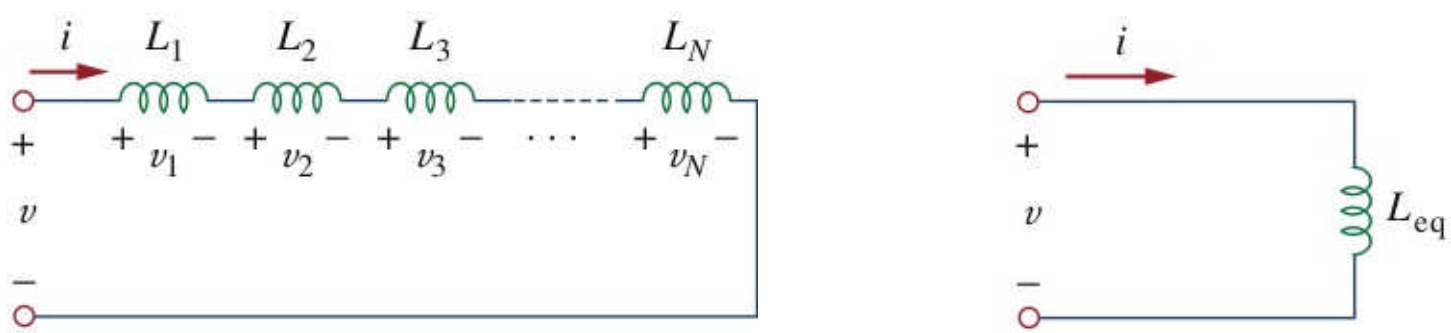

Inductors in parallel

- Consider N parallel-connected inductors with the same voltage v.

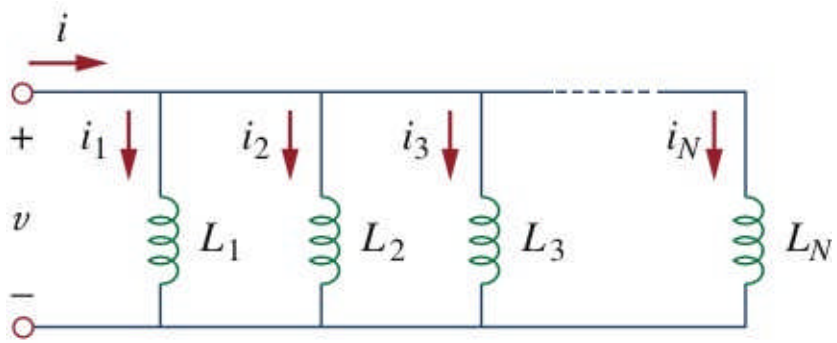

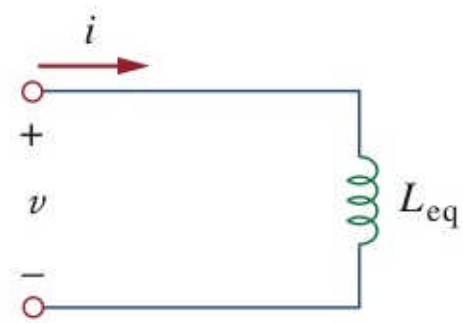

- How do we obtain a equivalent inductance L_{eq}?

Inductors in parallel

The equivalent inductance of N inductors connected in parallel is the reciprocal of the sum of the reciprocals of the individual inductances.

$$\frac{1}{L_{\text{eq}}} = \frac{1}{L_1} + \frac{1}{L_2} + \frac{1}{L_3} + \cdots + \frac{1}{L_N}$$

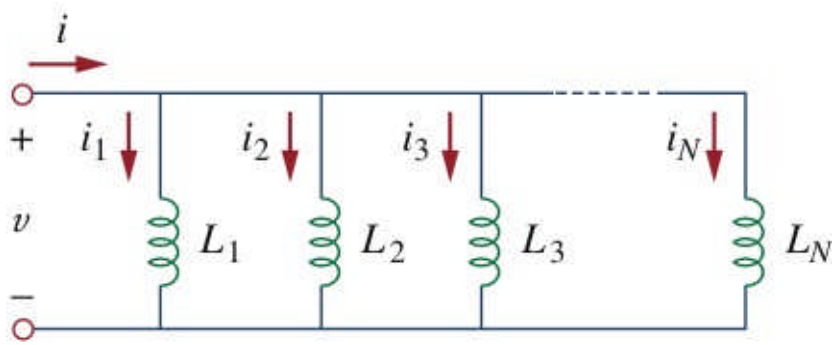

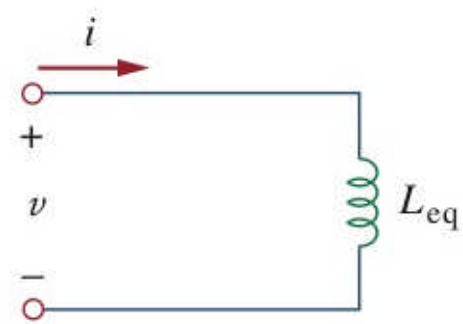

Example Problem 6

Calculate the equivalent inductance for the inductive ladder network below.

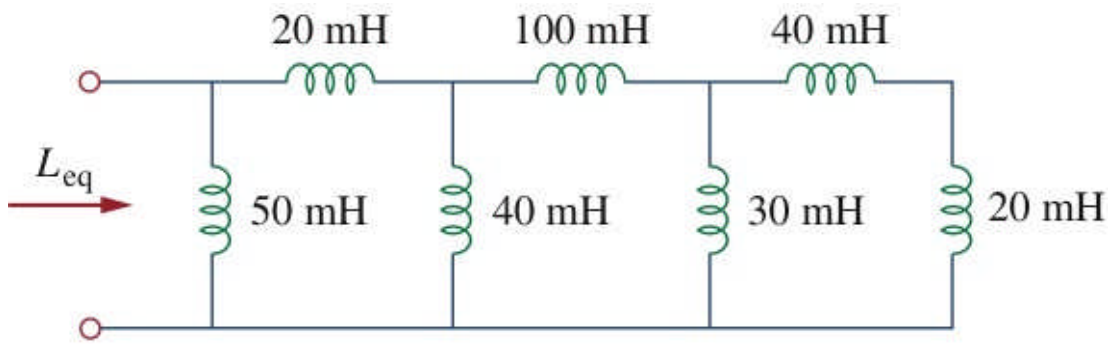

Example Problem 7

For the circuit below, $i(t) = 4\,(2 - e^{-10t})$ mA. If $i_2(0) = -1$ mA, find

a. $i_1(0)$

b. $v(t)$, $v_1(t)$, and $v_2(t)$,
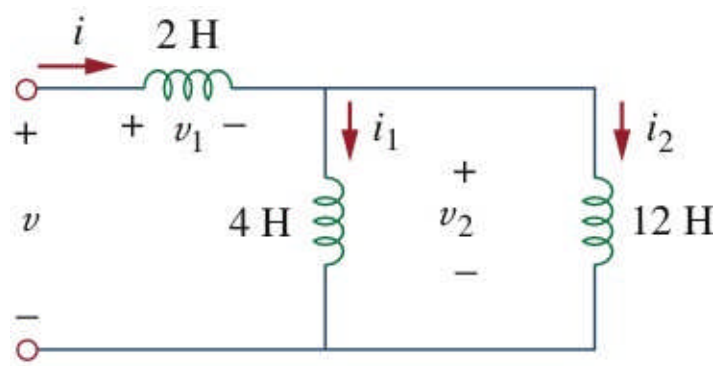
c. $i_1(t)$ and $i_2(t)$