# Lesson 1: Introduction to Circuit Analysis

# Outline

- Introduction
- System of units
- Charge and current
- Voltage
- Power and energy
- Circuit elements

# SI system of units

- The six primary fundamental units are
  - Length – **m**eter (m)
  - Mass – **k**ilogram (kg)
  - Time – **s**econd (s)
  - Current – ampere (A)
  - Temperature – kelvin (K)
  - Luminous intensity – candela (cd)
- These six base units constitute the *Système Internationale* (SI).

# SI derived units

- The combinations of the fundamental units are used to create **derived units**.

| **Quantity** | **Unit** | **Base** |
|---|---|---|
| Force ($F$) | newton (N) | 1 N = 1 kg·m/s$^2$ |
| Work, energy ($W$) | joule (J) | 1 J = 1 N·m |
| Power ($P$) | watt (W) | 1 W = 1 J/s |
| Charge ($Q$, $q$) | coulomb (C) | |
| Voltage ($V$,$v$,$E$,$e$) | Volt (V) | |

# SI prefixes

- In the SI system (unlike English), common multiple powers of 10 are denoted using engineering prefixes.

| Power | Prefix | Power | Prefix |
|---|---|---|---|
| $10^{15}$ | peta (P) | $10^{-3}$ | milli (m) |
| $10^{12}$ | tera (T) | $10^{-6}$ | micro ($\mu$) |
| $10^{9}$ | giga (G) | $10^{-9}$ | nano (n) |
| $10^{6}$ | mega (M) | $10^{-12}$ | pico (p) |
| $10^{3}$ | kilo (k) | $10^{-15}$ | femto (f) |

# Engineering notation

- It is common practice in engineering to avoid using exponential notation if a suitable engineering prefix exists.
- For example:

$15 \times 10^{-5}$ sec } *not* common engineering practice

150 μs
0.15 ms } common engineering practice

# A review from physics

- Forces
  - Gravitational force
  - Electromagnetic force
  - Strong nuclear force
  - Weak nuclear force

# Charge

- The most basic quantity in an electrical circuit is *electric charge*.
- **Charge** is an electrical property of the atomic particles of which matter consists, measured in coulombs (C).

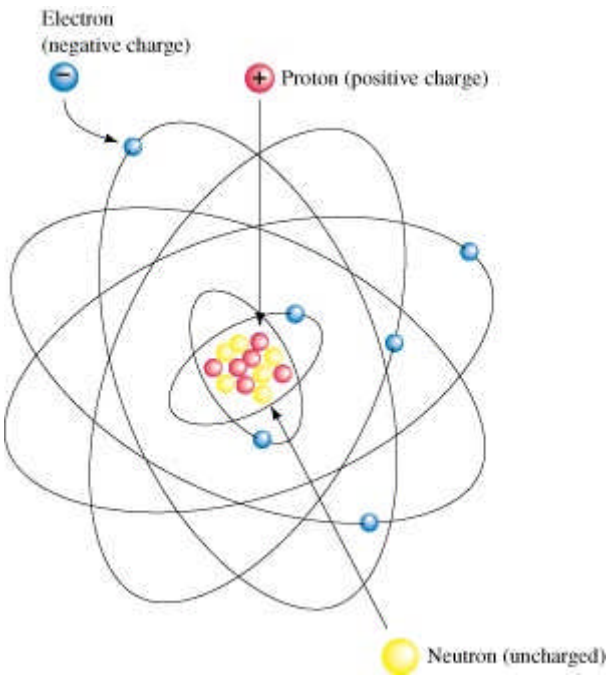

# Charge

1. The smallest unit of charge is an electron which $e = -1.602 \times 10^{-19}$ C.
2. The coulomb is a large amount of charge. In 1 C of charge there are $6.24 \times 10^{18}$ electrons.
3. The *law of conservation of charges* states that charge can neither be created or destroyed, only transferred.

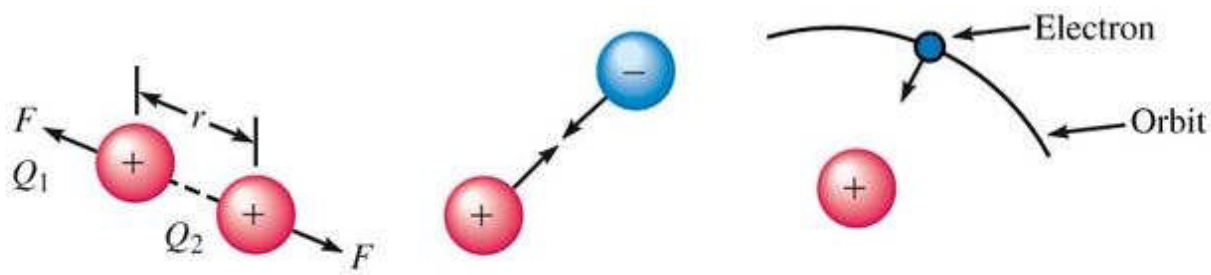


(a) Like charges repel (b) Unlike charges attract (c) The force of attraction keeps electrons in orbit

# Current

- **Electric current** is the time rate of change of charge, measured in amperes (A).
- Mathematically, current ($i$) is defined

$$i \triangleq \frac{dq}{dt}$$

- The measure of current, an **ampere** is define as a rate of flow of one coulomb of charge per second.

$$1 \text{ ampere} = 1 \text{ coulomb/second}$$

# Current

- The total charge transferred between time $t_0$ and $t$ is given by

$$Q \triangleq \int_{t_0}^{t} i\,dt$$

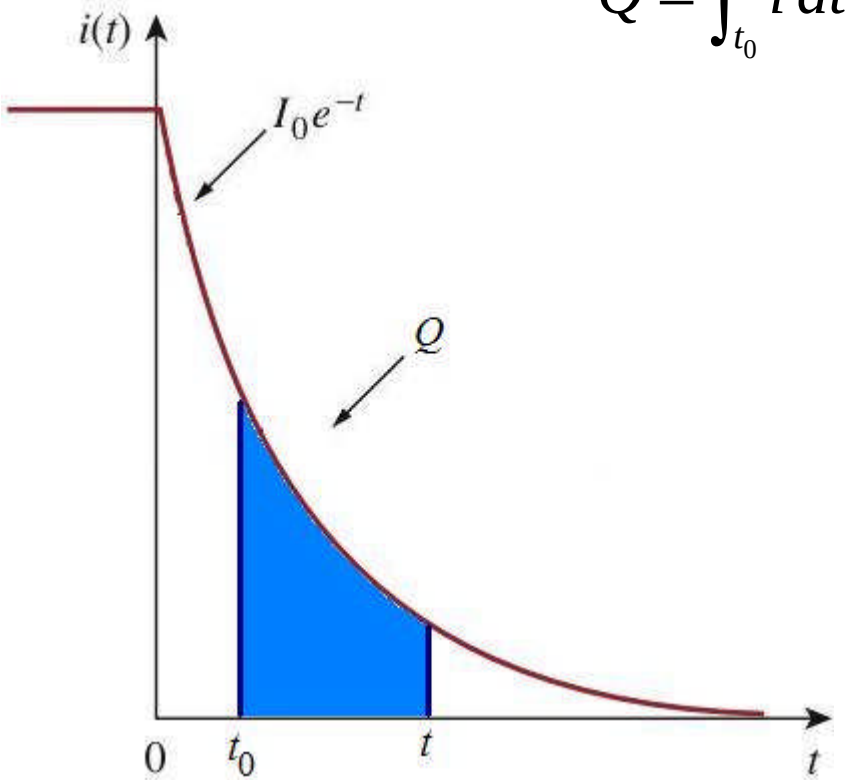

# Types of current

- **Direct current** (dc) is a current that remains constant with time and is represented by $I$.
- **Alternating current** (ac) is a current that varies sinusoidally with time and is represented by $i$.

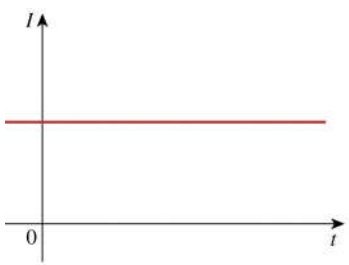


dc current

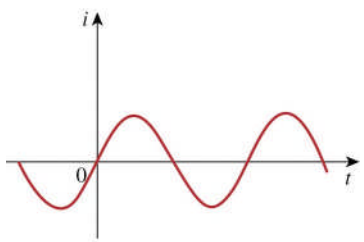


ac current

# Example Problem 1

Determine the total charge leaving the circuit element between $t$ = 1 s and $t$ = 2 s if the current through the device is given

$$i(t) = 10e^{-5t} \text{ A}$$

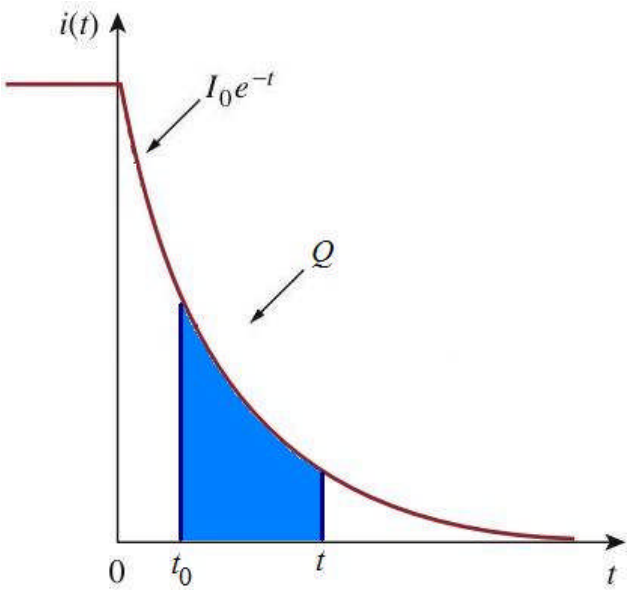

# Current direction

- Initially it was believed that current was the flow of positive charges. This is called **conventional current direction**.
- The actual flow of charge is by electrons (negative charge) called **electron flow direction**.
- We will use **conventional** current.

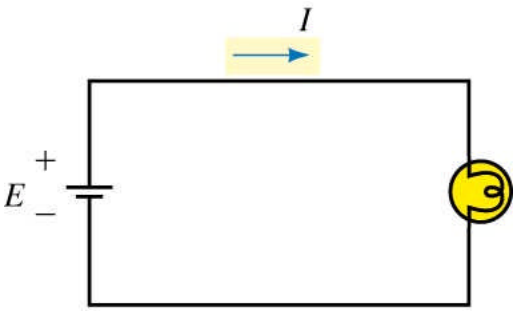


(a) Conventional current direction

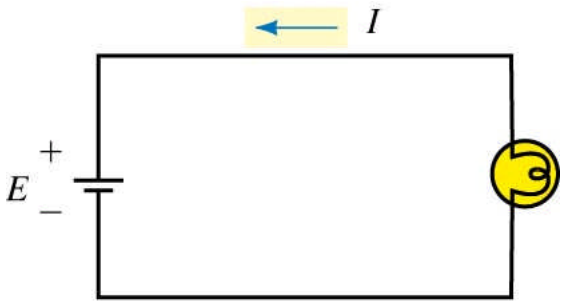


(b) Electron flow direction

# Why does current flow?

- Current is the movement of charge, but how do we get charges to move?
- The movement of charge is the result of an electromotive force (EMF).
- Moving an electron in a conductor requires work or energy transfer.

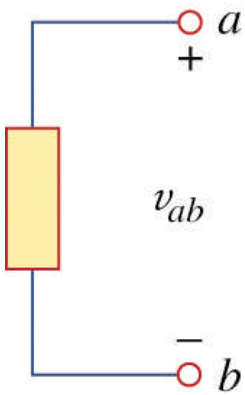

# Voltage

- The **voltage** $v_{ab}$ between two points $a$ and $b$ in a circuit is the work (energy) needed to move a unit charge from $a$ to $b$

$$v_{ab} \triangleq \frac{dw}{dq}$$

where $w$ is energy in joules (J) and $q$ is charge in coulombs (C).

$$1 \text{ volt} = 1 \text{ joule/coulomb} = 1 \text{ newton-meter/coulomb}$$

# Voltage

- It can be said that
  - Point $a$ is at a potential $v_{ab}$ volts higher than point $b$.
  - The potential at point $a$ with respect to point $b$ is $v_{ab}$.
  - Also, $v_{ab} = -v_{ba}$

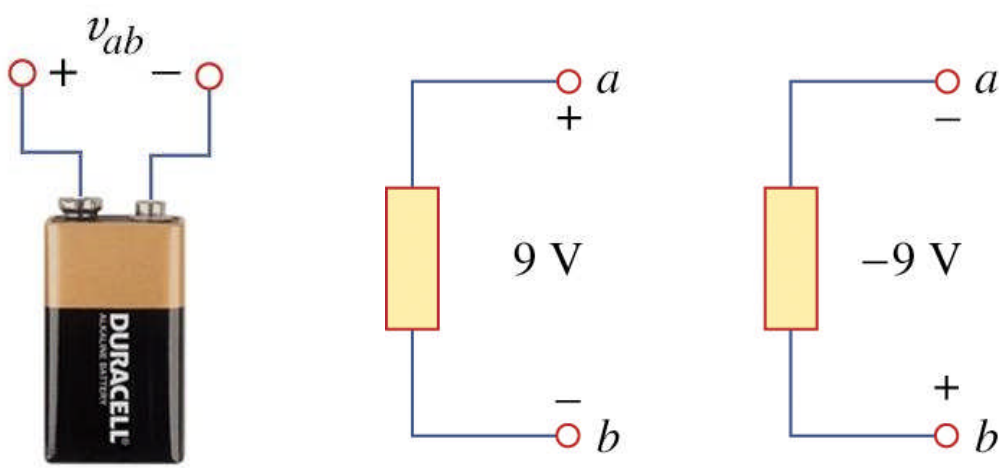


$v_{ab} = 9$ V $\qquad$ $v_{ba} = -9$ V

# An important semantic distinction

- Current is always **through** an element.
- Voltage is always **across** an element or between to two points.

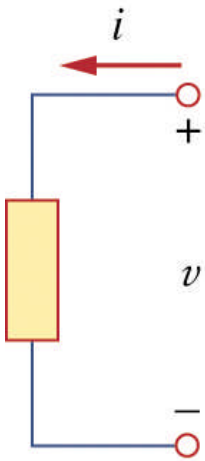

# Power

- Power is defined as the rate of doing work or the rate of energy transfer, measured in watts.

$$p \triangleq \frac{dw}{dt}$$

where $p$ is power in watts (W).

- We need to express this in terms of voltage and current.

current $\quad i \triangleq \dfrac{dq}{dt}$

voltage $\quad v \triangleq \dfrac{dw}{dq}$

$$\Rightarrow \quad p = \frac{dw}{dt} = \frac{dq}{dt} \cdot \frac{dw}{dq} = vi$$

# Power

- The power $p$ is a time-varying quantity and is called *instantaneous power.*

$$p = vi$$

# Power flow

- Power flow is indicated by the sign.
  - If power has a + sign, power is being delivered to or **absorbed** by an element.
  - If power has a - sign, power is being **supplied** by the element.

power being absorbed

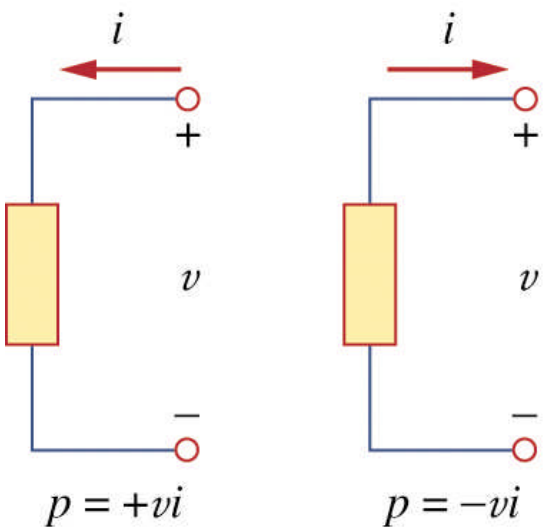


power being supplied

# Passive sign convention

- Current flow and voltage polarity determine the sign of the power.
- The **passive sign convention** is satisfied when current enters through the positive polarity of the voltage and $p = +vi$ (power is being absorbed).
- If current enters the negative terminal, $p = -vi$.

power being absorbed

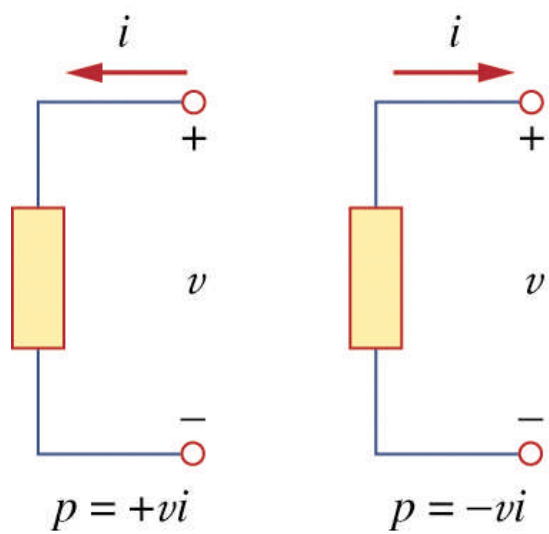


power being supplied

# Conservation of energy

- The law of conservation of energy must be obeyed in any electric circuit, thus

$$\sum p = 0$$

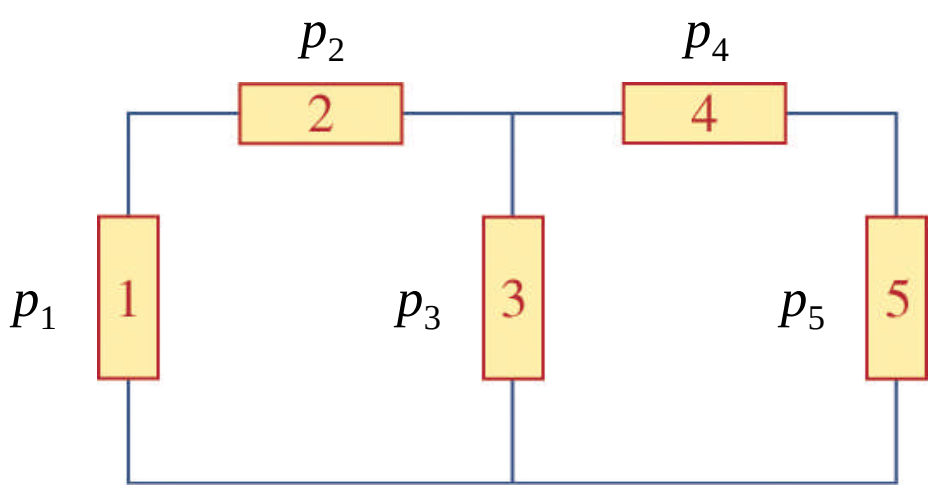

# Energy

- The energy ($w$) measured in joules (J) absorbed or supplied by an element from $t_0$ to $t$ is

$$w = \int_{t_0}^{t} p\, dt = \int_{t_0}^{t} vi\, dt$$

- Utility companies measure energy in kilowatt-hours (kWh)

$$1\ \text{kWh} = 3{,}600{,}000\ \text{J} = 11.8¢$$

my BGE bill for July 2008

BGE
A Constellation Energy Company

# Circuit elements

- There are two types of elements in circuits:
  - **Active** elements are capable of generating energy (batteries, generators, amplifiers).
  - **Passive** elements are not capable of generating energy (resistors, capacitors, inductors).

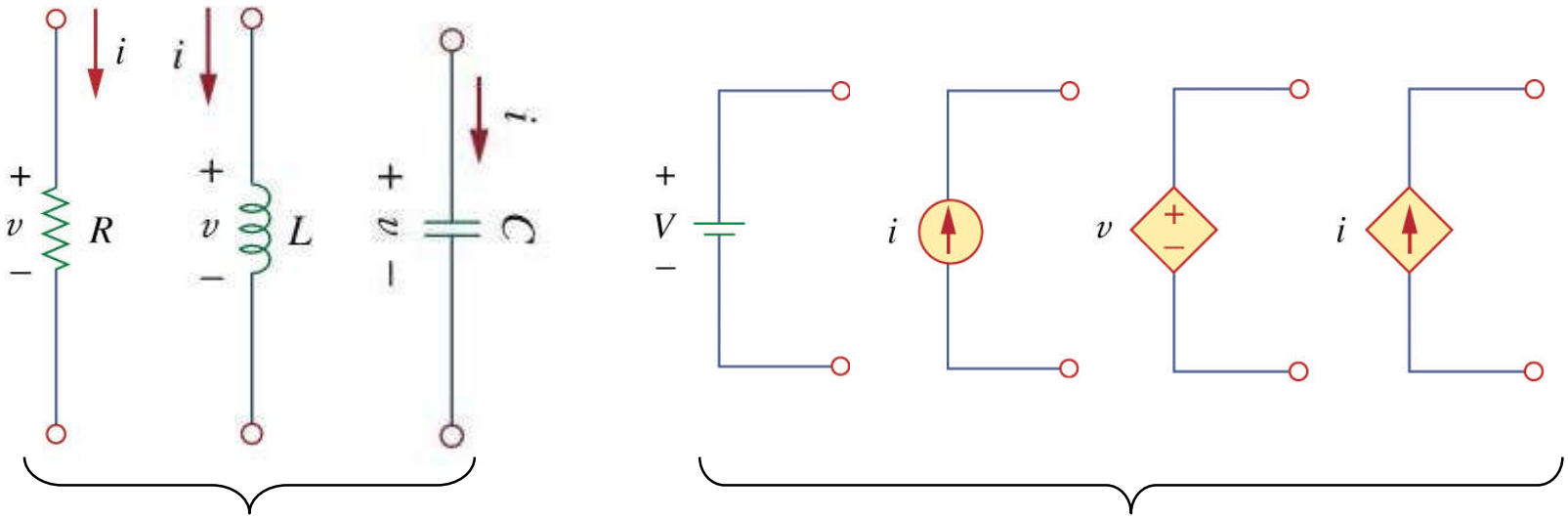


passive elements

active elements

# Sources

- The most important active elements are voltage and current sources.
- There are two kinds of sources
  - An **ideal independent source** is an active element that provides a specified voltage or current that is completely independent of other circuit elements.

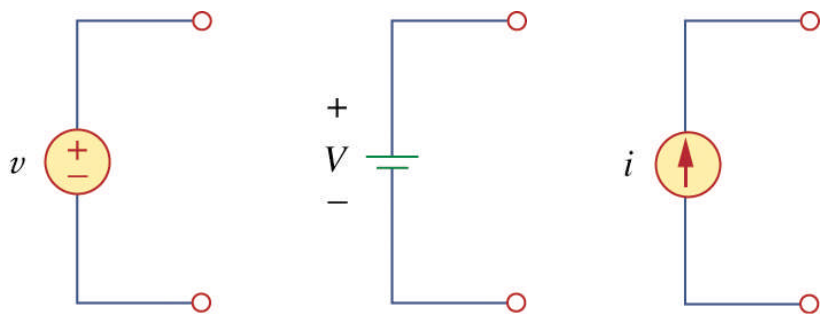


time-varying voltage source | constant voltage (dc) | current source

# Sources

- An **ideal dependent source** is an active element in which the source quantity is controlled by another voltage or current.
- There are four possible dependent sources:
  - Voltage-controlled voltage source (VCVS)
  - Current-controlled voltage source (CCVS)
  - Voltage-controlled current source (VCCS)
  - Current-controlled current source (CCCS)

dependent voltage source

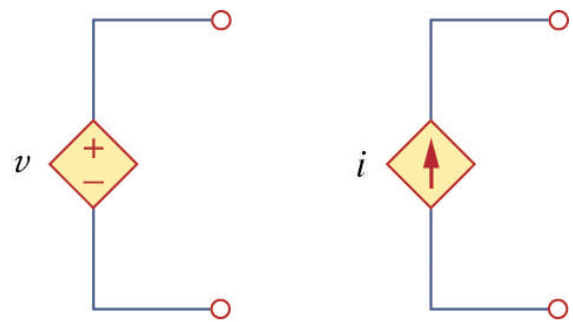


dependent current source

# Sources

- Dependent sources are useful for modeling elements such as transistors, operational amplifiers, and integrated circuits.

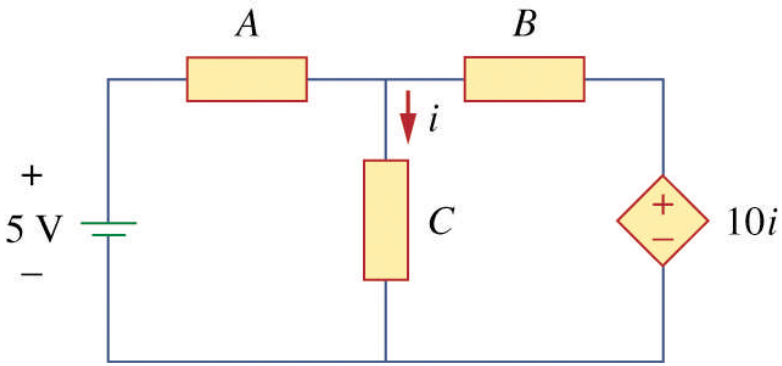


current-controlled voltage source

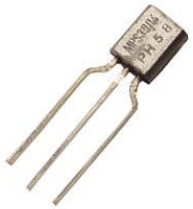

power transistor

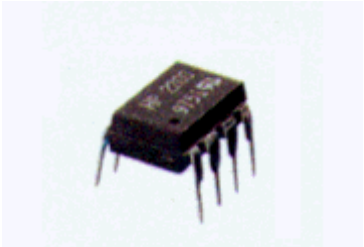

741 operational amplifier (opamp)

LM555 timer integrated circuit (IC)

# Example Problem 2

Calculate the power supplied or absorbed by each element in the circuit below.

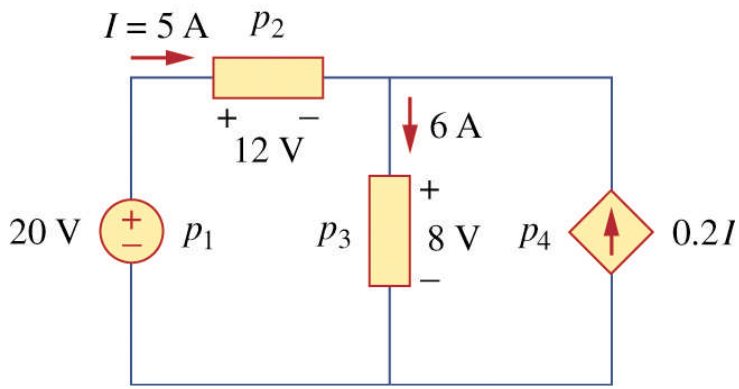

# Circuit analysis

- An **electric circuit** is an interconnection of electrical elements.

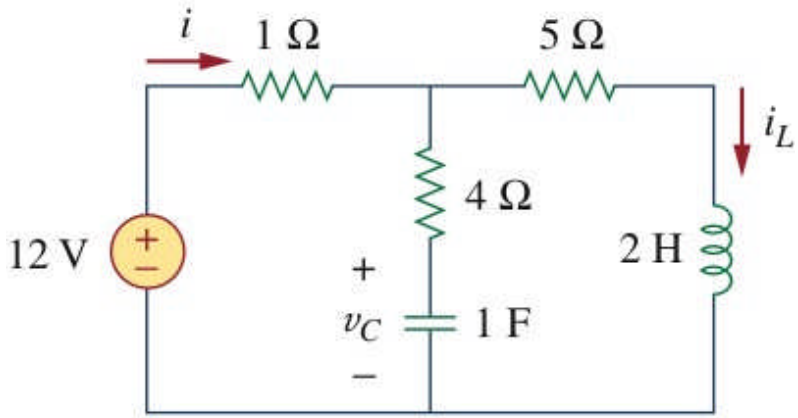


- **Circuit analysis** is the process of determining the voltages across and currents through elements of the circuit.

# Circuit analysis toolbox

**Circuit analysis toolbox**