Lesson 20:
AC Circuit Analysis 1

Impedances of passive elements

TABLE 9.3

Impedances and admittances of passive elements.

Element	Impedance	Admittance
R	$\mathbf{Z} = R$	$\mathbf{Y} = \frac{1}{R}$
L	$\mathbf{Z} = j\omega L$	$\mathbf{Y} = \frac{1}{j\omega L}$
C	$\mathbf{Z} = \frac{1}{j\omega C}$	$\mathbf{Y} = j\omega C$

The tools still work with impedance

Ohm's law

Series resistance

Voltage divider rule

Norton's theorem

Nodal analysis

Thévenin's theorem

KVL

Meters

KCL

Parallel resistance

Current divider

Source transformation

Circuit analysis toolbox

Steps in analyzing AC circuits

1. Transform the circuit to the phasor domain.
2. Solve the problem using circuit analysis techniques (nodal, superposition, etc.).
3. Transform the resulting phasor to the time domain.

Nodal analysis review

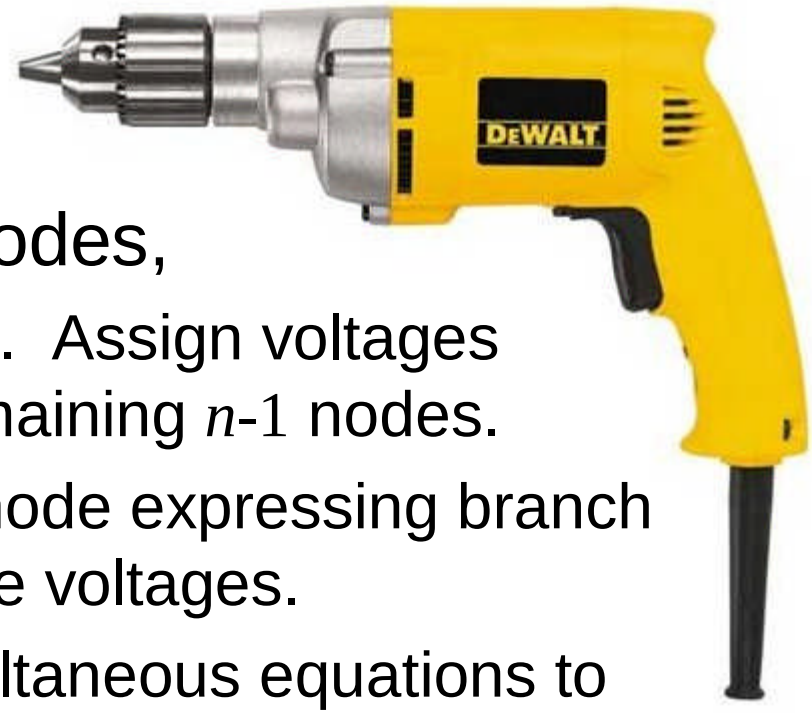

- Given a circuit with n nodes,
  1. Select a reference node. Assign voltages $\mathbf{V}_1, \mathbf{V}_2, \ldots, \mathbf{V}_{n-1}$ to the remaining n-1 nodes.
  2. Apply KCL to each n-1 node expressing branch currents in terms of node voltages.
  3. Solve the resulting simultaneous equations to obtain unknown node voltages.

Example Problem 1

Find i_x using nodal analysis.

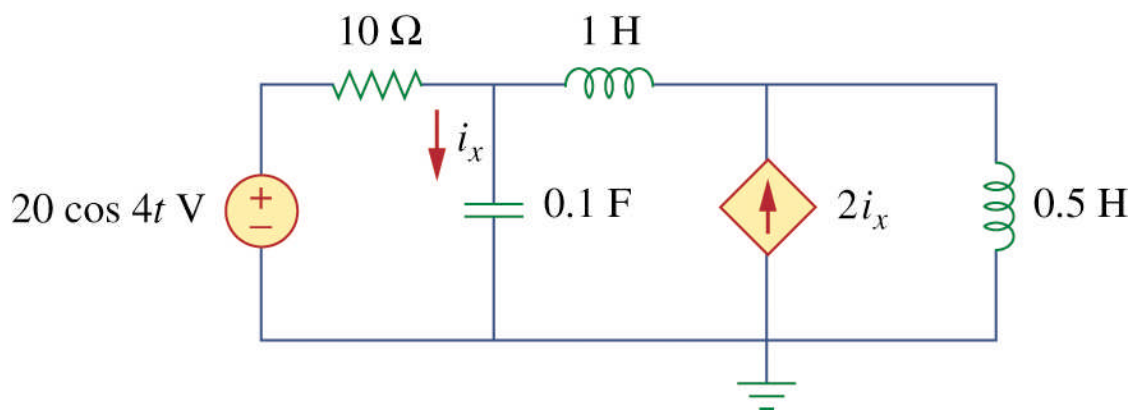

Example Problem 2

Compute $\mathbf{V}_1$ and $\mathbf{V}_2$.

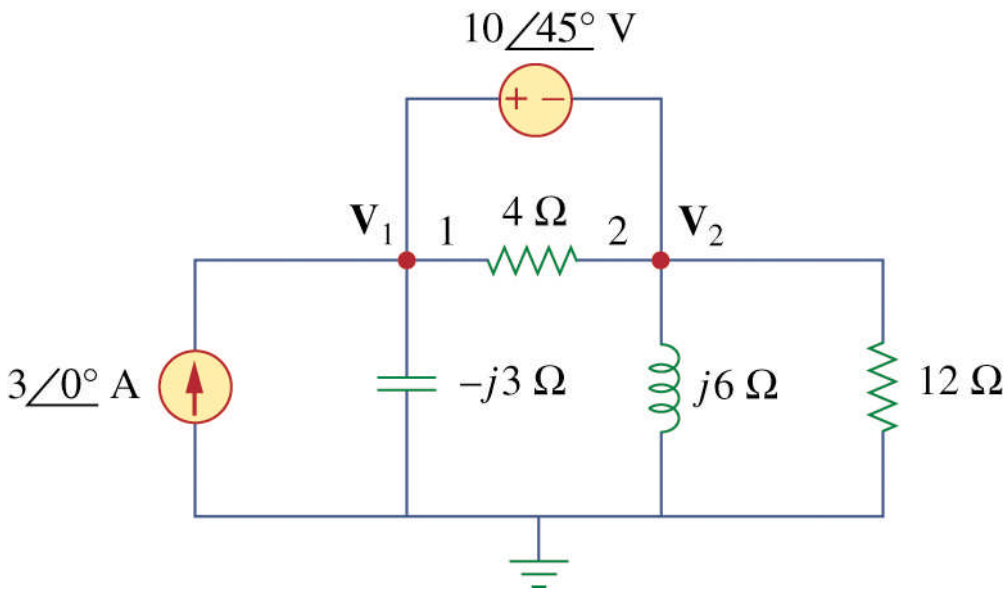

Source transformation

- **Source transformation** is the process of replacing a voltage source $\mathbf{V}_s$ in series with an impedance $\mathbf{Z}_s$ by a current source $\mathbf{I}_s$ in parallel with an impedance $\mathbf{Z}_s$, or vice versa.

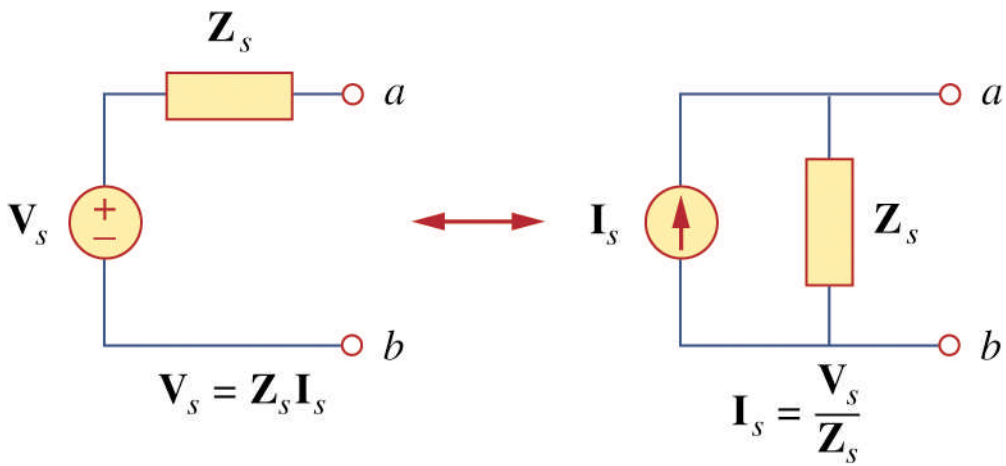

Example Problem 3

Calculate $\mathbf{V}_x$ using the method of source transformation.

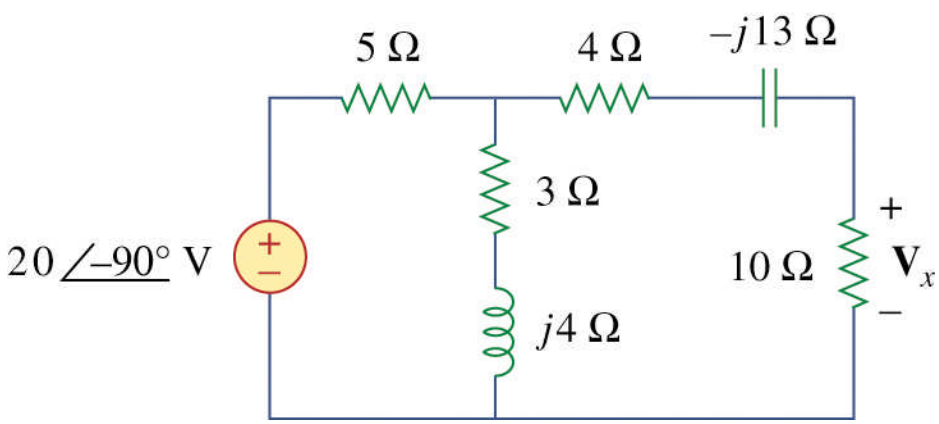

Thévenin's theorem

Thévenin's theorem states that a linear two-terminal circuit can be replaced by an equivalent circuit consisting of a voltage source $\mathbf{V}_{Th}$ in series with a resistor $\mathbf{Z}_{Th}$ where

- $\mathbf{V}_{Th}$ is the open circuit voltage at the terminals,
- $\mathbf{Z}_{Th}$ is the equivalent resistance at the

dependent sources are turned

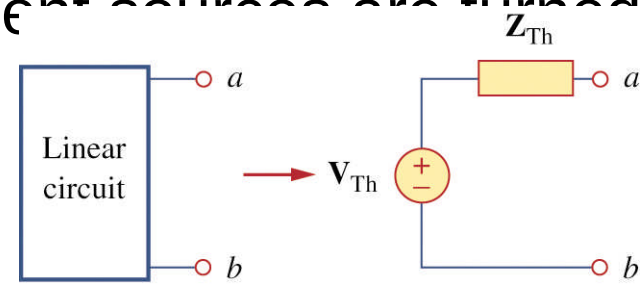

Norton's theorem

Norton's theorem states that a linear two-terminal circuit can be replaced by an equivalent circuit consisting of a current source $\mathbf{I}_N$ in series with a resistor $\mathbf{Z}_N$ where

- $\mathbf{I}_N$ is the short circuit current at the terminals,
- $\mathbf{Z}_N$ is the equivalent resistance at the terminals

nt sources are turned

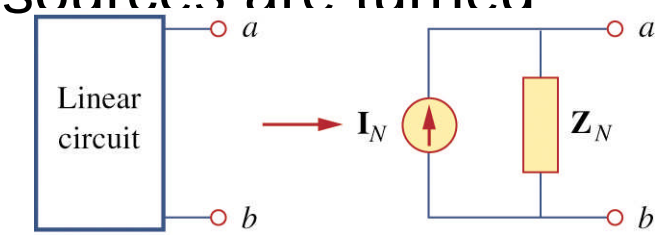

$$\mathbf{V}_{\mathrm{Th}} = \mathbf{Z}_N \mathbf{I}_N, \quad \mathbf{Z}_{\mathrm{Th}} = \mathbf{Z}_N$$

Example Problem 4

Obtain the Thévenin equivalent at terminals *a*-*b*.

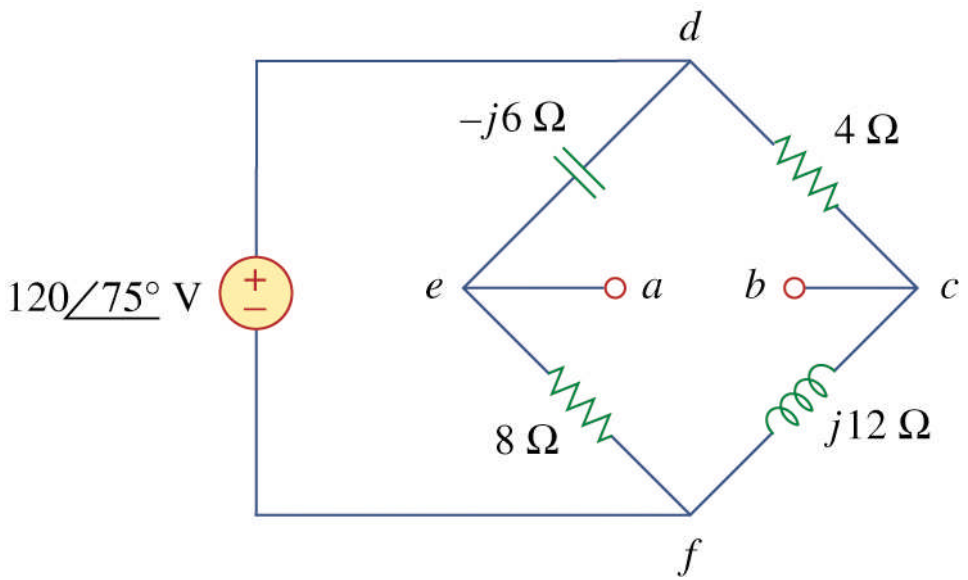

Example Problem 5
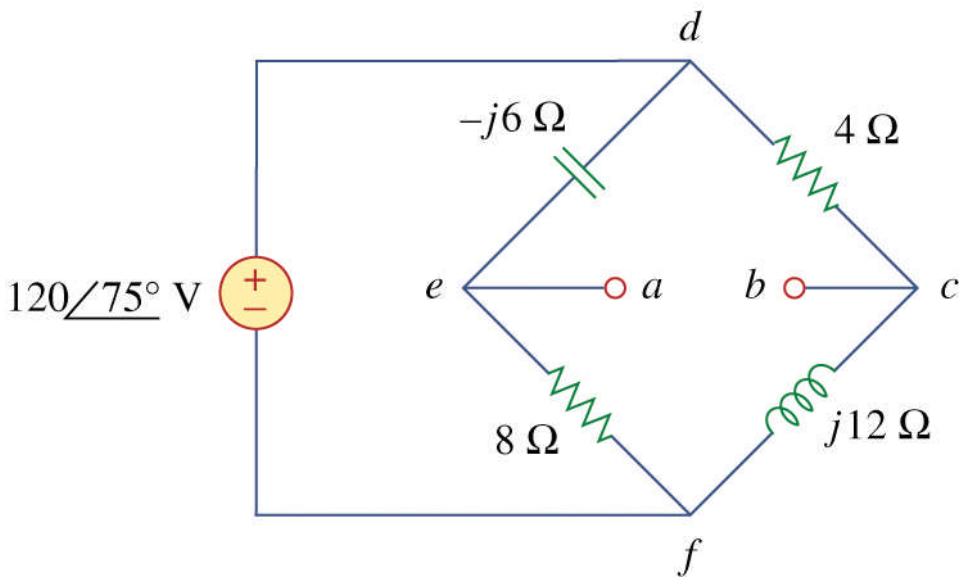
Obtain the Norton equivalent at terminals *a*-*b*.
(note: same circuit as Problem 4)