Lesson 26: Transformers 2

Transformer summary

$$\frac{N_2}{N_1} = n \qquad \frac{\mathbf{V}_2}{\mathbf{V}_1} = n \qquad \frac{\mathbf{I}_2}{\mathbf{I}_1} = \frac{1}{n}$$

$$\mathbf{Z}_R = \frac{1}{n^2}\mathbf{Z}_\mathrm{L}$$

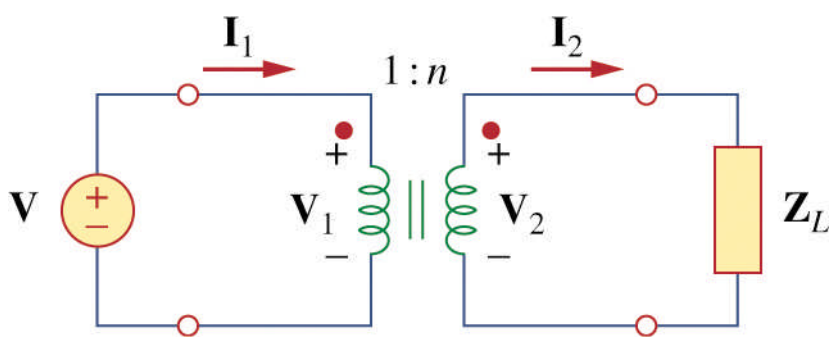

Multiple transformers

- How do we handle multiple transformers?

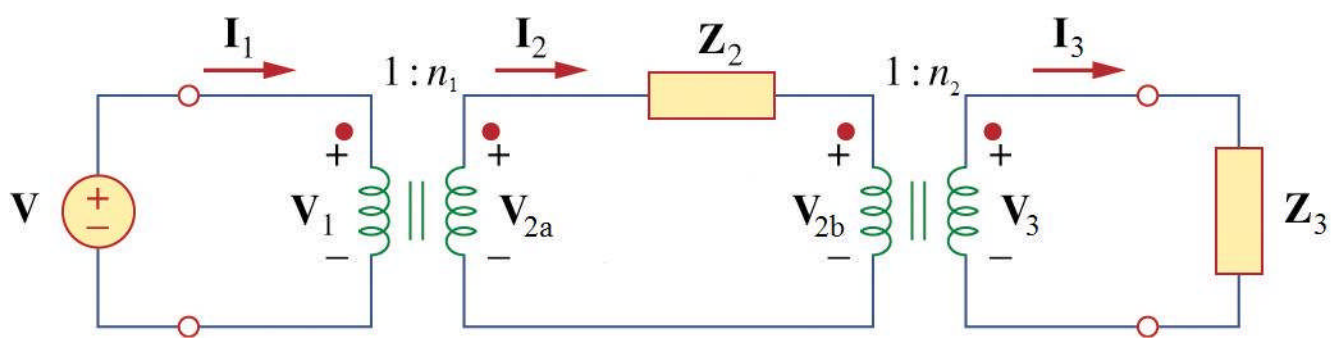

Multiple transformers

- Using reflected impedance, collapse the circuit from right to left.

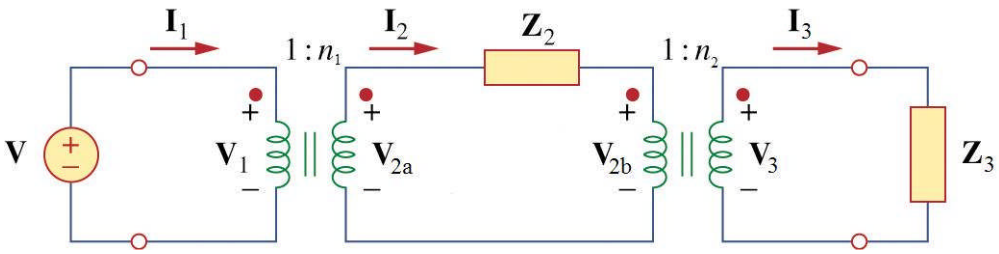

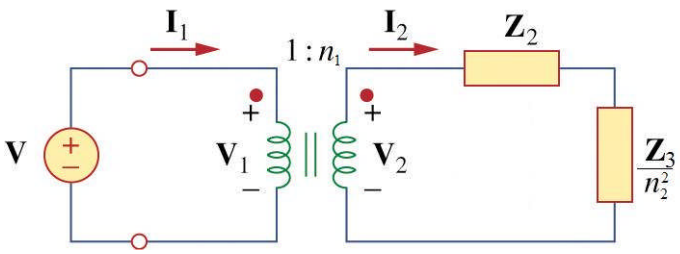

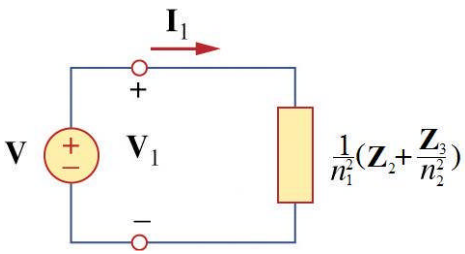

$$\mathbf{Z} = \frac{1}{n_1^2}\left(\mathbf{Z}_2 + \frac{\mathbf{Z}_3}{n_2^2}\right) = \frac{\mathbf{Z}_2}{n_1^2} + \frac{\mathbf{Z}_3}{n_1^2 n_2^2}$$

Example Problem 1

Calculate the input impedance $\mathbf{Z}_{in}$ for the network below.

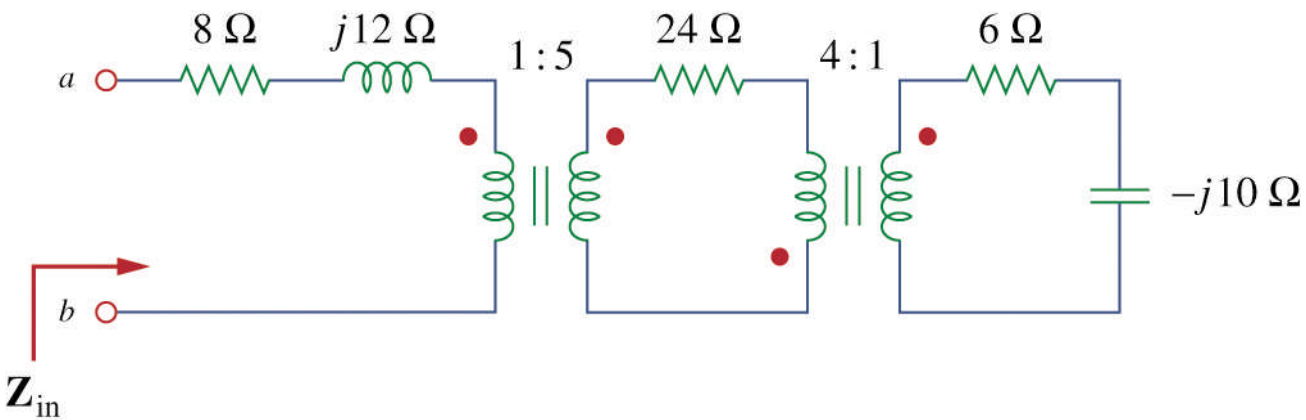

Multiple transformers and power

- How do calculate the complex power for loads $\mathbf{Z}_2$ and $\mathbf{Z}_3$?

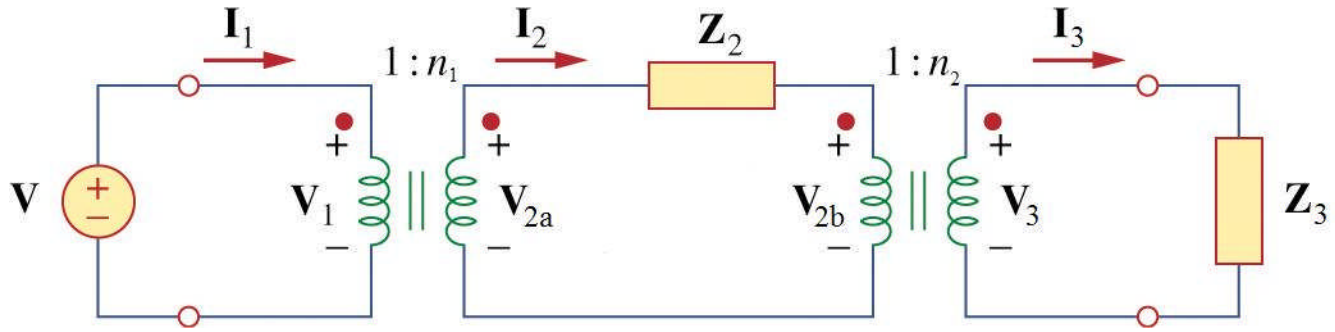

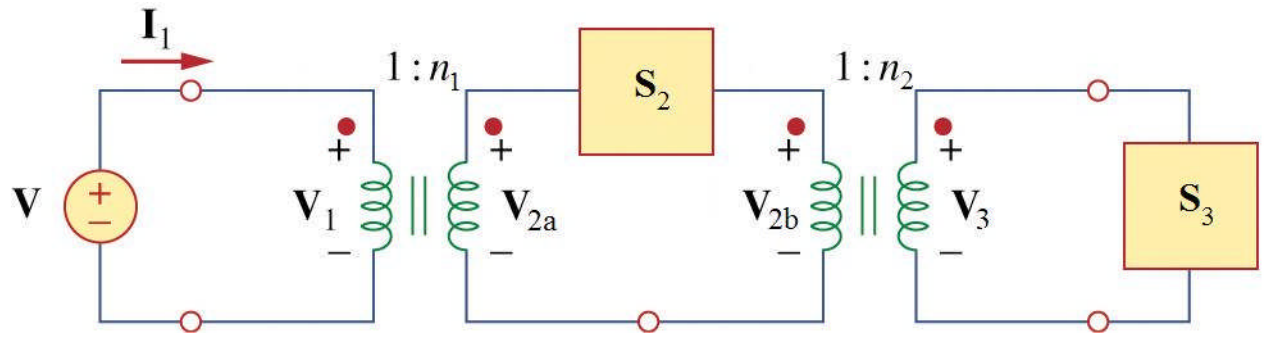

Multiple transformers and power

- Previously we determined that

$$\mathbf{Z} = \frac{1}{n_1^2}\left(\mathbf{Z}_2 + \frac{\mathbf{Z}_3}{n_2^2}\right) = \frac{\mathbf{Z}_2}{n_1^2} + \frac{\mathbf{Z}_3}{n_1^2 n_2^2}$$

- Redrawing the circuit, we see that $\mathbf{S}_1$ and $\mathbf{S}_2$ are the same power to the reflected versions of $\mathbf{Z}_2$ and $\mathbf{Z}_3$.

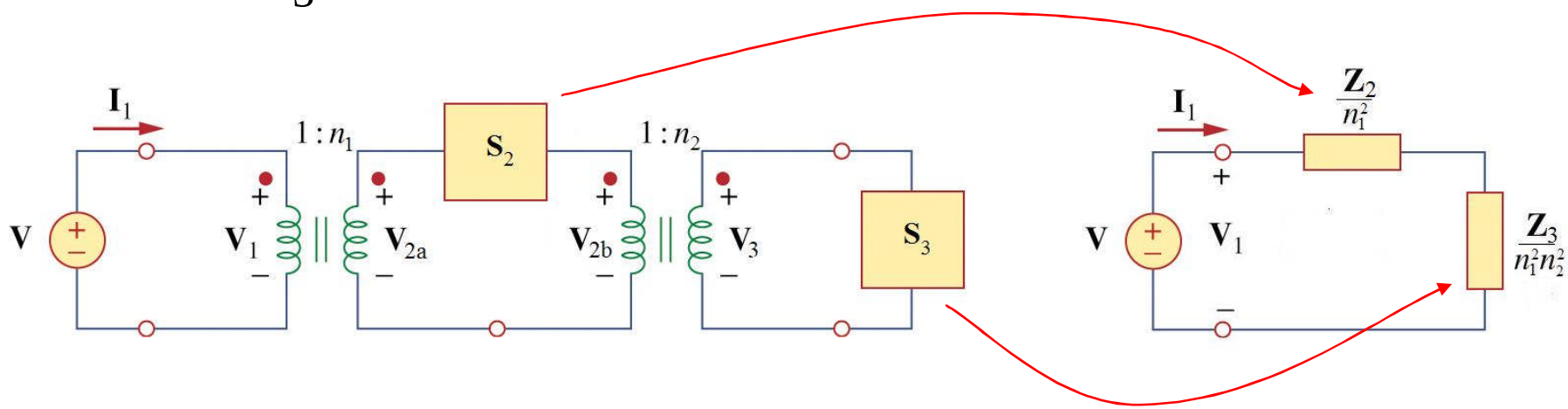

Example Problem 2

Determine the complex power delivered to each element.

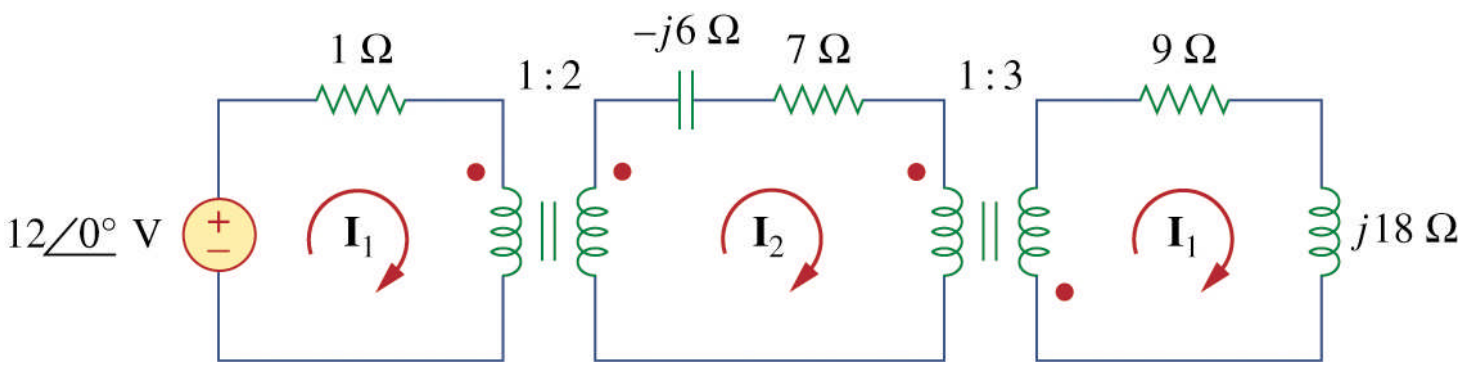

Transformer applications

- We have discussed the use of transformers in power transmission.
  - Transformer efficiencies of 95% are common and 99% is achievable.
- Other important applications of transformers are
  - Electrical isolation
  - Impedance matching
  - Frequency selective circuits

Electrical isolation

- Electrical isolation exists between devices when there is no physical connection between them.
- Transformers are used in power supplies that convert ac to dc.
  - First, they step up/down voltage for the rectifier.
  - Second, they provide electrical isolation reducing the risk of shock hazard.

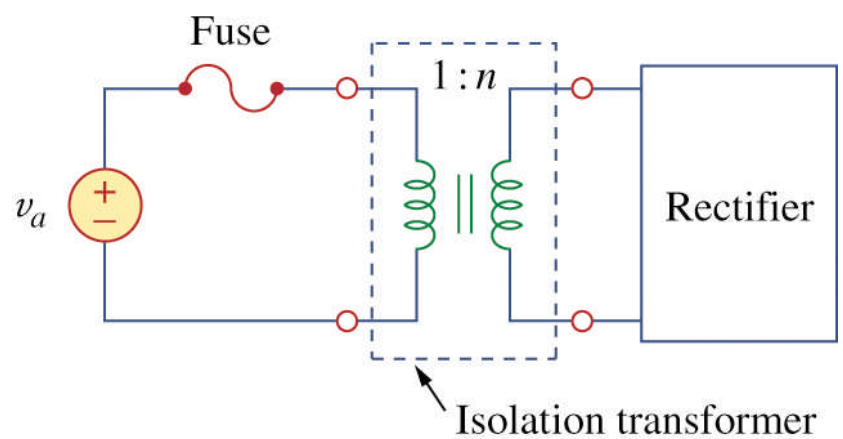

Electrical isolation

- Transformers also provide dc isolation between two amplifier stages.

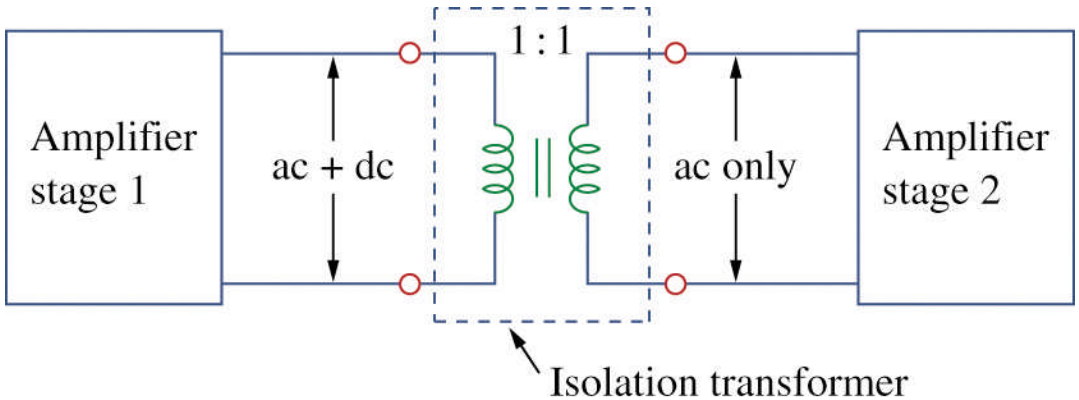

- Magnetic coupling does not occur with a dc voltage (no rate of change of voltage means no induced emf)

Electrical isolation

- Consider the following

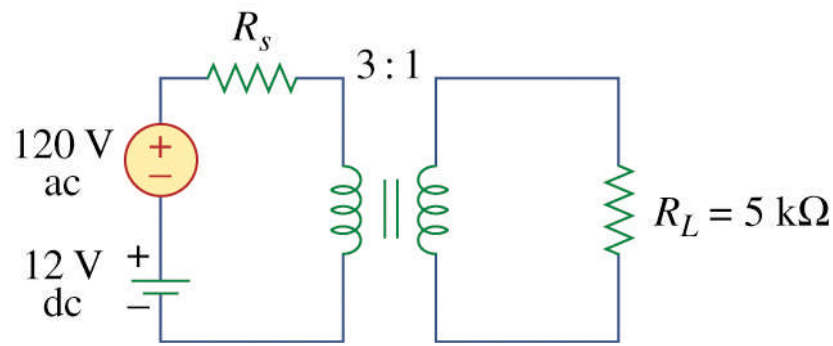

- Using superposition, we can evaluate the AC and DC cases separately.

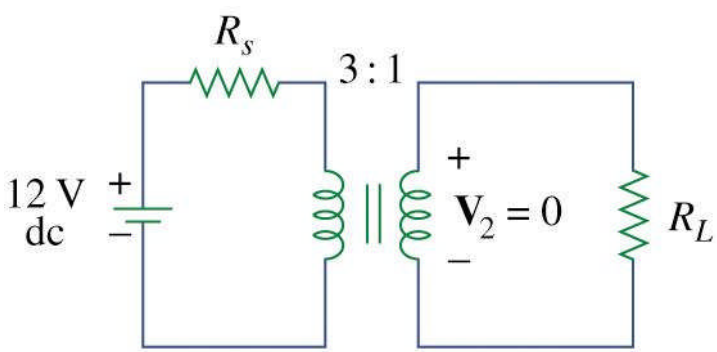

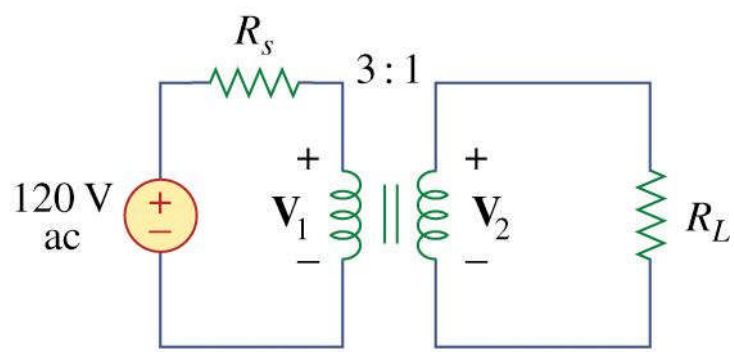

Impedance matching

- Recall that for maximum power transfer, the load resistance R_L must be matched with the source resistance R_S.

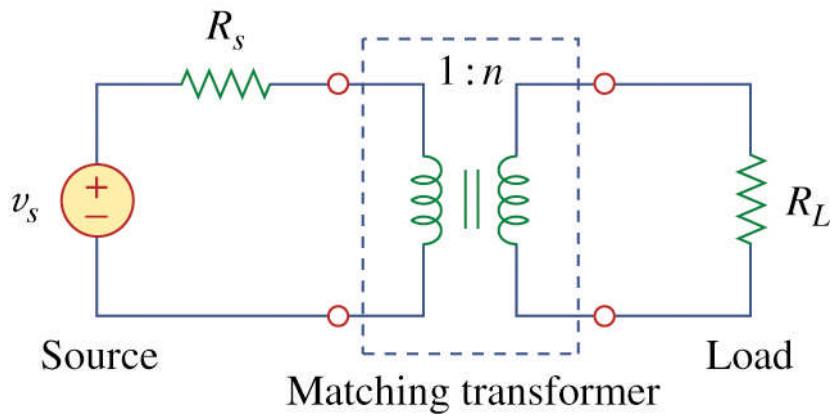

- In most cases the two resistances are mot matched, however a transformer can be used to achieve impedance matching.

Example Problem 3
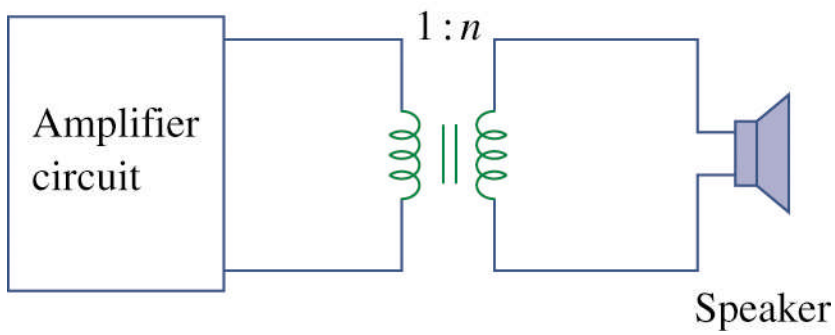
A common application of impedance matching transformers is in audio amplifiers. Consider the following case of an amplifier with a Thévenin impedance of 192-Ω. To achieve max power transfer with a 12-Ω speaker, what the required turns ratio of the matching transformer?