Lesson 27: 3-Phase Circuit Analysis 1

Complex power (review)

- Determine the power (P, Q, and $\mathbf{S}$) by load $\mathbf{Z}$.

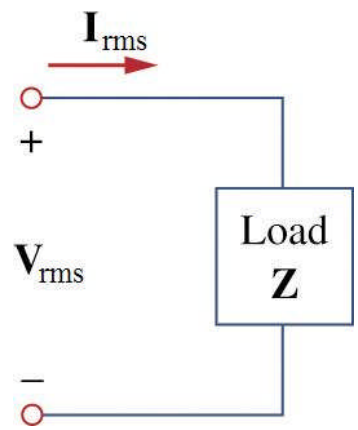

Complex power (review)

$$\mathbf{S} = \mathbf{V}_{\text{rms}}\mathbf{I}^*_{\text{rms}} = V_{\text{rms}} I_{\text{rms}} \angle(\theta_v - \theta_i) = \frac{V^2_{\text{rms}}}{\mathbf{Z}^*} = I^2_{\text{rms}}\mathbf{Z}$$

$$\mathbf{S} = S\angle\theta = P + jQ$$

$$P = \text{Re}(\mathbf{S}) = I^2_{\text{rms}} R$$

$$Q = \text{Im}(\mathbf{S}) = I^2_{\text{rms}} X$$

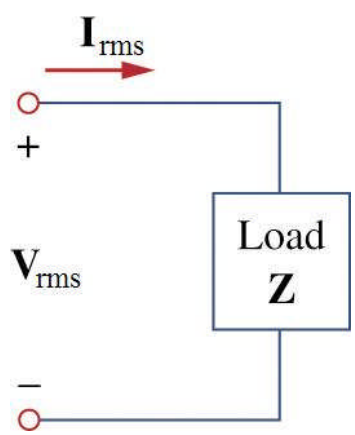

Single-phase system (2-wire)

- A single-phase ac power system consists of a generator connected through a pair of wires (transmission line) to a load.
  - V_P is the magnitude of the source voltage given in RMS (the subscript P is for phase, not peak).
  - ϕ is the phase.
  - This is a **two-wire** system.

Single-phase system (3-wire)

- A three-wire single-phase system consists of two identical sources (equal magnitude and phase) connected to two loads by two outer wires and a neutral.
  - This is typical of power supplied to houses.

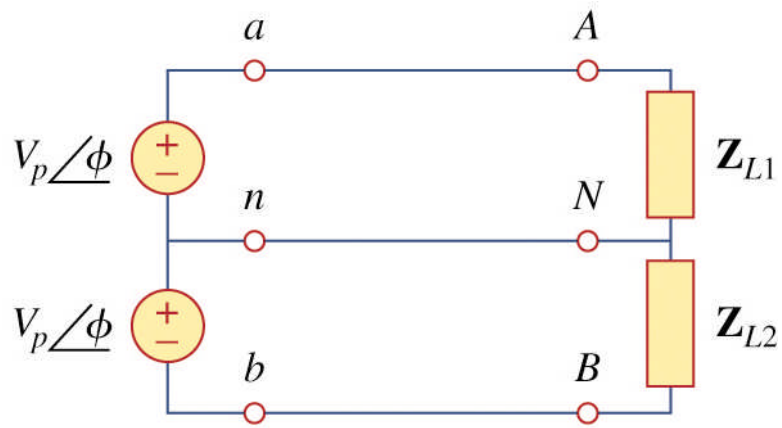

Three-phase system (4-wire)

- A three-phase system is produced by three sources with the same amplitude and frequency but separated in phase by 120°.

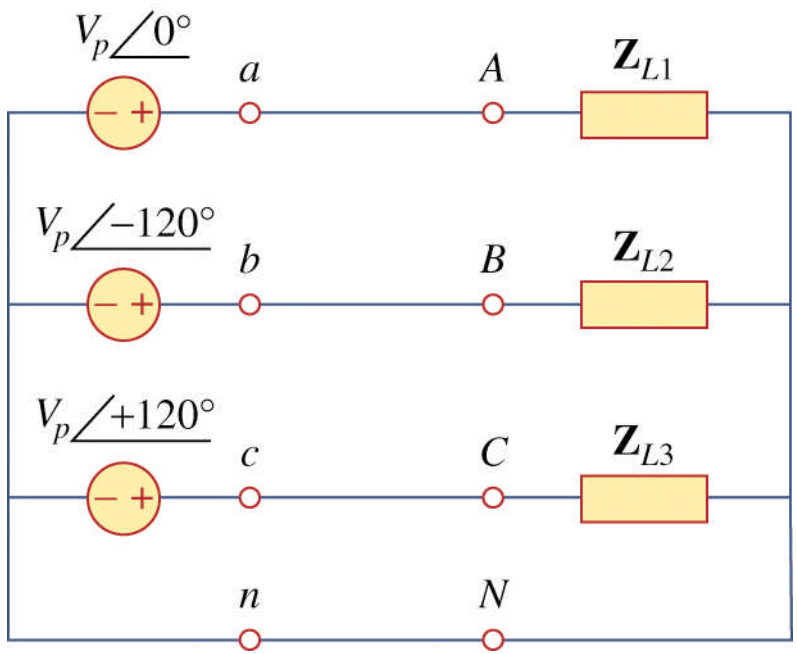

Why three-phase?

1. Nearly all power generated and distributed is 3-phase, 60 Hz (or 50 Hz outside the U.S.).
   - When single phase is needed, it can simply be taken from one of the three phases.
2. The instantaneous power in 3-phase system can be constant (not pulsating).
   - Results in less vibration in 3-phase machines.
3. Three phase systems are more economical that single.
   - Amount of wire needed is less than single phase.

Balanced three-phase voltages

- Three-phase voltages are produced by a three-phase ac generator (or alternator).
- The stator contains 3 windings (a-a', b-b', c-c') physically separated by 120°.

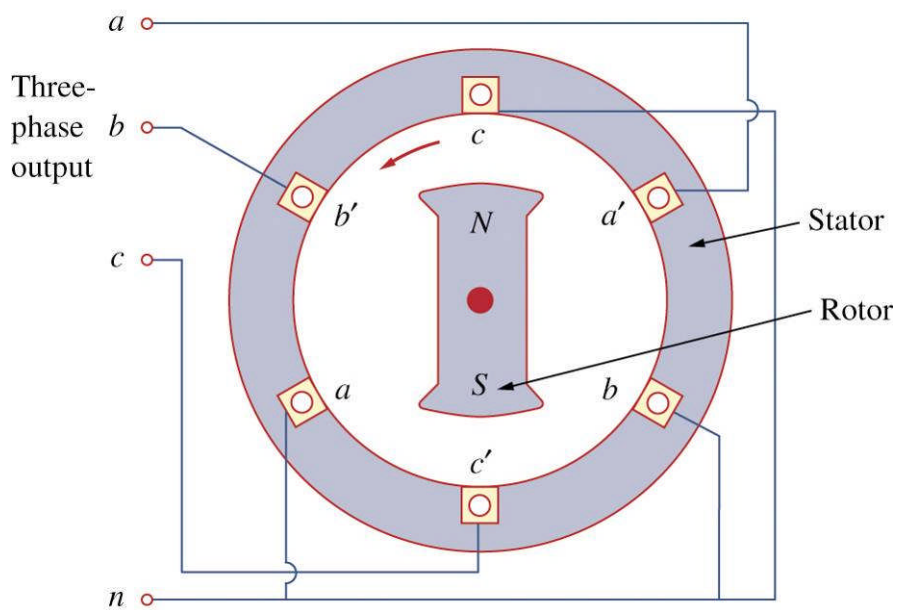

Balanced three-phase voltages

- The voltages induced in the windings are equal in magnitude but out of phase by 120°.
- The voltages $\mathbf{V}_{an}$, $\mathbf{V}_{bn}$, and $\mathbf{V}_{cn}$ are between lines a, b and c and the neutral line n.
  - These are called **phase voltages**.

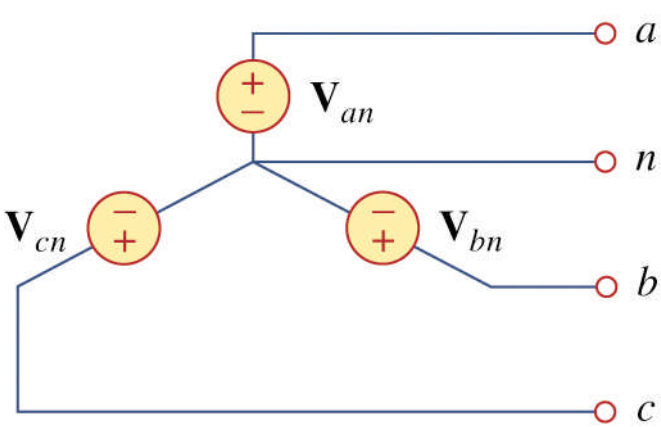

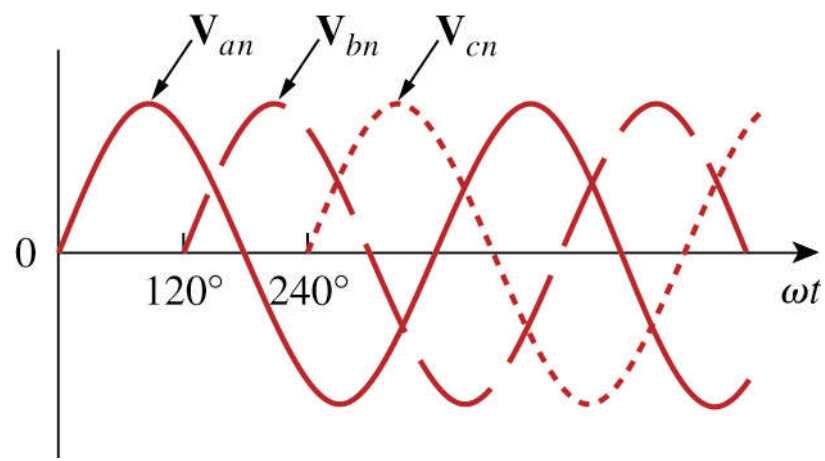

Balanced three-phase voltages

- If the voltages are equal in magnitude but out of phase by 120° they are said to be balanced.
- This implies

$$\mathbf{V}_{an} + \mathbf{V}_{bn} + \mathbf{V}_{cn} = 0$$

$$|\mathbf{V}_{an}| = |\mathbf{V}_{bn}| = |\mathbf{V}_{cn}|$$

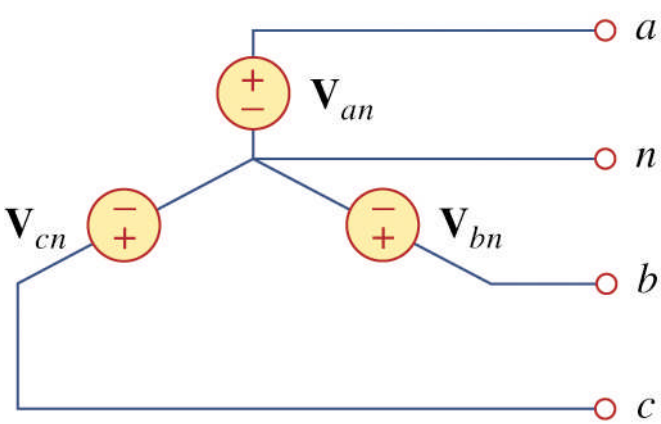

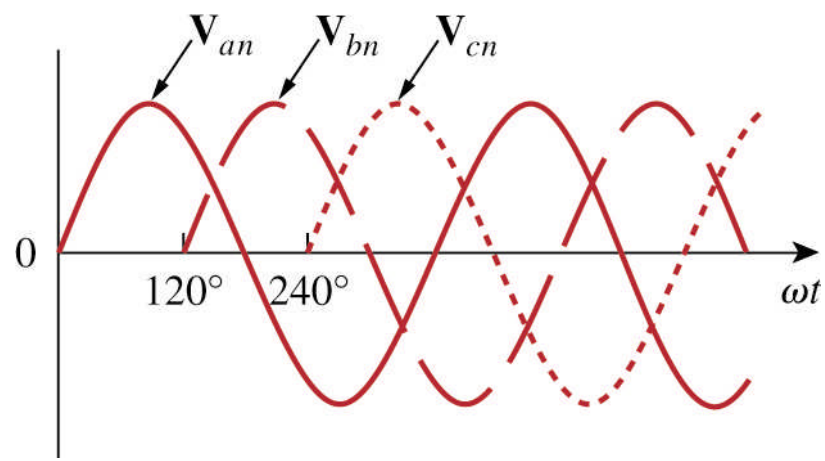

Positive phase sequence (abc)

- The abc sequence or positive sequence.
  - Note: V_P is the rms value of the phase voltage.

$$\mathbf{V}_{an} = V_P \angle 0^\circ$$
$$\mathbf{V}_{bn} = V_P \angle -120^\circ$$
$$\mathbf{V}_{cn} = V_P \angle -240^\circ = V_P \angle +120^\circ$$

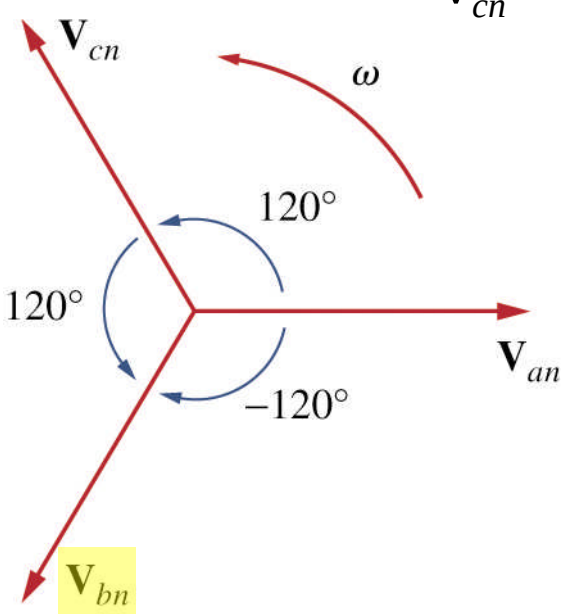

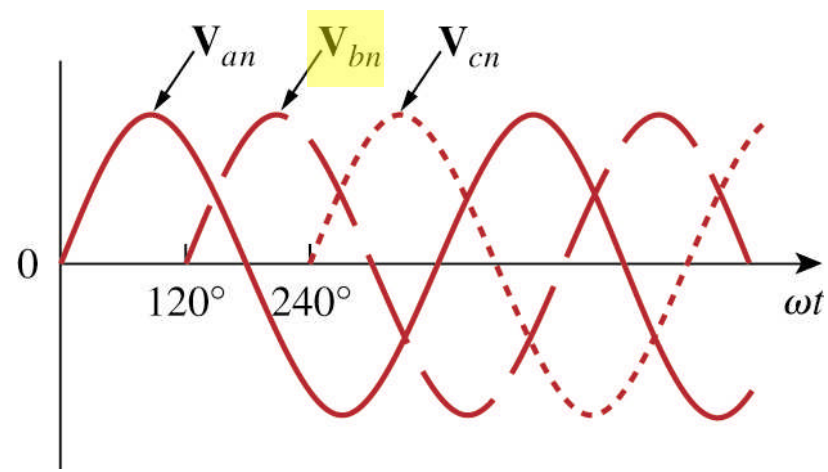

Negative phase sequence (*acb*)

- The *acb* or negative sequence is produced when the generator rotates counterclockwise.

$$\mathbf{V}_{an} = V_P \angle 0^\circ$$
$$\mathbf{V}_{cn} = V_P \angle -120^\circ$$
$$\mathbf{V}_{bn} = V_P \angle -240^\circ = V_P \angle +120^\circ$$

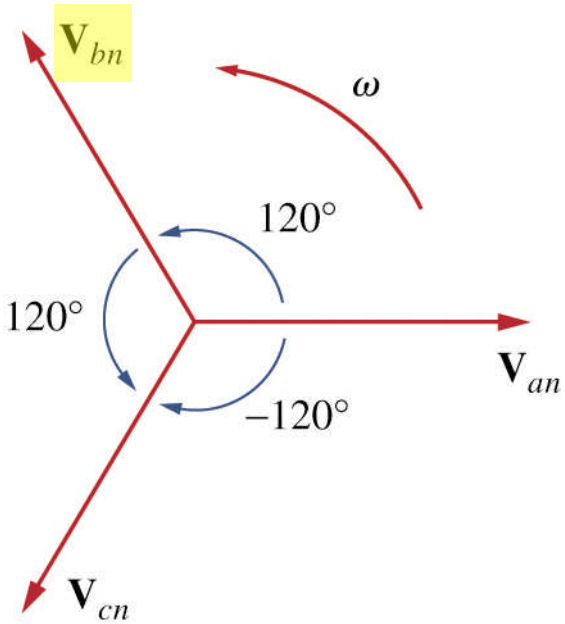

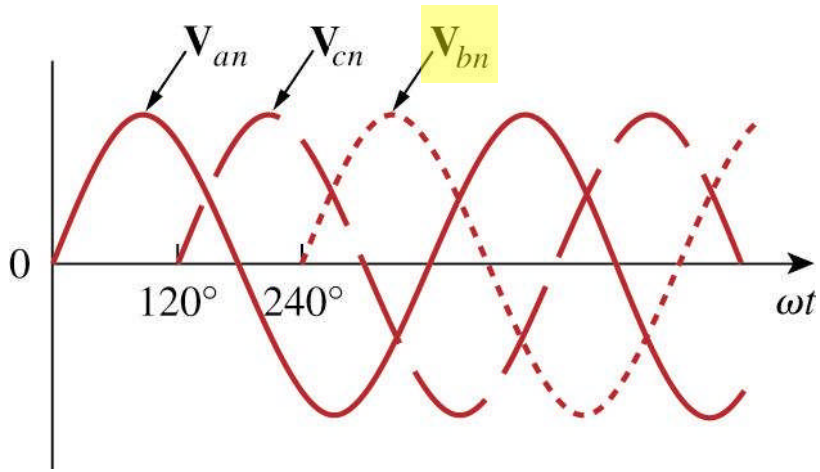

Phase sequence

- The phase sequence is the time order in which the voltages pass through their respective maximum values.
- Phase sequence is important because it determines the direction of rotation of a connected motor.

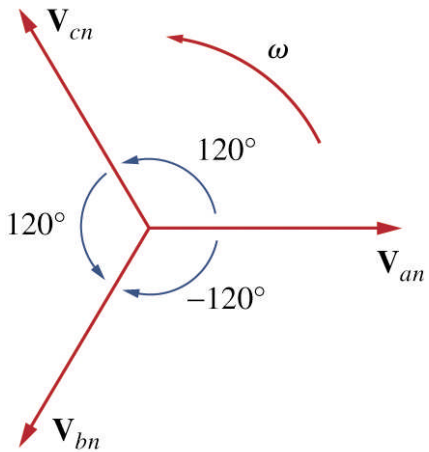

abc sequence

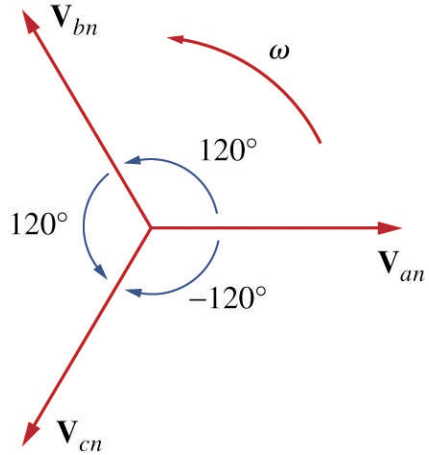

acb sequence

Three-phase loads

- Three-phase loads can be either wye-connected or delta-connected.
- Loads are said to be **balanced** if phase impedances ($\mathbf{Z}_1$, $\mathbf{Z}_2$, $\mathbf{Z}_3$ or $\mathbf{Z}_a$, $\mathbf{Z}_b$, $\mathbf{Z}_c$) are equal in magnitude and phase.

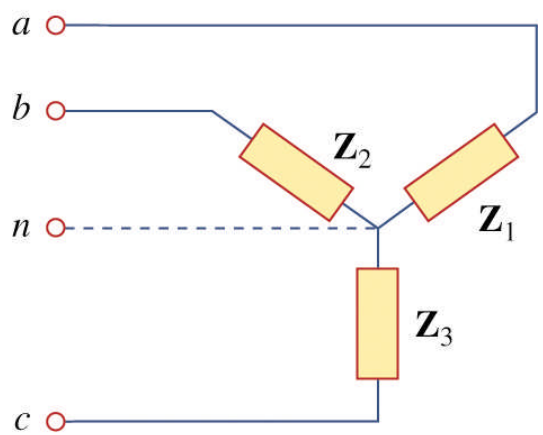

Y-connected load

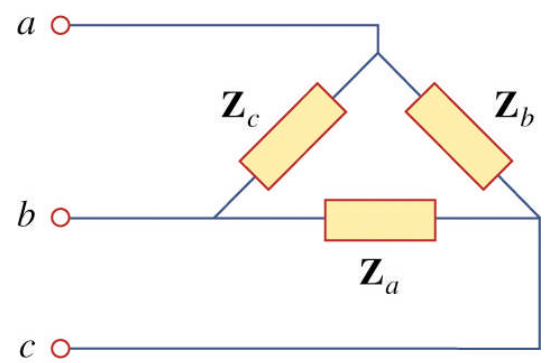

Δ-connected load

Wye-connected load

- Whether a neutral line exists depends on if it is a three or four-wire system.
- For a balanced wye-connected load

$$\mathbf{Z}_1 = \mathbf{Z}_2 = \mathbf{Z}_3 = \mathbf{Z}_Y$$

where $\mathbf{Z}_Y$ is the load per phase.

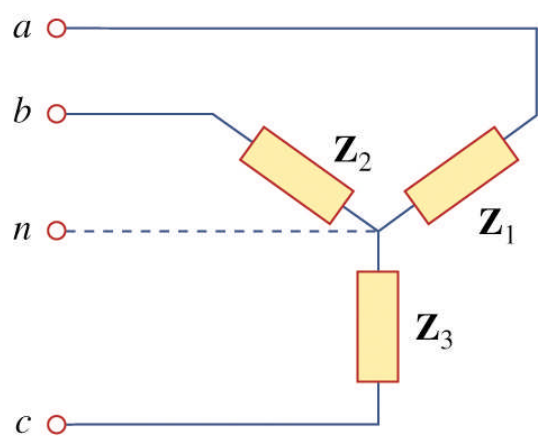

Delta-connected load

- A neutral line cannot exist in a Δ-connected load.
- For a balanced Δ-connected load

$$\mathbf{Z}_a = \mathbf{Z}_b = \mathbf{Z}_c = \mathbf{Z}_\Delta$$

where $\mathbf{Z}_\Delta$ is the load per phase.

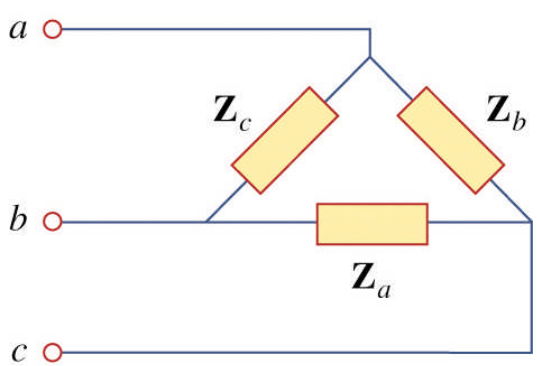

Delta-wye transformation

- How can we equate the wye- and delta-connected (balanced) loads?

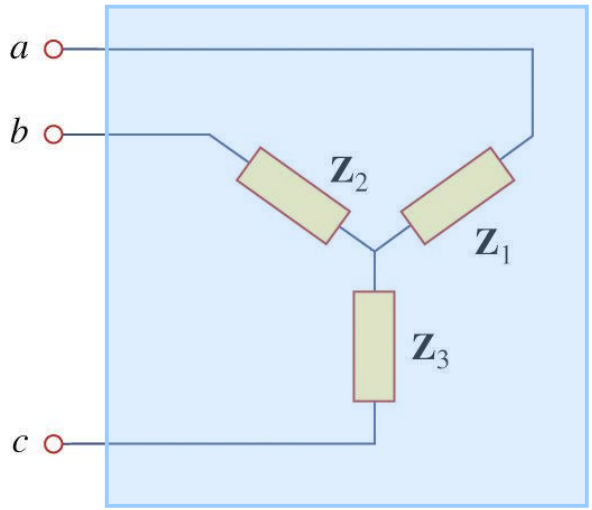

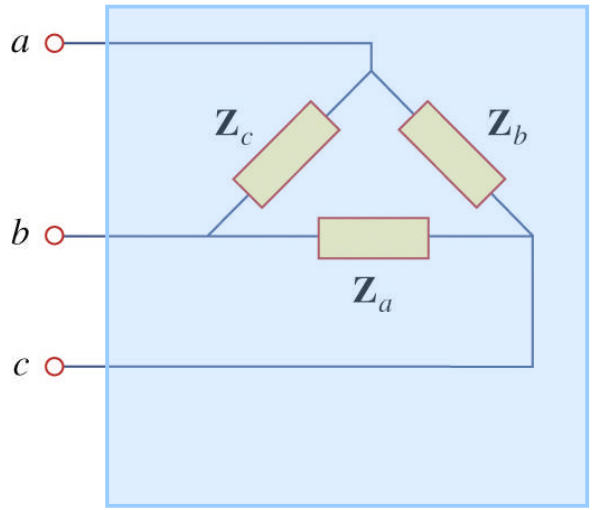

Delta-wye transformation

- For balanced loads,

$$\mathbf{Z}_\Delta = 3\mathbf{Z}_Y \quad \text{or} \quad \mathbf{Z}_Y = \frac{1}{3}\mathbf{Z}_\Delta$$

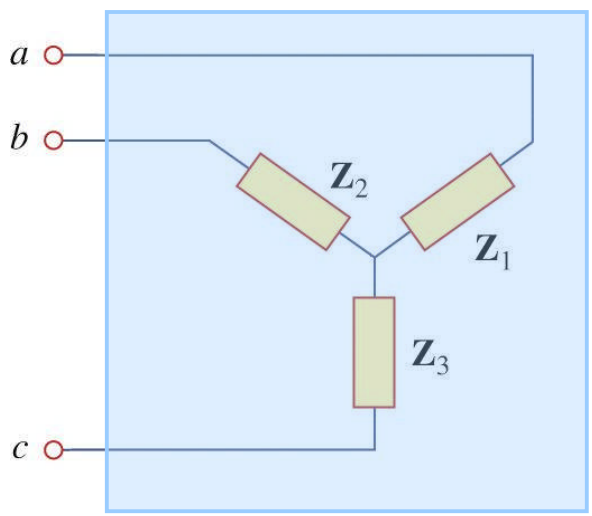

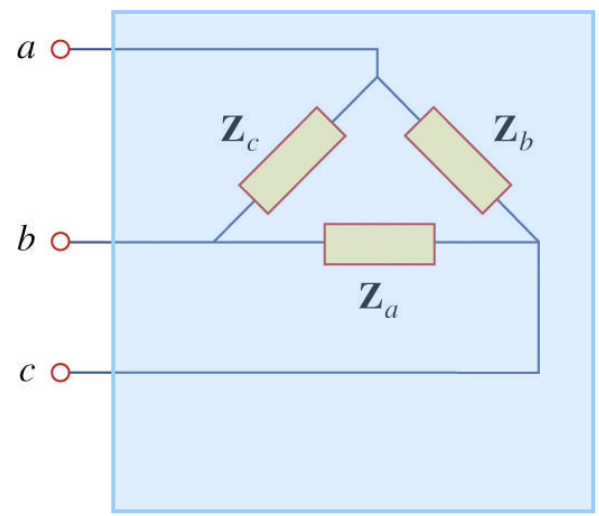

Delta-connected sources

- Sources may also be delta-connected.

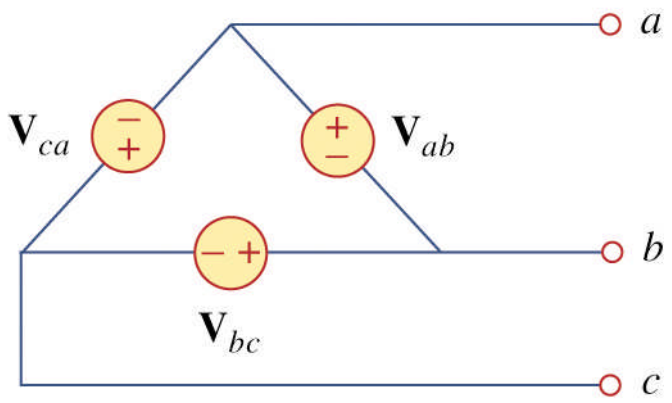

- In practice, this is rarely done because slight imbalances in the voltages result in a circulating current in the delta-mesh.

Example Problem 1

Determine the phase sequence of the set of voltages.

$$v_{an} = 200\cos(\omega t + 10°)$$
$$v_{bn} = 200\cos(\omega t - 230°)$$
$$v_{cn} = 200\cos(\omega t - 110°)$$

Three-phase systems

- Given that both loads and sources can be Y-connected and Δ-connected, we have 4 possible combinations to consider
  - Y-Y connection
  - Y-Δ connection
  - Δ-Δ connection
  - Δ-Y connection
- In reality, the most common configuration is Y-Δ.

Balanced Y-Y connection

- We will consider a four-wire Y-Y system.
- The impedance $\mathbf{Z}_Y$ can be thought of as the sum of the source, line and load impedances.

$$\mathbf{Z}_Y = \mathbf{Z}_S + \mathbf{Z}_l + \mathbf{Z}_L$$

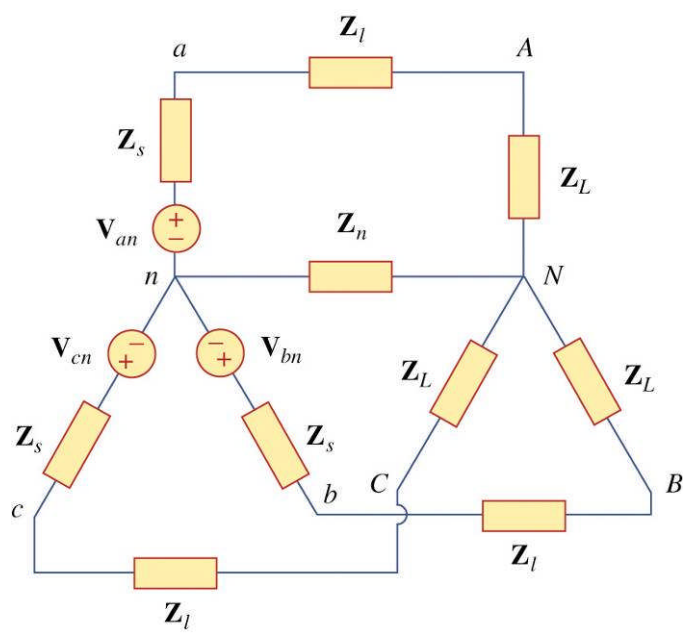

Balanced Y-Y connection

- Because $\mathbf{Z}_S$ and $\mathbf{Z}_l$ are often quite small compared to $\mathbf{Z}_L$, we will assume $\mathbf{Z}_Y = \mathbf{Z}_L$, simplifying our Y-Y system.

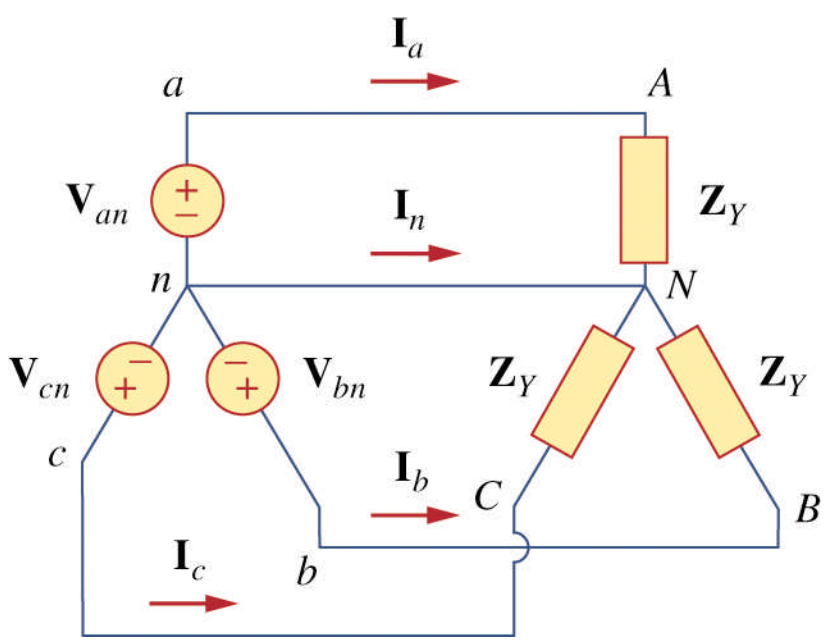

Source-load labeling convention

- Sources are labeled using lowercase letters.
- Loads are labeled using uppercase letters.

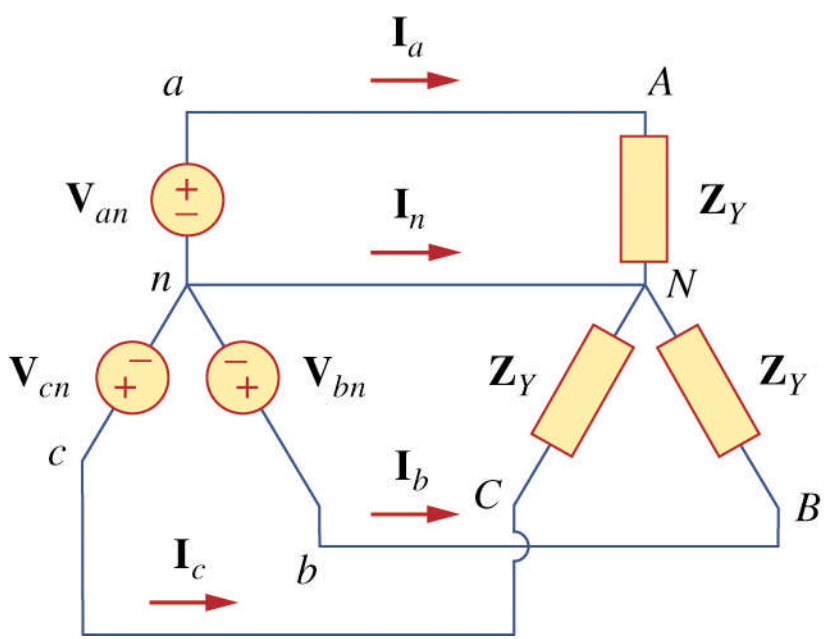

Line voltages

Line voltages

- How are the line voltages ($\mathbf{V}_{ab}$, $\mathbf{V}_{bc}$, $\mathbf{V}_{ca}$) related to the phase voltages ($\mathbf{V}_{an}$, $\mathbf{V}_{bn}$, $\mathbf{V}_{an}$) ?

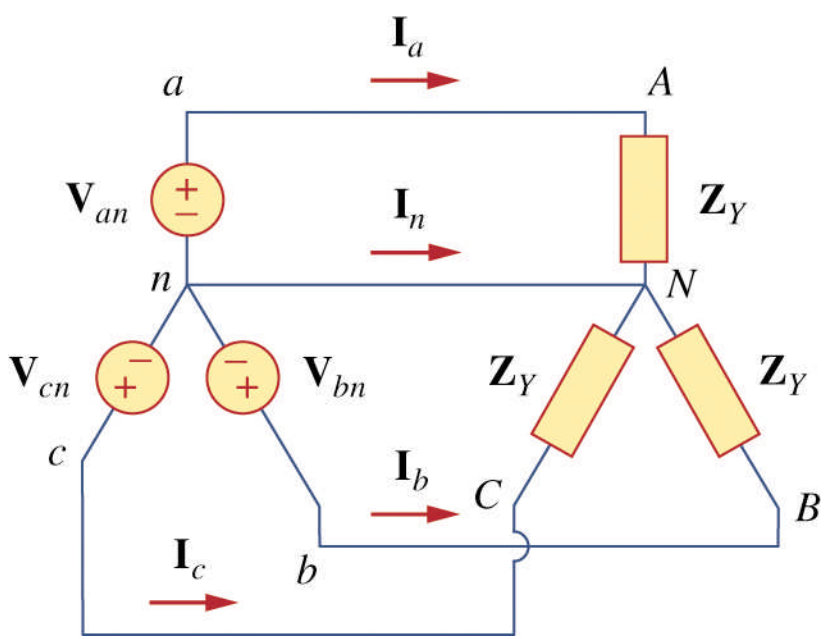

Line voltages

- Line voltage are $\sqrt{3}$ times larger and lead their respective phase voltages by 30°.

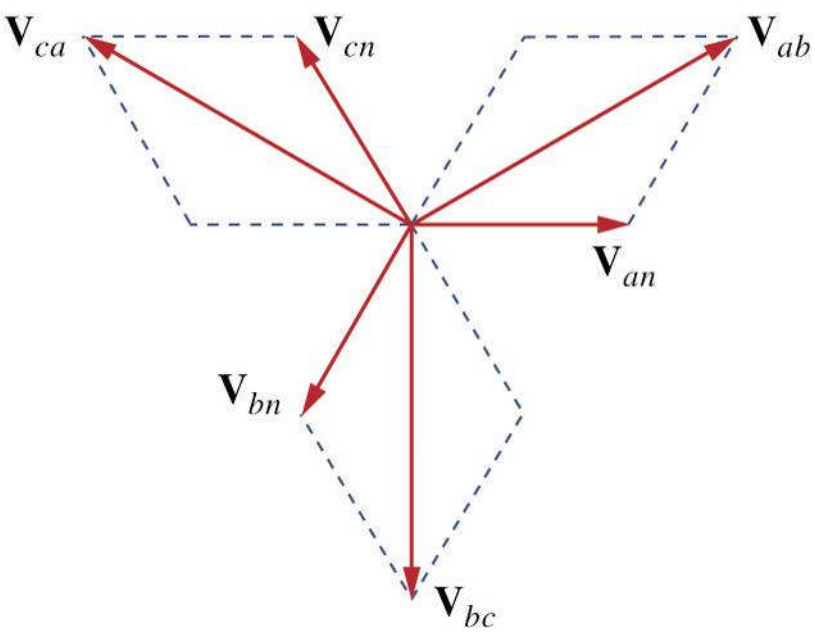

$$\mathbf{V}_{ab} = \mathbf{V}_{an} - \mathbf{V}_{bn} = \sqrt{3}V_P\angle 30°$$

$$\mathbf{V}_{bc} = \sqrt{3}V_P\angle -90°$$

$$\mathbf{V}_{ca} = \sqrt{3}V_P\angle -210°$$

Line currents

- What are the line currents ($\mathbf{I}_a$, $\mathbf{I}_b$, $\mathbf{I}_c$)?

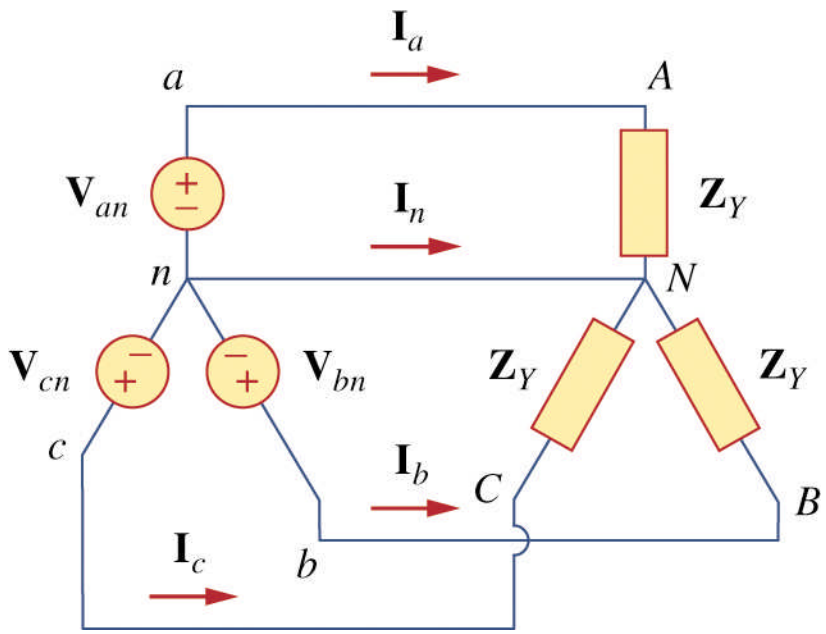

- What is the neutral line current ($\mathbf{I}_n$)?

Line currents

- Line currents are given

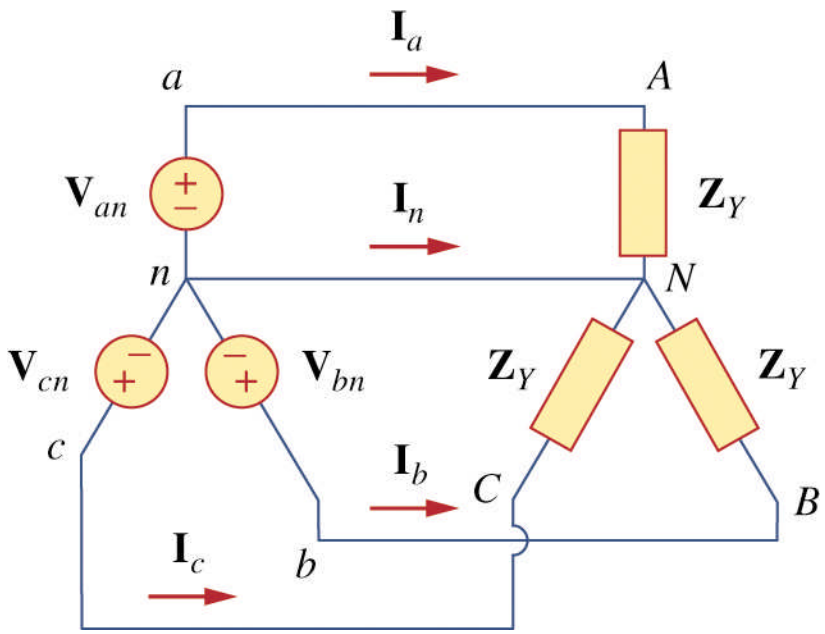

$$\mathbf{I}_a = \frac{\mathbf{V}_{an}}{\mathbf{Z}_Y}$$

$$\mathbf{I}_b = \frac{\mathbf{V}_{bn}}{\mathbf{Z}_Y} = \frac{\mathbf{V}_{an}\angle -120^\circ}{\mathbf{Z}_Y} = \mathbf{I}_a\angle -120^\circ$$

$$\mathbf{I}_c = \frac{\mathbf{V}_{cn}}{\mathbf{Z}_Y} = \frac{\mathbf{V}_{an}\angle -240^\circ}{\mathbf{Z}_Y} = \mathbf{I}_a\angle -240^\circ$$

Since $\mathbf{I}_a + \mathbf{I}_b + \mathbf{I}_c = 0$, thus $\mathbf{I}_n = 0$.

Single-phase equivalent

- In analyzing a balanced Y-Y system, it is sufficient to examine just one of the phases and apply the results to the other two phases (with appropriate phase delays).

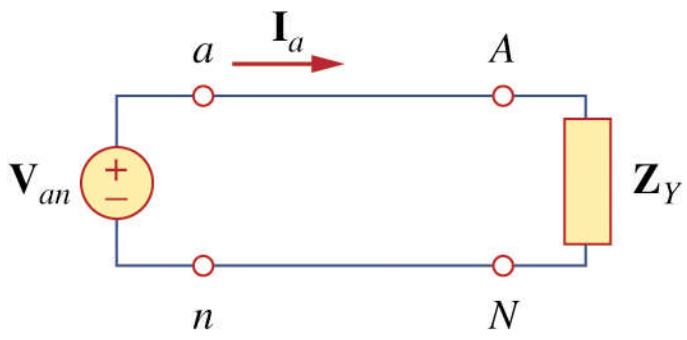

Example Problem 2
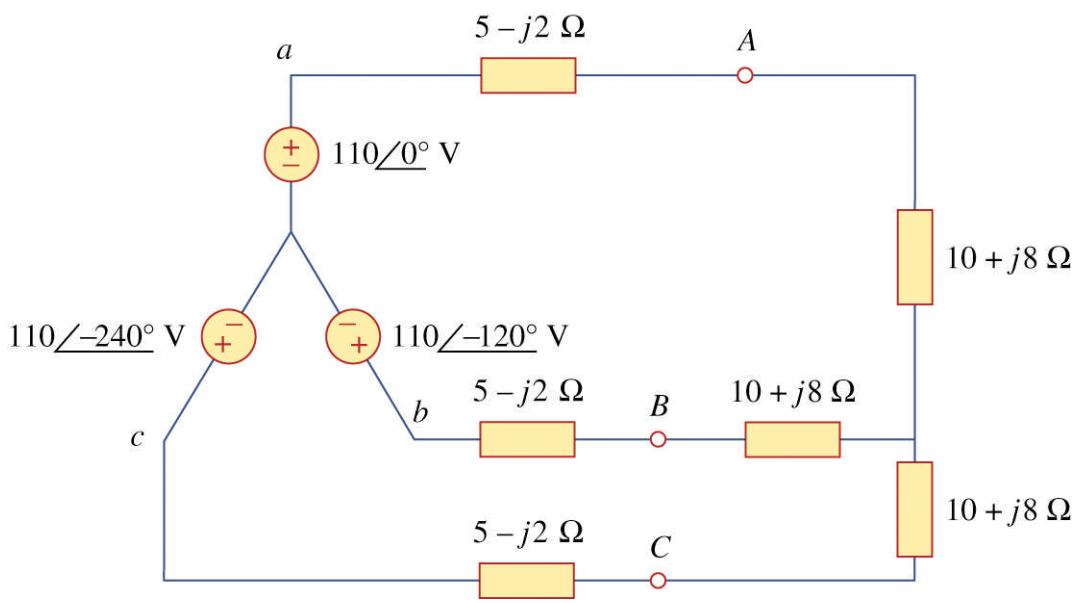
Calculate the line currents in the three-wire Y-Y system.