# Lesson 29:
# 3-Phase Power

# Three-phase power

- Objectives
  - Derive instantaneous power expression.
  - Develop expressions for total power.
  - Compare transmission power loss to single-phase.

# Instantaneous power (single-phase)

- Recall that for a single-phase ac circuit, the instantaneous power is given

$$p(t) = v(t)i(t) = V_m I_m \cos(\omega t + \theta_v)\cos(\omega t + \theta_i)$$

$$= \underbrace{\frac{1}{2} V_m I_m \cos(\theta_v - \theta_i)} + \underbrace{\frac{1}{2} V_m I_m \cos(2\omega t + \theta_v + \theta_i)}$$

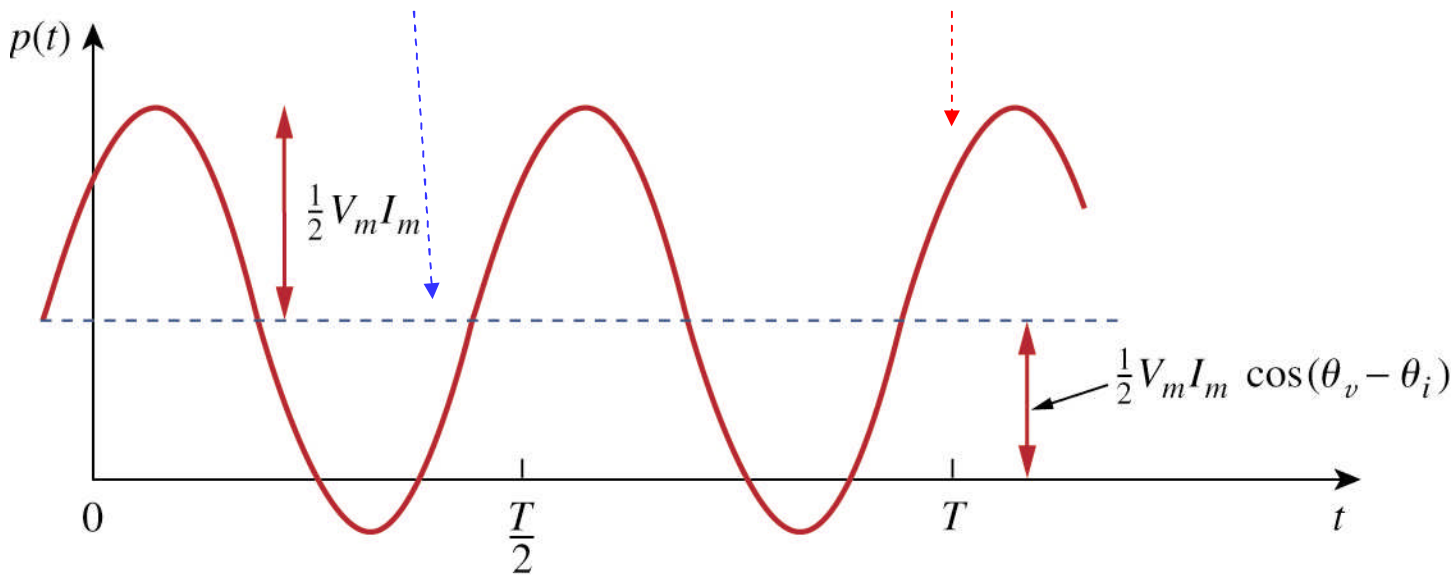

# Instantaneous power (3-phase)

- Considering the following Y-Y system, develop an expression for total *instantaneous* power delivered.

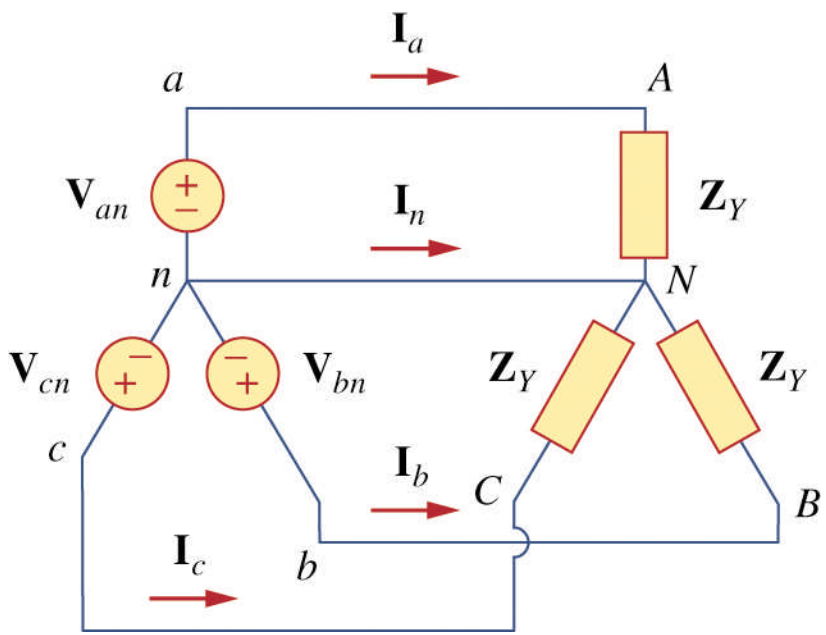


Let $\mathbf{V}_{AN} = V_p\angle 0°, \mathbf{V}_{BN} = V_p\angle -120°,\ \mathbf{V}_{CN} = V_p\angle +120°$ and $\mathbf{Z}_Y = Z\angle\theta$.

# Instantaneous power (3-phase)

- The instantaneous phase voltages are given

$$v_{AN} = \sqrt{2}V_P \cos\omega t \quad v_{BN} = \sqrt{2}V_P \cos(\omega t - 120°)$$
$$v_{CN} = \sqrt{2}V_P \cos(\omega t + 120°)$$

implying the phase currents are

$$i_a = \sqrt{2}I_P \cos(\omega t - \theta) \quad i_b = \sqrt{2}I_P \cos(\omega t - \theta - 120°)$$
$$i_c = \sqrt{2}I_P \cos(\omega t - \theta + 120°)$$

- The total instantaneous power is

$$p = p_a + p_b + p_c = v_{AN} i_a + v_{BN} i_b + v_{CN} i_c$$

# Instantaneous power

- The total instantaneous power is

$$
\begin{aligned}
p &= v_{AN} i_a + v_{BN} i_b + v_{CN} i_c \\
&= 2V_P I_P [\cos\omega t \cos(\omega t - \theta) \\
&\quad + \cos(\omega t - 120°)\cos(\omega t - \theta - 120°) \\
&\quad + \cos(\omega t + 120°)\cos(\omega t - \theta + 120°)]
\end{aligned}
$$

- Applying the identity $\cos A \cos B = \frac{1}{2}[\cos(A+B) + \cos(A-B)]$

  we find that $p = 3V_P I_P \cos\theta$

- Is the instantaneous power a function of time?

# Powers per phase

- Since the total instantaneous power isn't a function of time, the average power per phase is

$$P_P = V_P I_P \cos\theta$$

- Likewise, the reactive and apparent power are

$$Q_P = V_P I_P \sin\theta \quad S_P = V_P I_P$$

- The complex power per phase is

$$\mathbf{S}_P = P_P + jQ_P = \mathbf{V}_P \mathbf{I}_P^*$$

# Total powers

- In terms of line voltages and currents, recall

$$\text{Y-loads} \qquad V_L = \sqrt{3}V_P \qquad I_L = I_P$$

$$\Delta\text{-loads} \qquad V_L = V_P \qquad I_L = \sqrt{3}I_P$$

thus the total real and reactive power is given

$$P = P_a + P_b + P_c = 3V_P I_P \cos\theta = \sqrt{3}V_L I_L \cos\theta$$

$$Q = Q_a + Q_b + Q_c = 3V_P I_P \sin\theta = \sqrt{3}V_L I_L \sin\theta$$

# Total complex power

- The total complex power is

$$\mathbf{S} = 3\mathbf{S}_P = 3\mathbf{V}_P\mathbf{I}_P^* = 3I_P^2\mathbf{Z}_P = \frac{3V_P^2}{\mathbf{Z}^*}$$

where the load impedance per phase is $\mathbf{Z}_P = Z\angle\theta$.

- Using line voltages, we could write

$$\mathbf{S} = P + jQ = \sqrt{3}V_L I_L \angle\theta$$

# Example Problem 1

Determine the total average power, reactive power and complex power at the source and at the load.

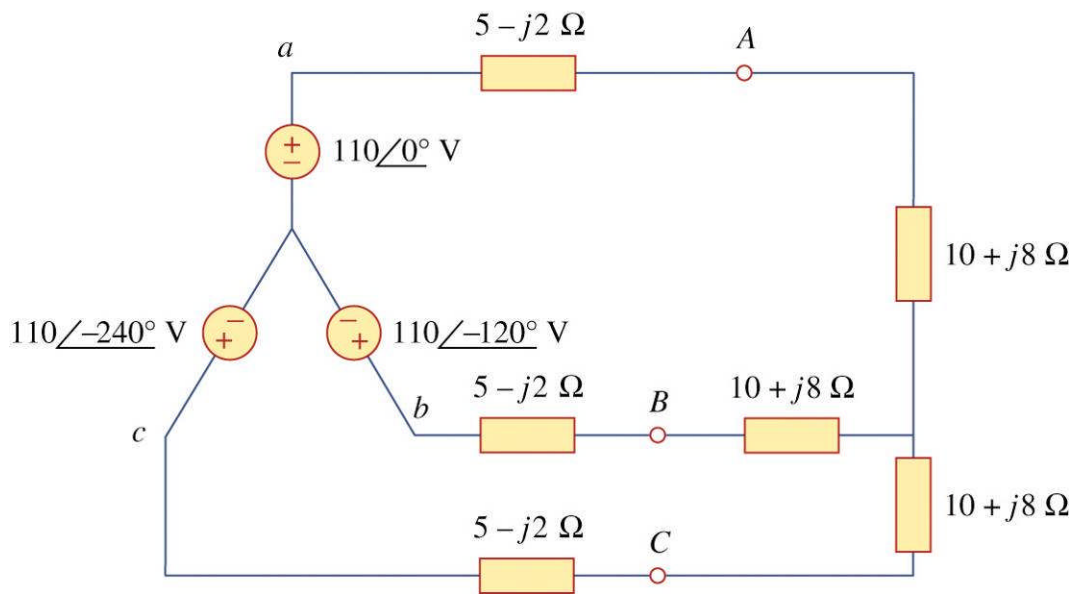

# 3-phase systems use less wire

# Comparing performance

- Consider a single phase system below.

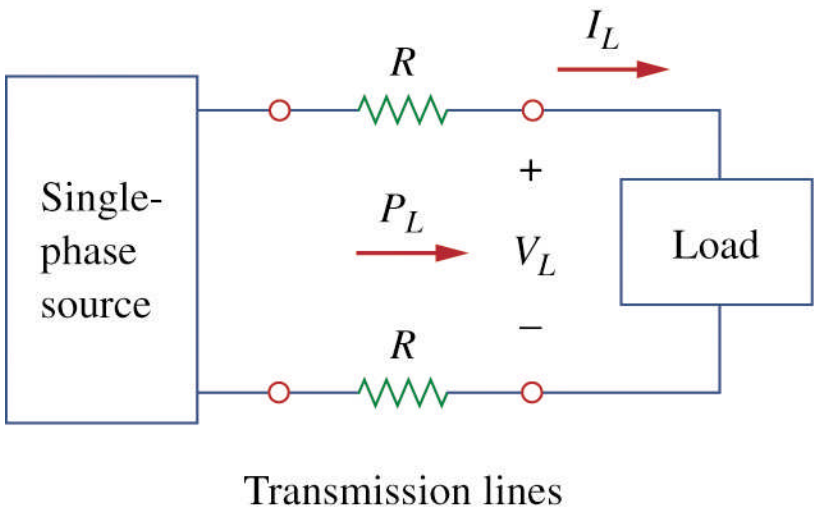


- What is the total power loss on the transmission lines?

# Single-phase system

- Power loss is given $P_{\text{loss}} = 2 \times I_L^2 R$

- In terms of the load power, power loss is given

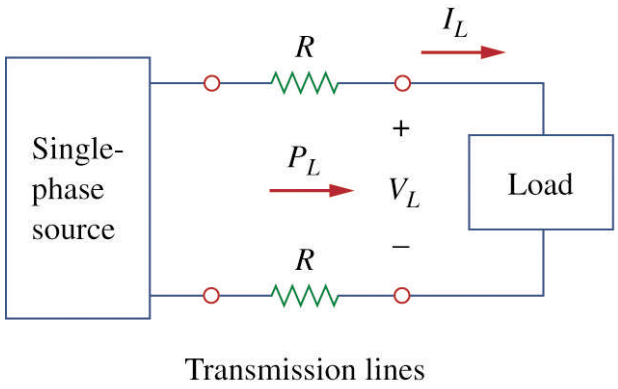


$$\text{Since } P_L = V_L I_L, \text{ then } I_L = \frac{P_L}{V_L}$$

$$\text{and } P_{\text{loss}} = 2R\frac{P_L^2}{V_L^2}$$

# Three-phase system

- Consider the three-phase system below

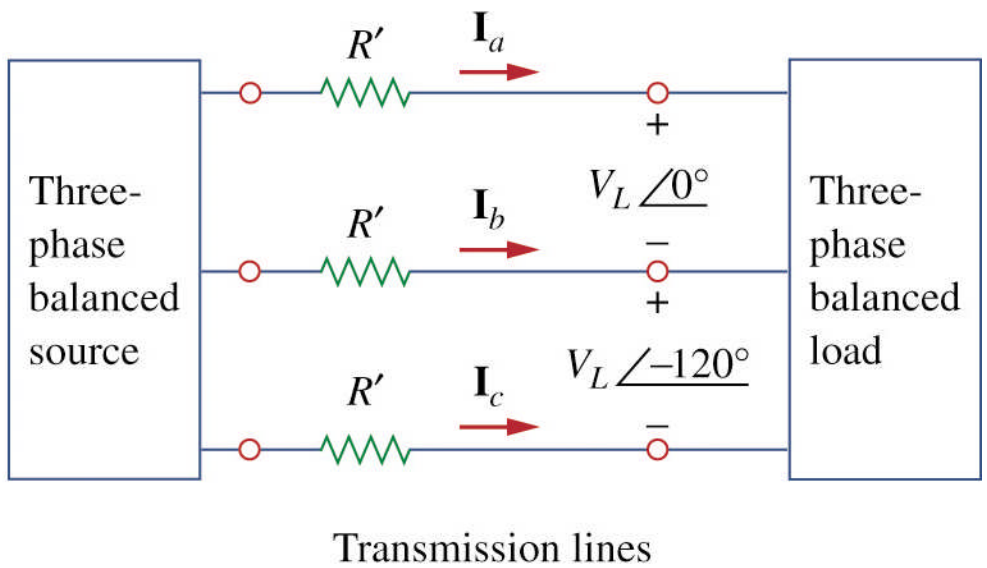


- What is the total power loss on the transmission lines?

# Three-phase system

- Power loss is given $P'_{\text{loss}} = 3 \times (I'_L)^2 R'$

- In terms of the load power, power loss is given

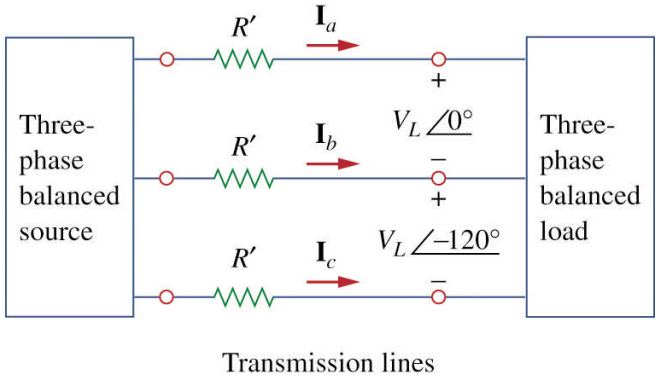


Since $P_L = \sqrt{3} V_L I'_L$, then $I'_L = \dfrac{P_L}{\sqrt{3} V_L}$

and $P'_{\text{loss}} = 3R' \dfrac{P_L^2}{3V_L^2} = R' \dfrac{P_L^2}{V_L^2}$

# Comparing performance

- Comparing $P_{\text{loss}}$ and $P'_{\text{loss}}$ we find $$\frac{P_{\text{loss}}}{P'_{\text{loss}}} = \frac{2R}{R'}$$
- If $R = R'$, the single-wire system suffers twice the transmission power loss of the three-phase system for equal total power delivered to the load.
- Alternatively, for equal transmission power losses, the radius of the wire can be reduced resulting in a 25% savings in material (Cu or Al).

# Example Problem 2

A three-phase motor can be regarded as a balanced Y-load. A 3-phase motor draws 5.6 kW (7.5 hp) when the line voltage is 220 V and the line current is 18.2 A. Determine the power factor of the motor.

**Baldor M1509T** ($1953.00)

# Example Problem 3
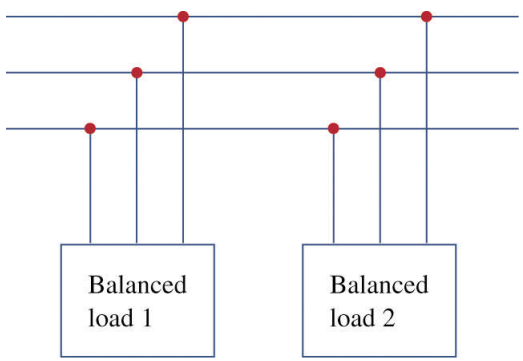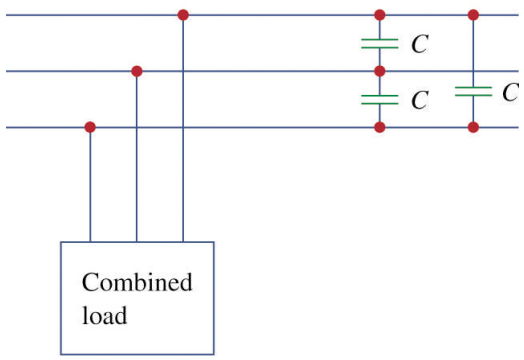
Two balance loads are connected to a 240-kV rms, 60-Hz line. Load 1 draws 30 kW (pf=0.6 lagging) while load 2 draws 45 kVAR (pf=0.8 lagging). Assuming the *abc* sequence determine the (a) the complex, real and reactive powers absorbed by the load, (b) the line currents, and (c) the kVAR rating of the 3 capacitors D-connected in parallel that will raise the pf to 0.9 lagging and the capacitance of each capacitor.