Lesson 29: 3-Phase Power

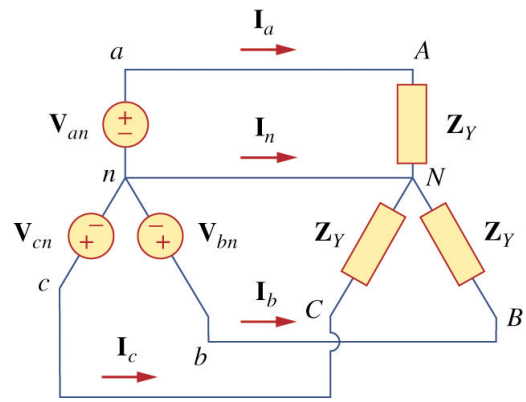

Instantaneous power (3-phase)
Considering the following system, develop an expression for total *instantaneous* power delivered.

$$\mathbf{V}_{AN} = V_p\angle 0°, \mathbf{V}_{BN} = V_p\angle -120°,\ \mathbf{V}_{CN} = V_p\angle +120°,\ \mathbf{Z}_Y = Z\angle\theta$$

The instantaneous phase voltages are given

$v_{AN} =$ $\qquad$ $v_{BN} = \sqrt{2}V_P\cos(\omega t - 120°)$

$v_{CN} = \sqrt{2}V_P\cos(\omega t + 120°)$

implying the phase currents are

$$i_a = \sqrt{2}I_P\cos(\omega t - \theta) \quad i_b = \sqrt{2}I_P\cos(\omega t - \theta - 120°) \quad i_c = \sqrt{2}I_P\cos(\omega t - \theta + 120°)$$

The total instantaneous power is $p =$

$$\begin{aligned} &= 2V_P I_P[\cos\omega t\cos(\omega t - \theta) \\ &\quad + \cos(\omega t - 120°)\cos(\omega t - \theta - 120°) \\ &\quad + \cos(\omega t + 120°)\cos(\omega t - \theta + 120°)] \end{aligned}$$

Applying the identity $\cos A\cos B = \frac{1}{2}\left[\cos(A+B) + \cos(A-B)\right]$

we find that $p =$

Is the instantaneous power a function of time? _____

Powers per phase
Since the total instantaneous power isn't a function of time, the average power per phase is

$P_p =$

Likewise, the reactive and apparent power are $\quad Q_p =$ $\qquad$ $S_p =$

The complex power per phase is $\mathbf{S} =$

Total powers
In terms of line voltages and currents, recall

Y-loads	$V_L =$	$I_L =$
Δ-loads	$V_L =$	$I_L =$

thus the total real and reactive power is given $\quad P = P_a + P_b + P_c =$ $\qquad$ $=$

$Q = Q_a + Q_b + Q_c =$ $\qquad$ $=$

Total complex power

The total complex power is $\mathbf{S} = 3\mathbf{S}_P = 3\mathbf{V}_P\mathbf{I}_P^* = 3I_P^2\mathbf{Z}_P = \dfrac{3V_P^2}{\mathbf{Z}^*}$

where the load impedance per phase is $Z_P = Z\angle\theta$.

Using line voltages, we could write $\mathbf{S} = P + jQ = \sqrt{3}V_L I_L\angle\theta$

Comparing performance

Consider a single phase system.

What is the total power loss on the transmission lines?

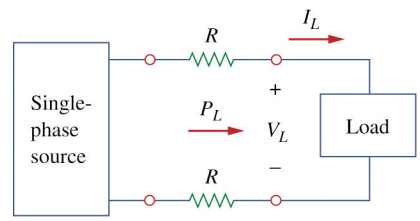

Transmission lines

Power loss is given $P_{\text{loss}} =$

In terms of the load power, power loss is given

Since $P_L = V_L I_L$, then $I_L = \dfrac{P_L}{V_L}$ and $P_{\text{loss}} =$

Three-phase system

Consider the three-phase system below

What is the total power loss on the transmission lines?

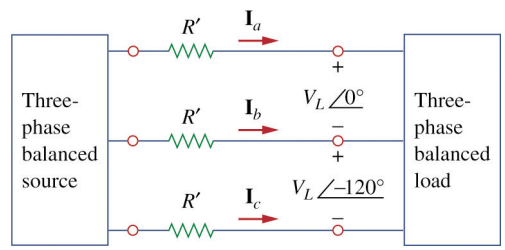

Transmission lines

Power loss is given $P_{\text{loss}} =$

In terms of the load power, power loss is given

Since $P_L = \sqrt{3}V_L I_L$, then $I_L = \dfrac{P_L}{\sqrt{3}V_L}$ and $P'_{\text{loss}} =$

Comparing performance

Comparing P_{loss} and P'_{loss} we find $\dfrac{P_{\text{loss}}}{P'_{\text{loss}}} = \dfrac{2R}{R'}$

If $R = R'$, the single-wire system suffers _____ the transmission power loss of the three-phase system for equal total power delivered to the load.

Alternatively, for equal transmission power losses, the radius of the wire can be reduced resulting in a _____% savings in material (Cu or Al).

Unbalanced three-phase systems

All our previous work was predicated on balanced systems.

Unbalance systems can arise due to

- Source voltages are not equal in _____ and/or _____
- _____ are unequal

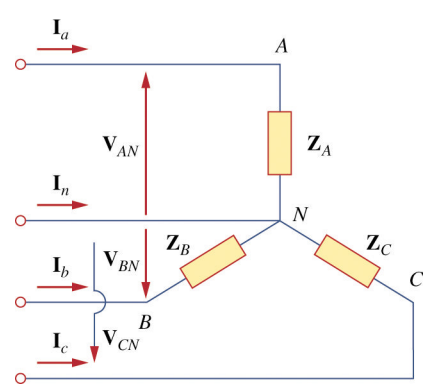

In the case below where Z_A, Z_B, Z_C are not identical, then

$$\mathbf{I}_a = \frac{\mathbf{V}_{AN}}{\mathbf{Z}_A}, \quad \mathbf{I}_b = \frac{\mathbf{V}_{BN}}{\mathbf{Z}_B}, \quad \mathbf{I}_c = \frac{\mathbf{V}_{CN}}{\mathbf{Z}_C}$$

$$\mathbf{I}_a + \mathbf{I}_b + \mathbf{I}_c =$$

Example Problem 1

Determine the total average power, reactive power and complex power at the source and at the load.

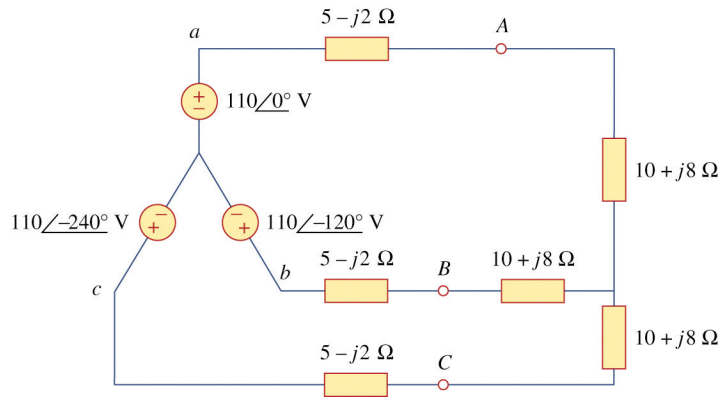

Example Problem 2

A three-phase motor can be regarded as a balanced Y-load. A 3-phase motor draws 5.6 kW (7.5 hp) when the line voltage is 220 V and the line current is 18.2 A. Determine the power factor of the motor.

Example Problem 3
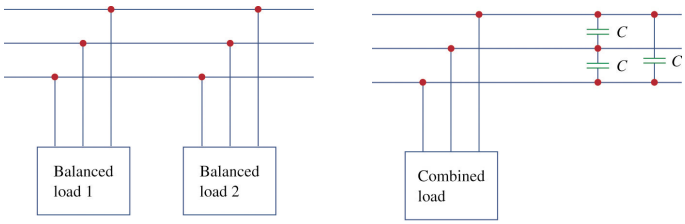
Two balance loads are connected to a 240-kV rms, 60-Hz line. Load 1 draws 30 kW (pf=0.6 lagging) while load 2 draws 45 kVAR (pf=0.8 lagging). Assuming the *abc* sequence determine the (a) the complex, real and reactive powers absorbed by the load, (b) the line currents, and (c) the kVAR rating of the 3 capacitors D-connected in parallel that will raise the pf to 0.9 lagging and the capacitance of each capacitor.