Lesson 3: Series and parallel resistance

Problem Set 2

- I'm assigning a different selection of problems for PS2 than what is posted on the course website.
- Please do problems 2.29, 2.30, 2.34, 2.38, 2.42, 2.47
- Also posted

http://www.usna.edu/Users/ee/kintzley/schedule.htm

Circuit analysis toolbox

Circuit analysis toolbox

Series

- Recall from our discussion of network topology the definition of elements in **series.**

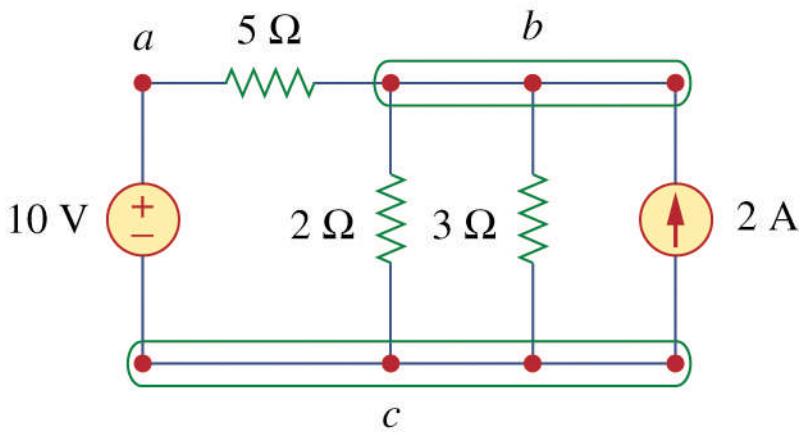

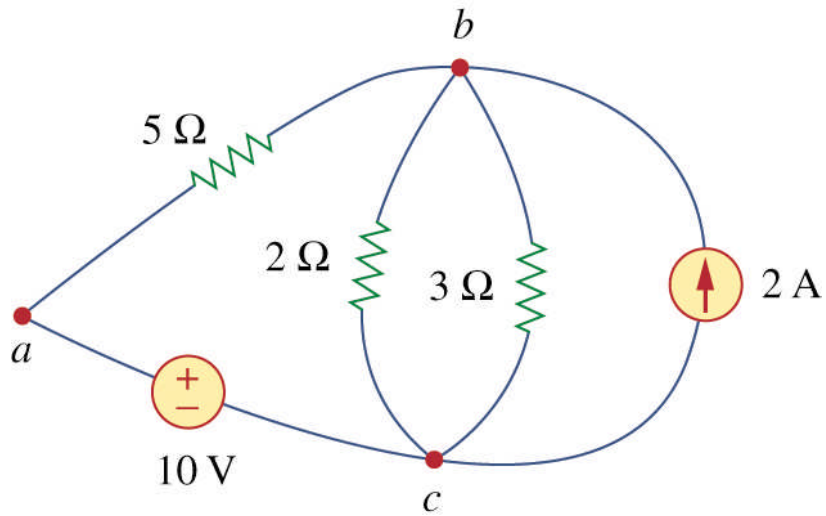

Series

- Two or more elements are in **series** if they exclusively share a single node.
- As a consequence of the law of conservation of charge, the current through two elements in series is the same.

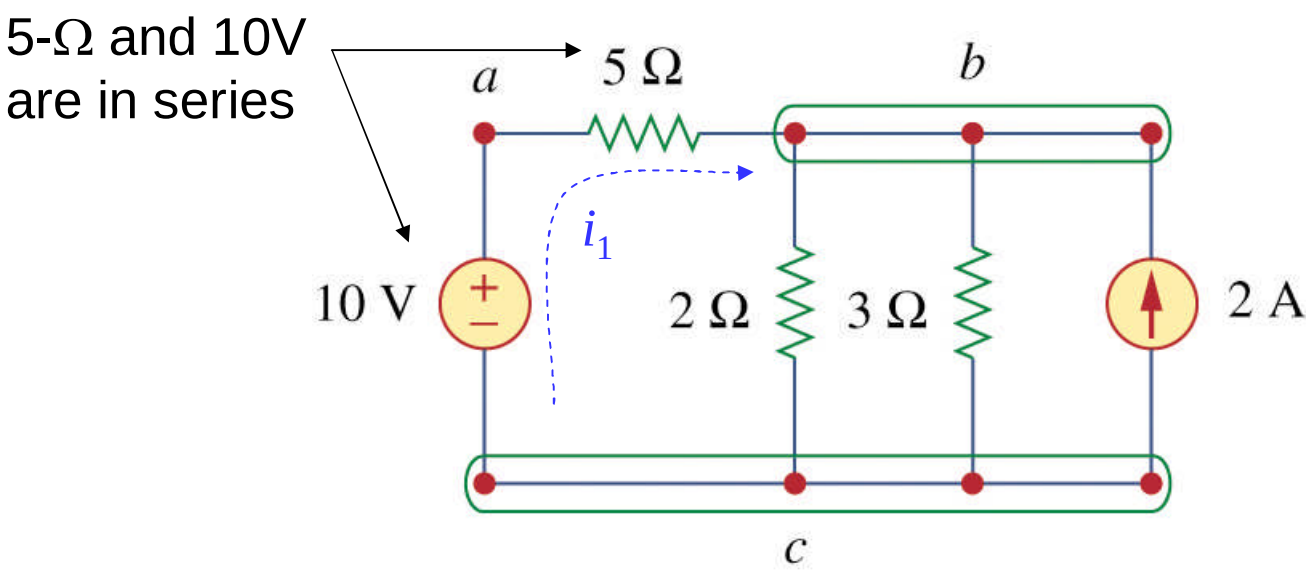

Two resistors in series

- Consider the case of two resistors in series.

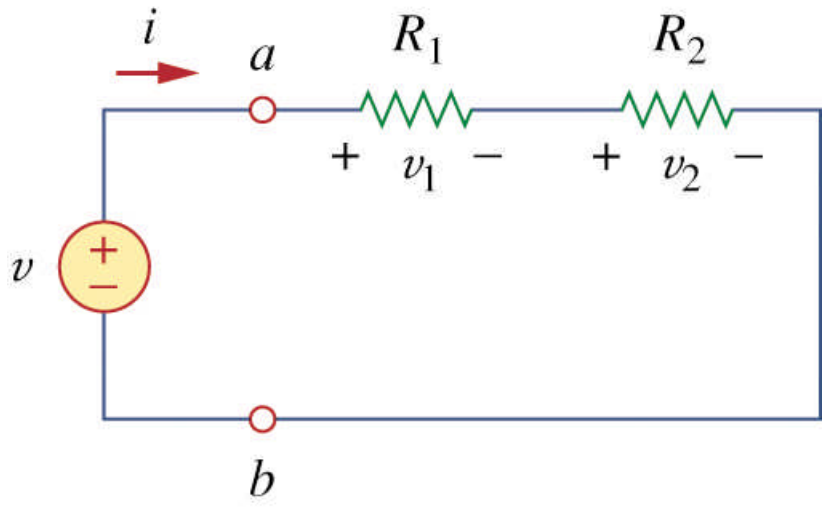

Two resistors in series

- Two resistors in series can be replaced by an equivalent resistance R_{eq}.

$$R_{eq} = R_1 + R_2$$

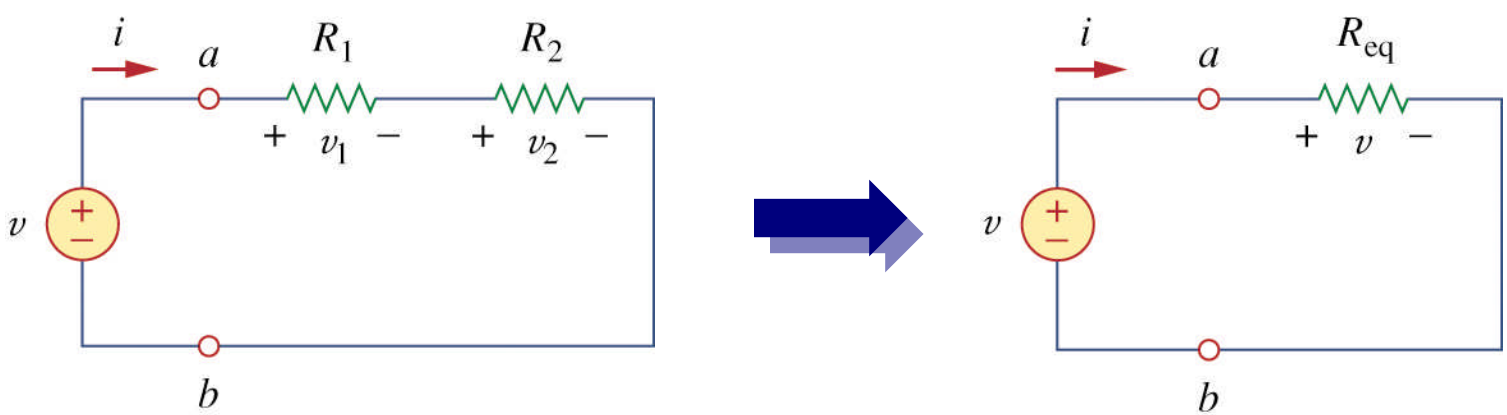

Black box

- In circuit analysis, we will often speak about equivalents or how a circuit “looks” as viewed through terminals a-b.
- We are interested in the voltage-current relationship at terminals a-b.

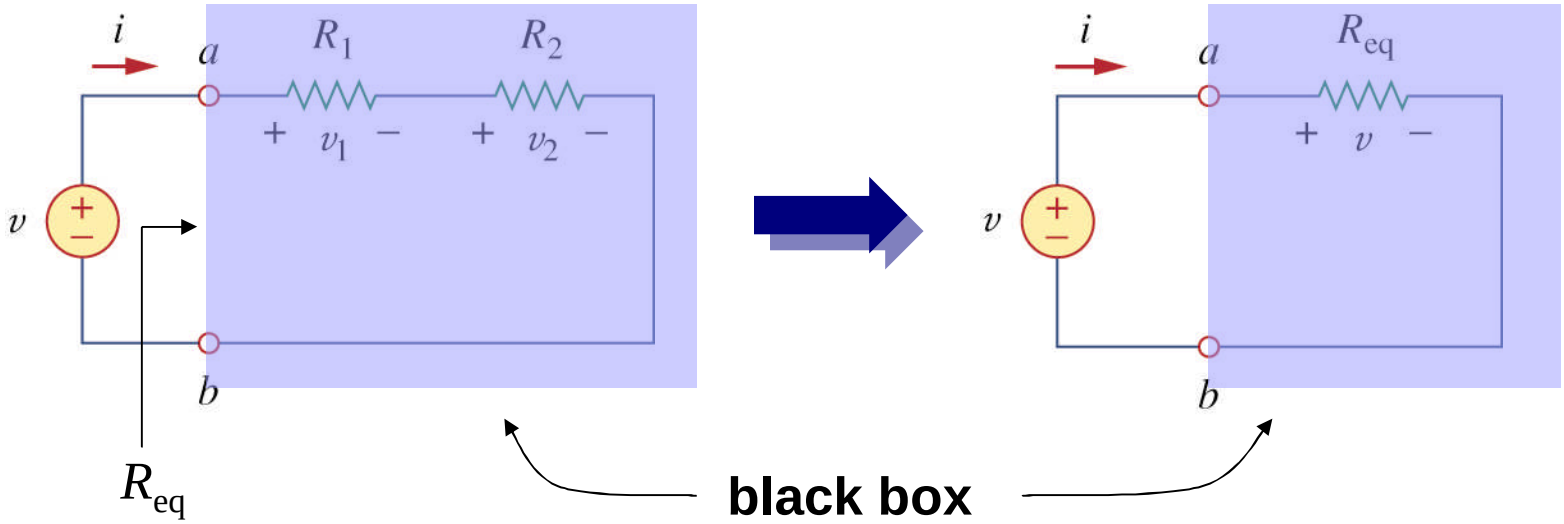

N resistors in series

- The equivalent resistance R_{eq} of any number of resistors in series is the sum of the individual resistances.

$$R_{eq} = R_1 + R_2 + \cdots + R_N = \sum_{n=1}^{N} R_n$$

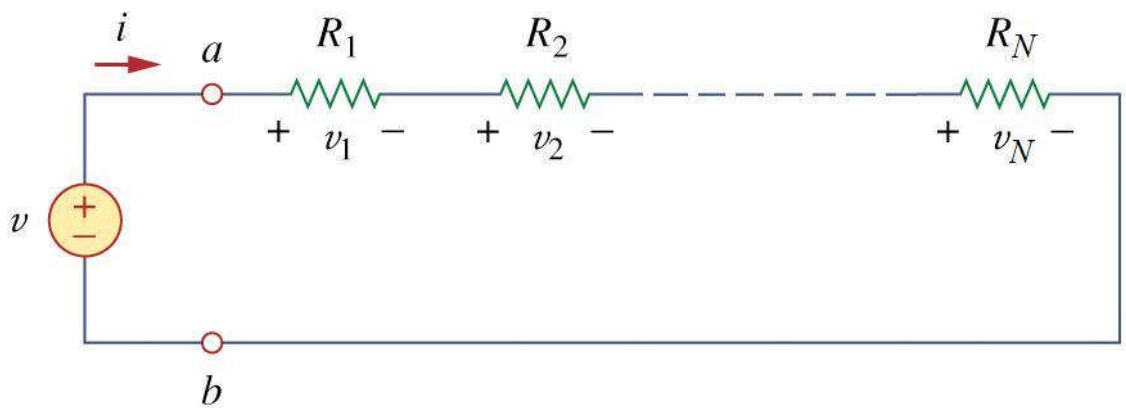

Parallel

- Recall from our discussion of network topology the definition of elements in **parallel.**

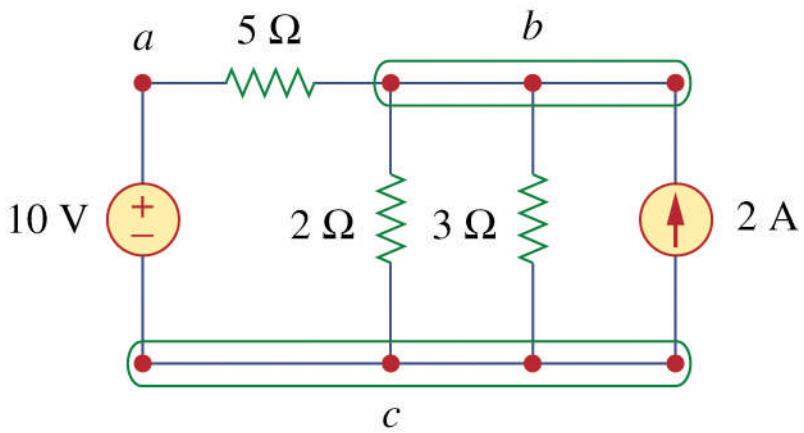

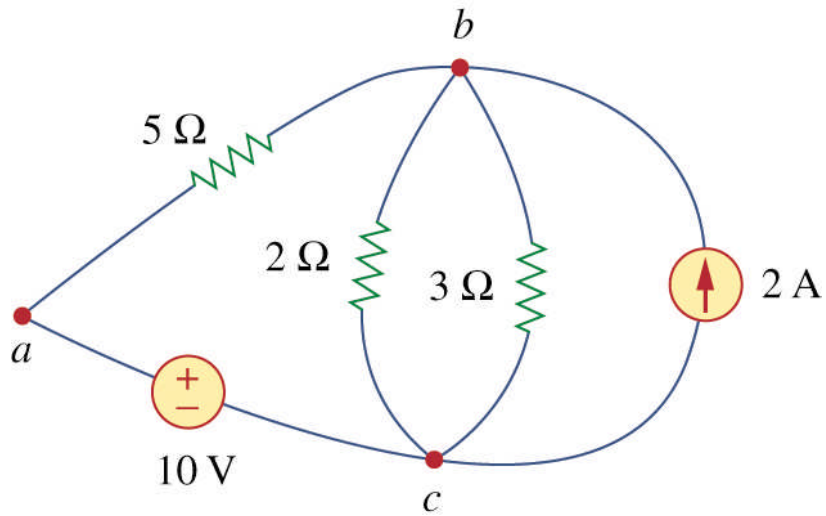

Parallel

- Two or more elements are in **parallel** if they are connected to the same two nodes and consequently have the same voltage across them.

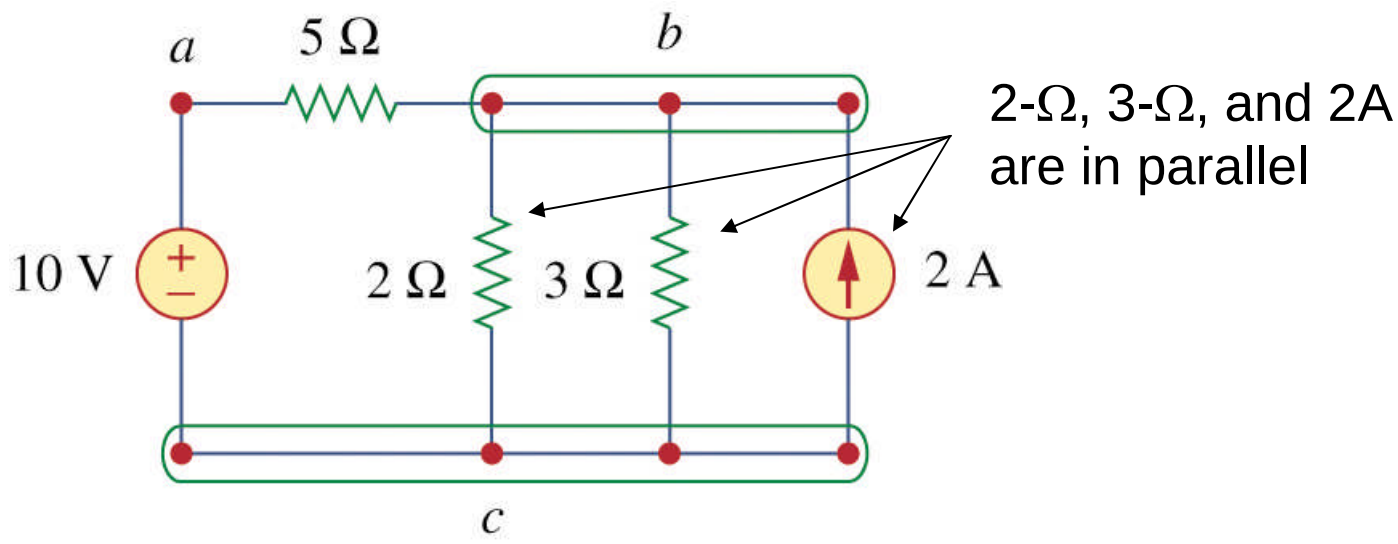

Two resistors in parallel

- Consider the case of two resistors in parallel.

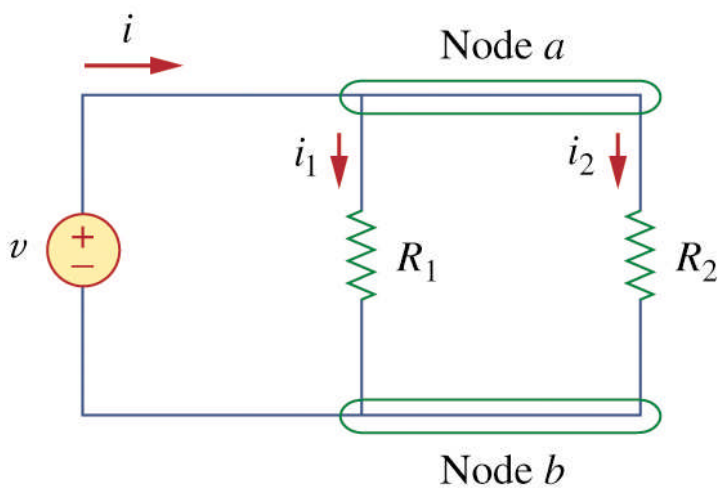

Two resistors in parallel

- Two resistors in parallel can be replaced by an equivalent resistance R_{eq} where

$$R_{eq} = \frac{R_1 R_2}{R_1 + R_2}$$

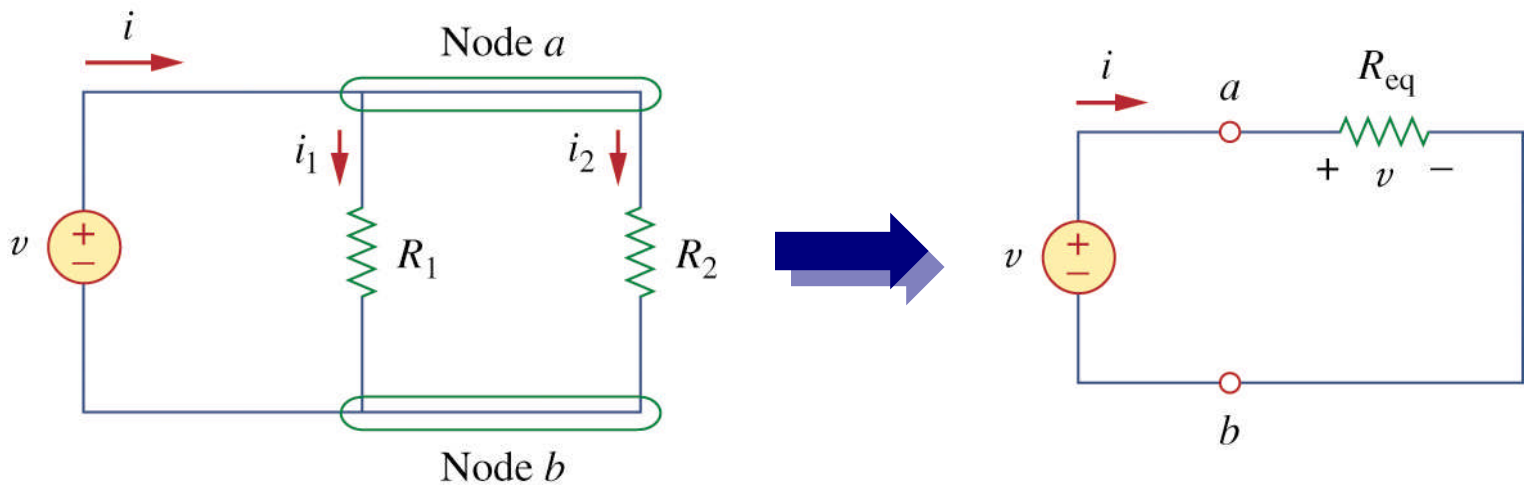

Three resistors in parallel

- The following equation is an **incorrect** generalization for three resistors in parallel!

$$R_{eq} \neq \frac{R_1 R_2 R_3}{R_1 + R_2 + R_3}$$

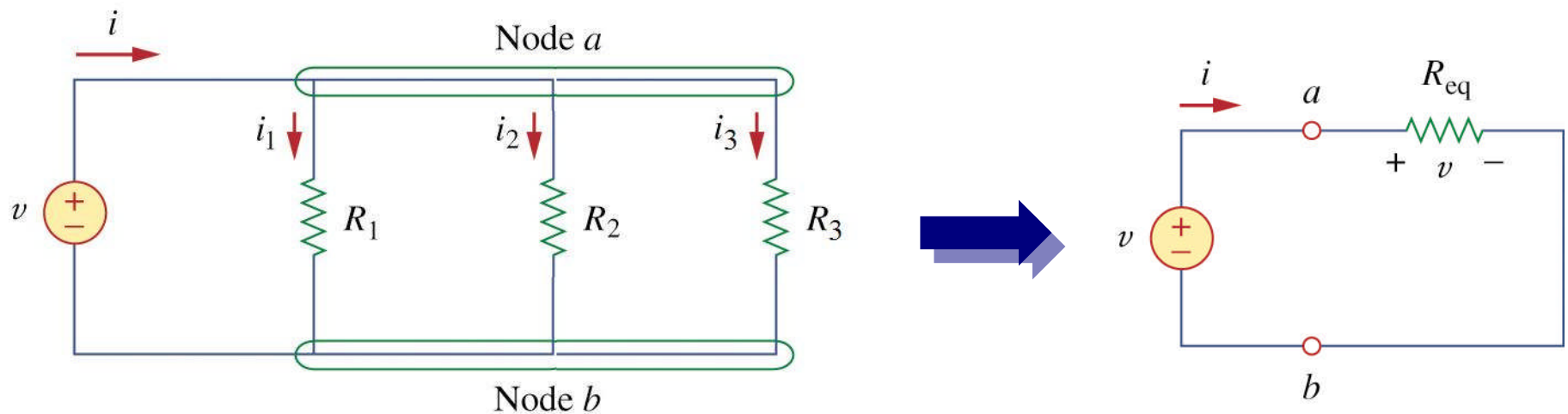

N resistors in parallel

- The following equation is a **correct** generalization for N resistors in parallel.

$$\frac{1}{R_{eq}} = \frac{1}{R_1} + \frac{1}{R_2} + \cdots + \frac{1}{R_N}$$

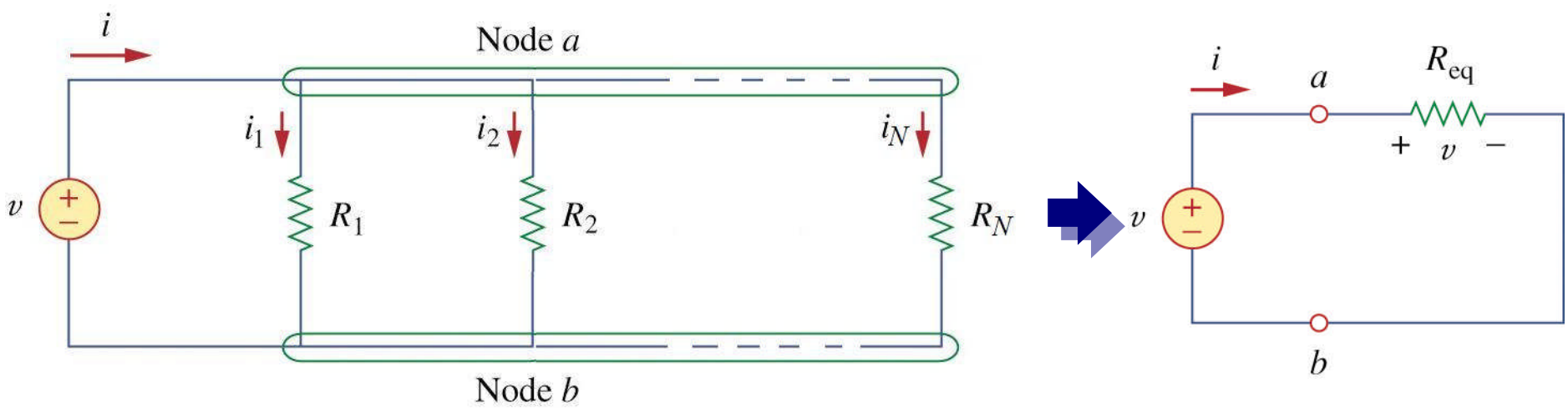

Resistors in parallel

- Consider again two resistors in parallel such that $R_2 = a\,R_1$ where $a > 0$.

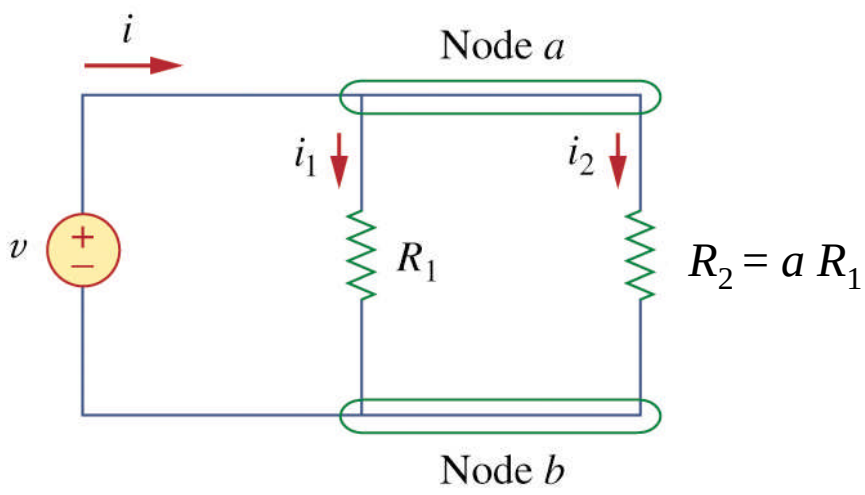

Resistors in parallel

- If $R_2 = a\,R_1$, then the equivalent resistance R_{eq} is

$$R_{eq} = \frac{a}{1+a} R_1$$

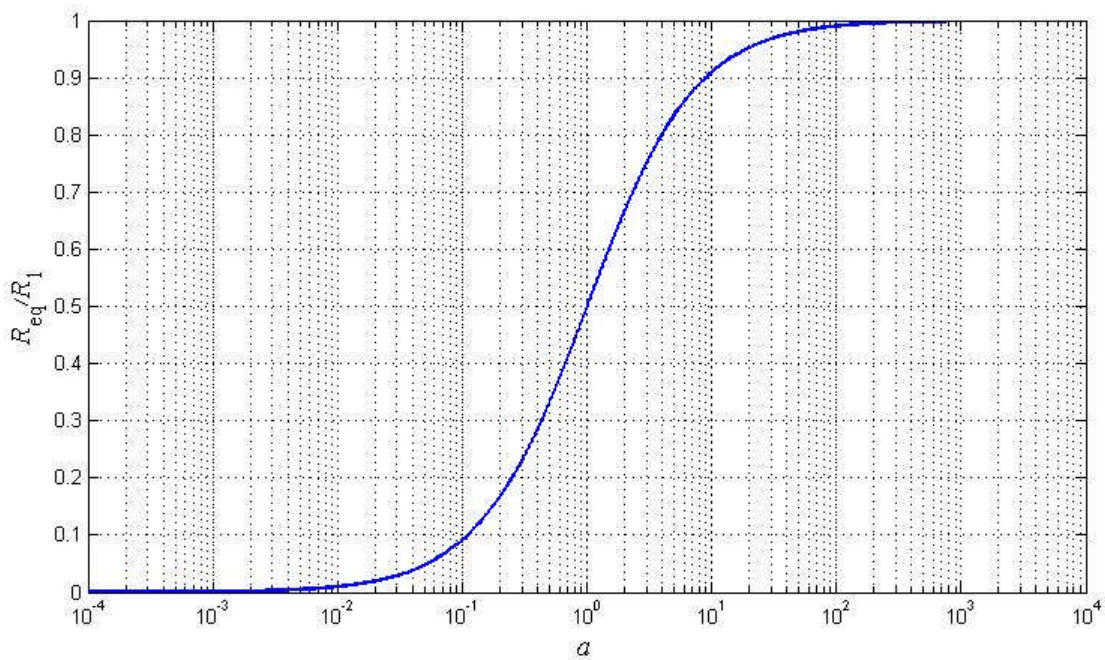

Resistors in parallel

- If two resistors of equal value are in parallel ($R_1 = R_2$), then $R_{\text{eq}} = R_1/2$ (case where $a = 1$).
  - This can be generalized: If N equal resistors are in parallel, then $R_{\text{eq}} = R/N$.

- If two resistors are in parallel such that $R_1 \gg R_2$, then $R_{\text{eq}} \cong R_2$ (case where $a \ll 1$).

$$R_{eq} = \frac{a}{1+a} R_1 \simeq aR_1 = R_2 \text{ when } a \ll 1$$

Example Problem 1

Determine R_{eq} for each of the following.

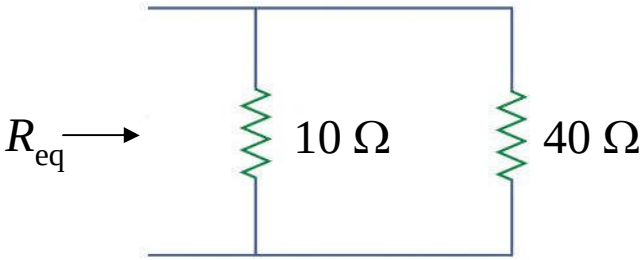

(a)

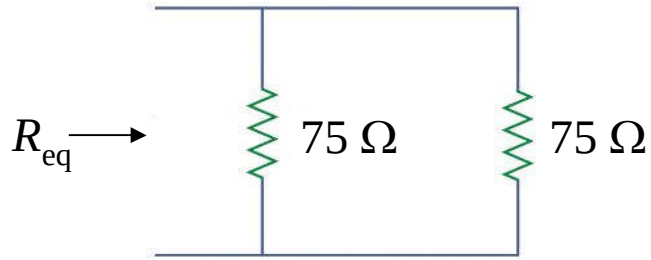

(b)

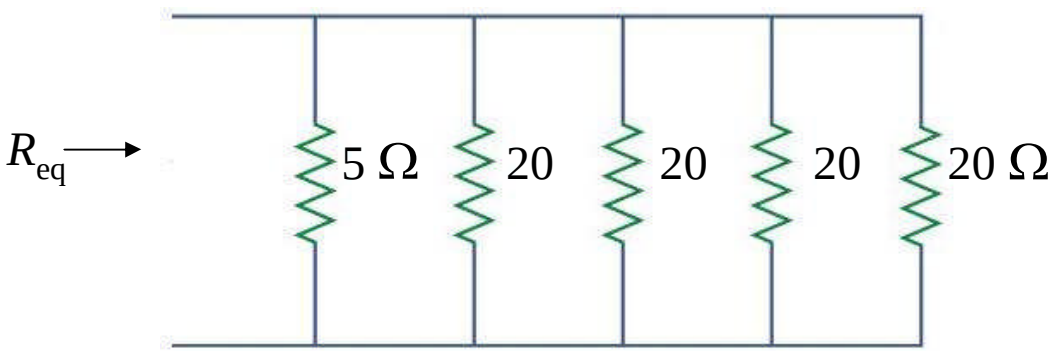

(c)

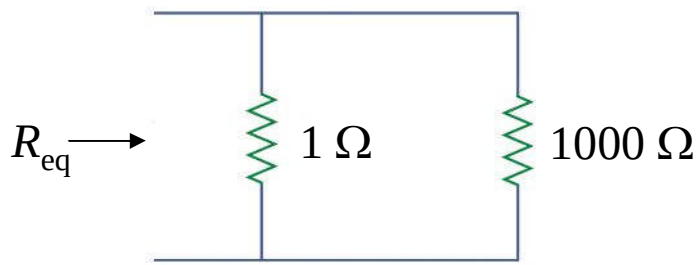

(d)

Conductance in parallel

- When dealing with resistors in parallel, it is often more convenient to use **conductance** (G).

$$G_{eq} = G_1 + G_2 + \cdots + G_N$$

where $G_{eq} = 1/R_{eq}, G_1 = 1/R_1,$ etc.

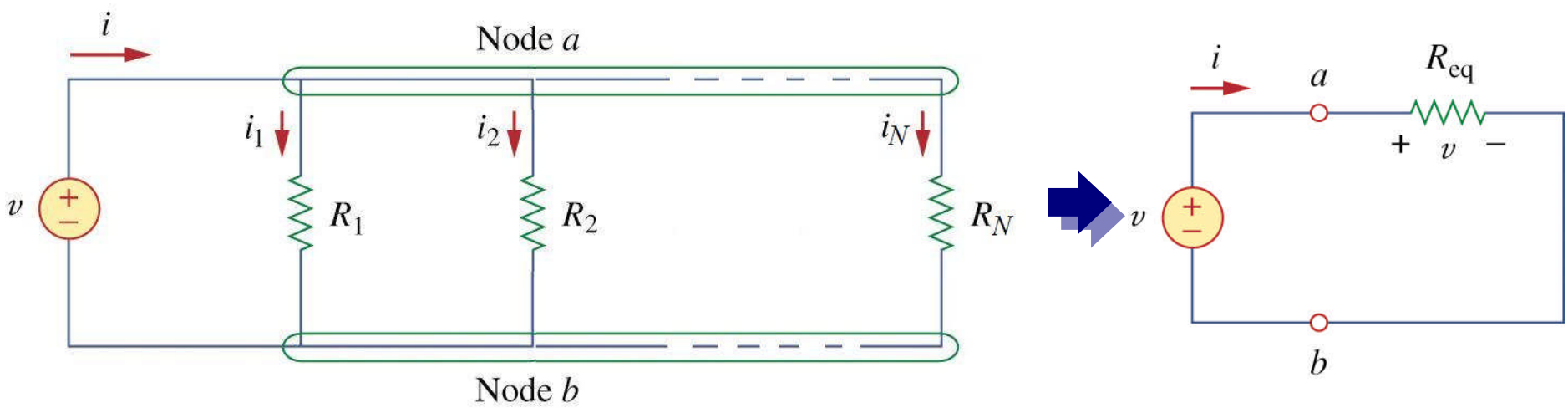

Example Problem 2

Determine R_{eq} using conductances.

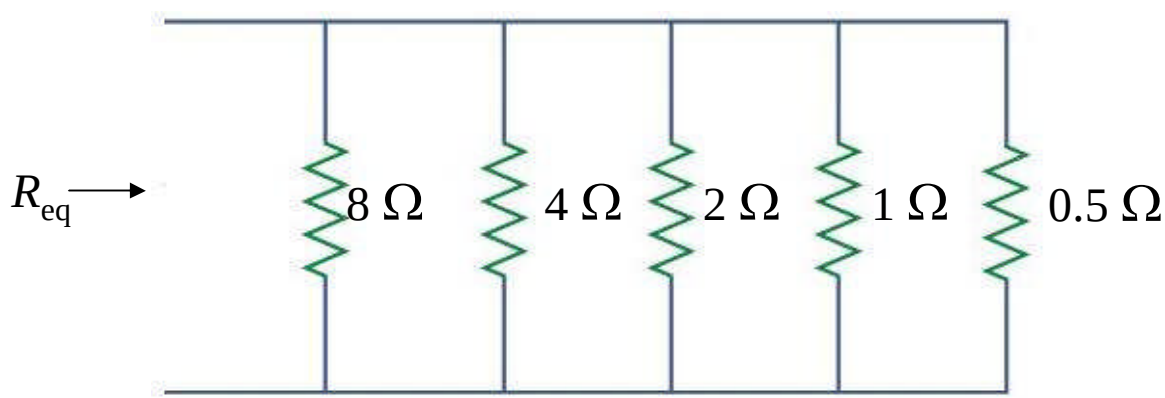

Simplifying circuits

- Often, the first step in circuit analysis reducing a circuit to a simpler equivalent through series and parallel combinations.

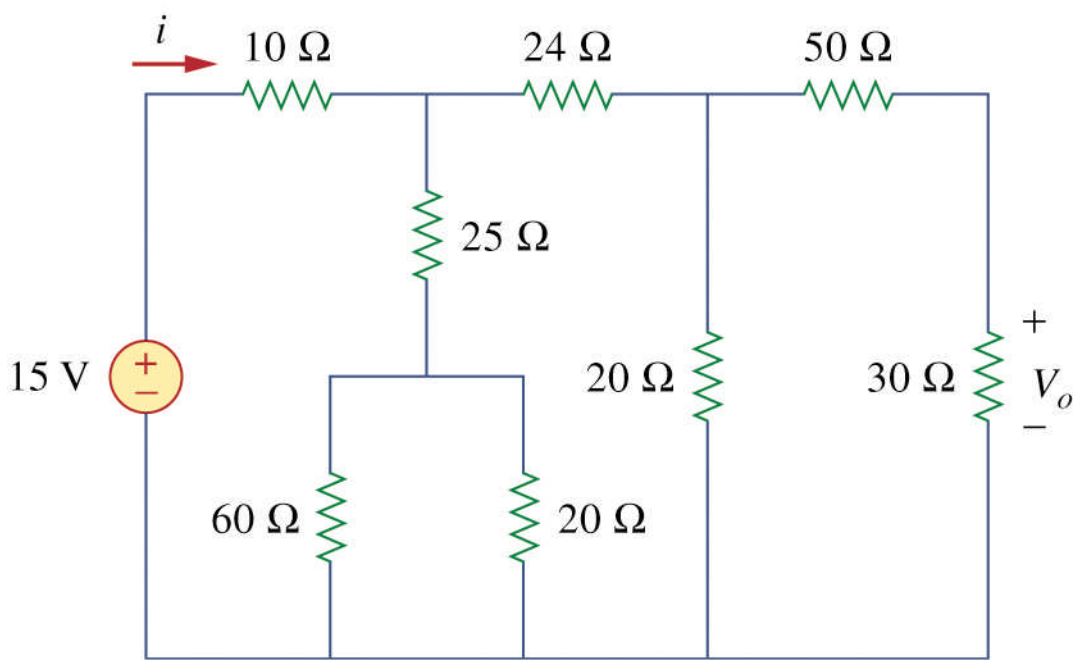

Example Problem 3

Determine R_{eq}.

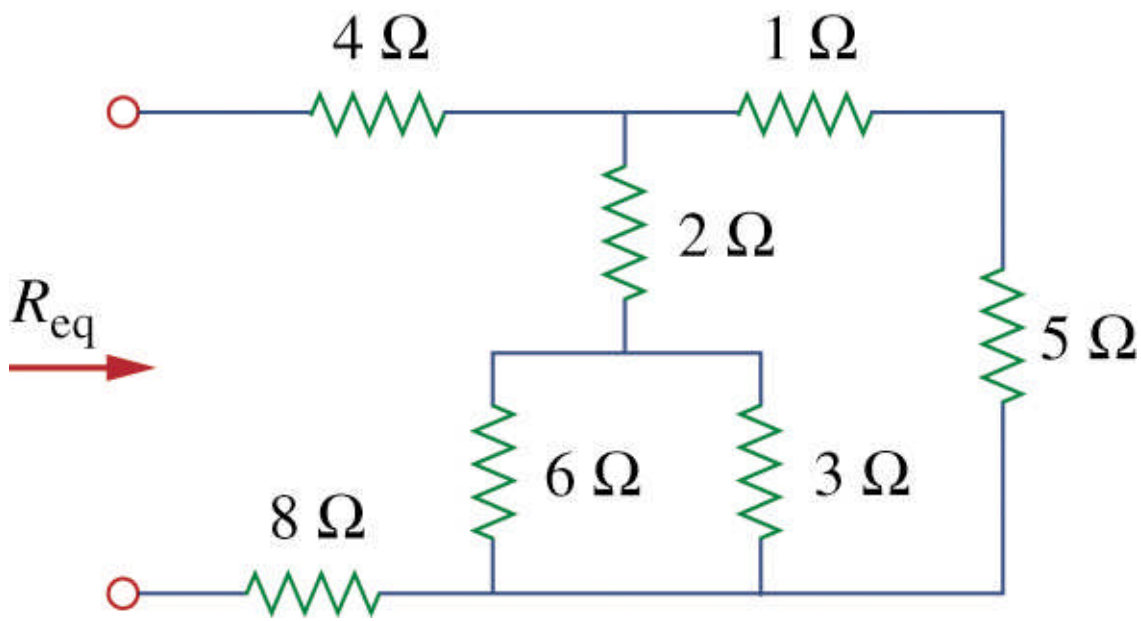

Example Problem 4

Determine R_{eq}.

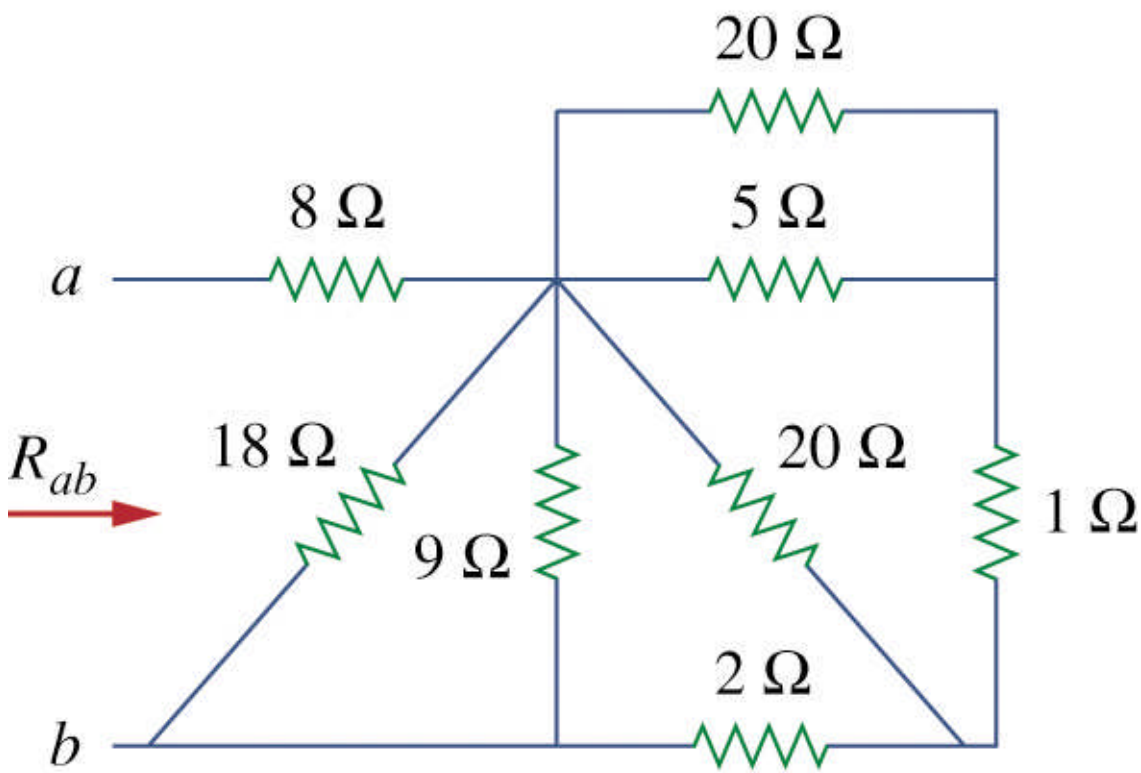

Example Problem 5

Determine R_{eq}.

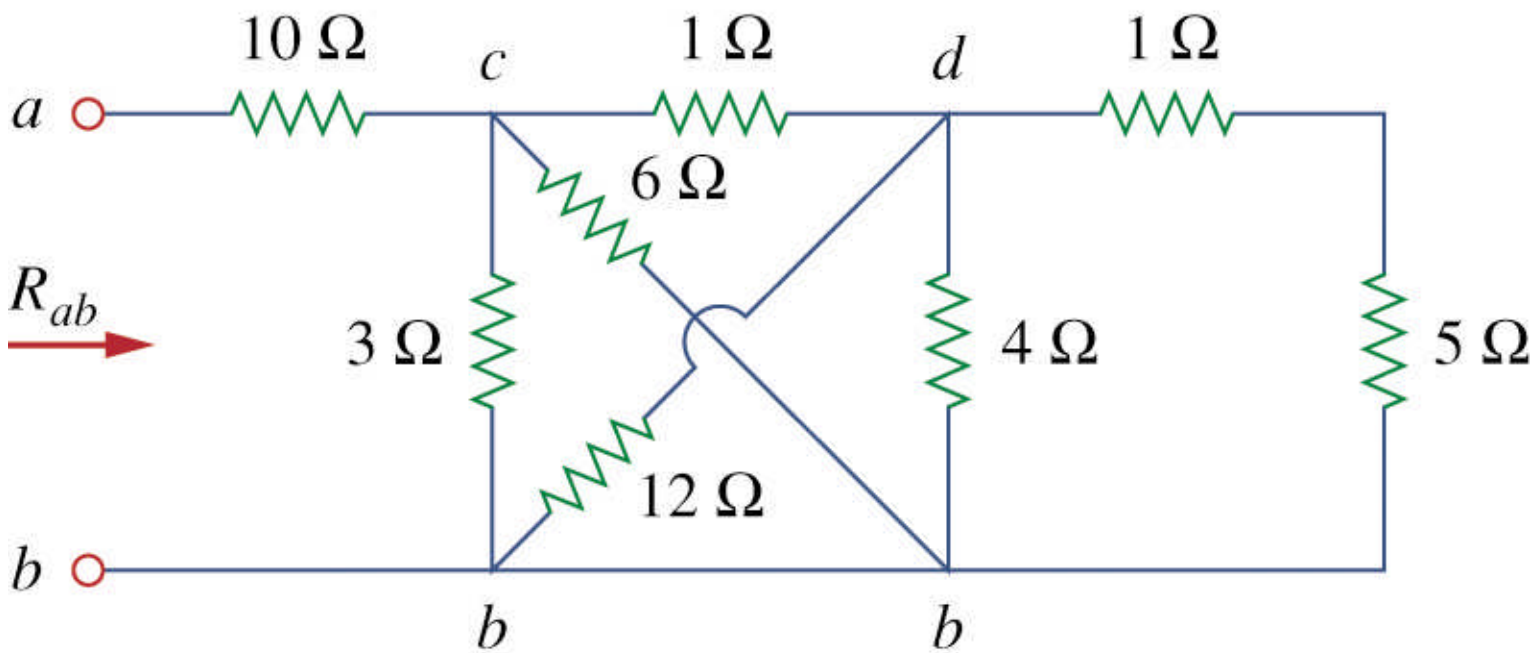

Example Problem 6

Determine the total power dissipated.

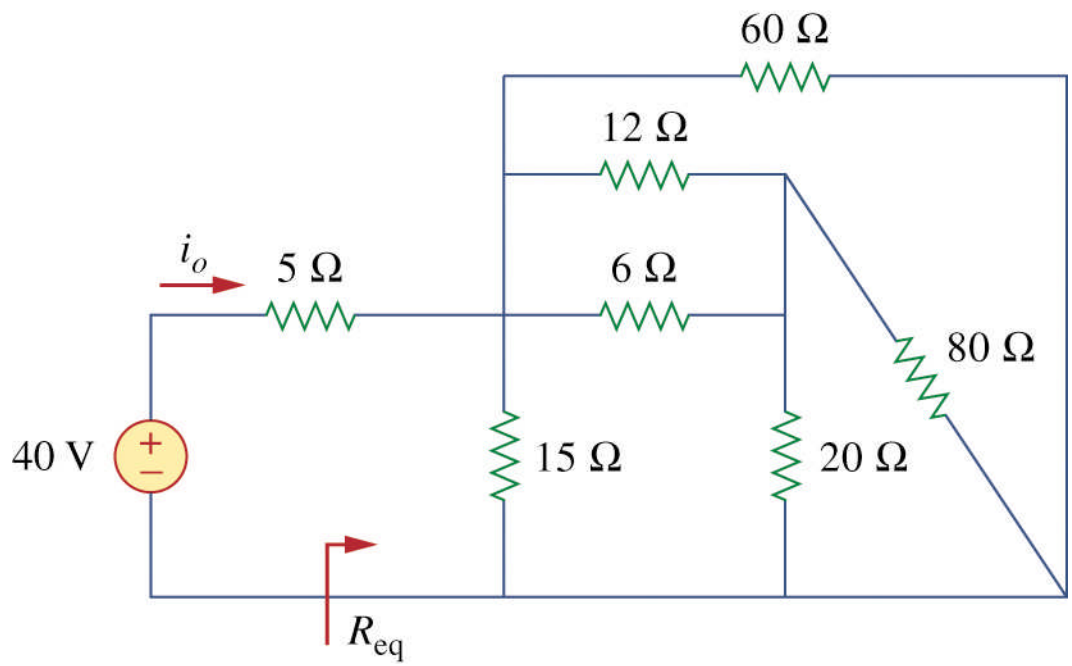

Circuit analysis toolbox

Ohm's law

Series resistance

KVL

Parallel resistance

KCL

Circuit analysis toolbox