Lesson 3: Series and parallel resistance

Series
Two or more elements are in series if they _____.
As a consequence of the law of conservation of charge, the _____ through two elements in series is the same.

Two resistors in series
Consider the case of two resistors in series.

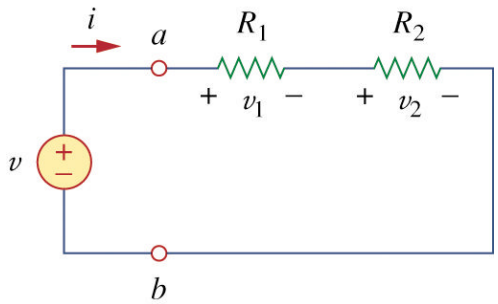

Two resistors in series can be replaced by an equivalent resistance R_{eq}. R_{eq} =

Black box
In circuit analysis, we will often speak about _____ or how a circuit "looks" as viewed through terminals *a*-*b*.
We are interested in the _____ relationship at terminals *a*-*b*.

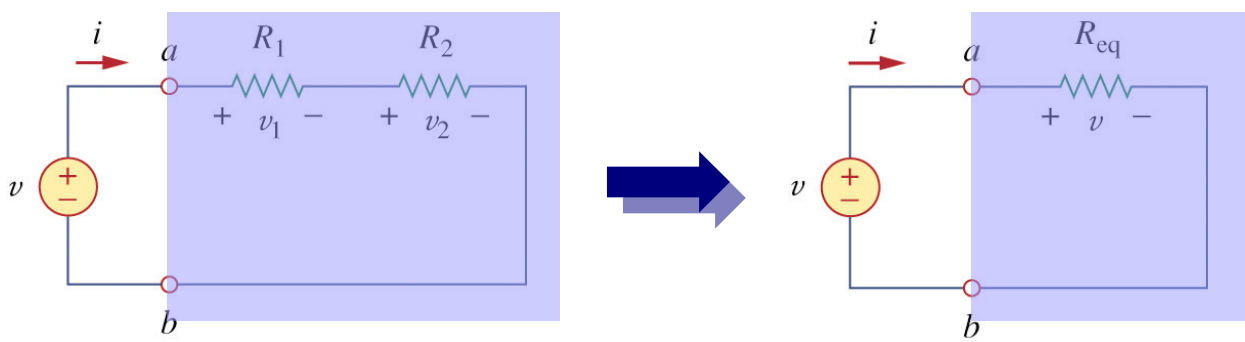

***N* resistors in series**
The equivalent resistance R_{eq} of any number of resistors in series is the sum of the individual resistances.

R_{eq} =

Parallel
Two or more elements are in parallel if they are _____ and consequently have the same _____ across them.

Two resistors in parallel

Consider the case of two resistors in parallel.

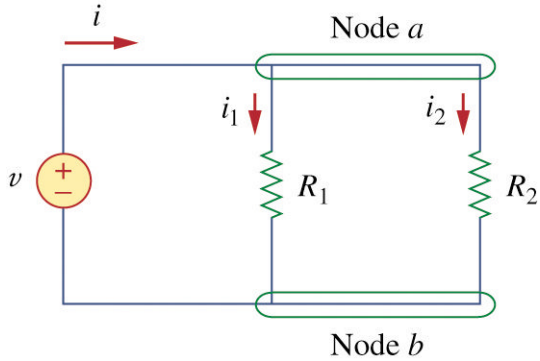

Two resistors in parallel can be replaced by an equivalent resistance R_{eq} where R_{eq} =

***N* resistors in parallel**

The following equation is a correct generalization for *N* resistors in parallel.

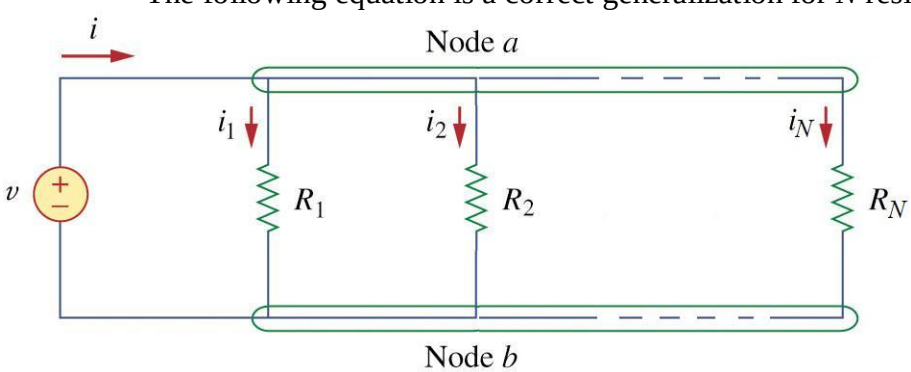

Resistors in parallel

Consider again two resistors in parallel such that $R_2 = a\,R_1$ where $a > 0$.

If $R_2 = a\,R_1$, then the equivalent resistance R_{eq} =

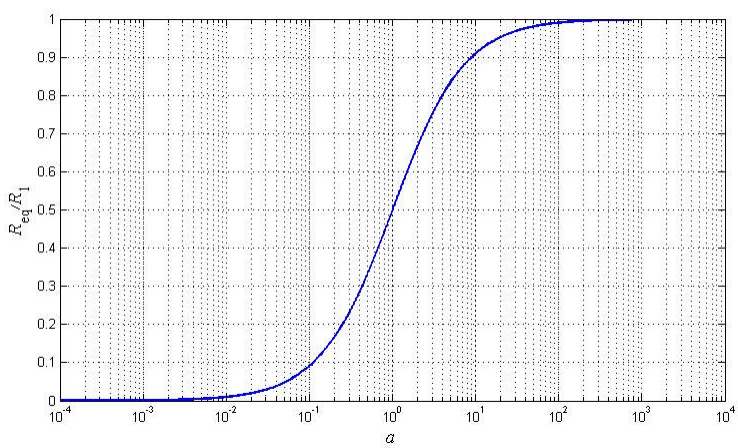

Resistors in parallel

- If two resistors of equal value are in parallel ($R_1 = R_2$), then $R_{eq} =$ (case where $a = 1$).
    - This can be generalized: If N equal resistors are in parallel, then $R_{eq} =$
- If two resistors are in parallel such that $R_1 \gg R_2$, then $R_{eq} \cong$ (case where $a \ll 1$).

Conductance in parallel

When dealing with resistors in parallel, it is often more convenient to use conductance (G).

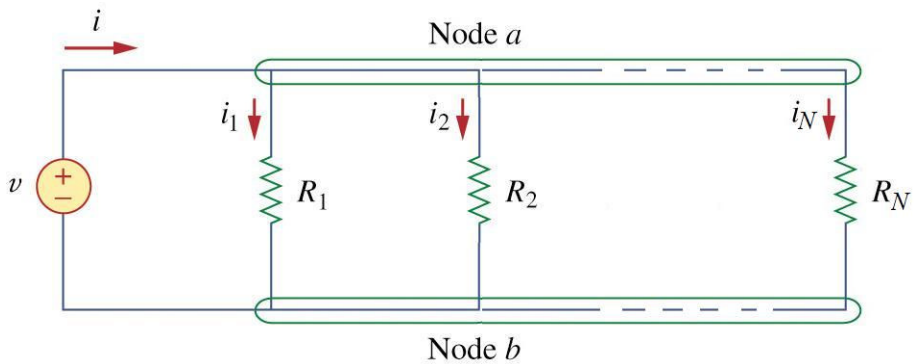

$G_{eq} =$

Example Problem 1

Determine R_{eq} for each of the following.

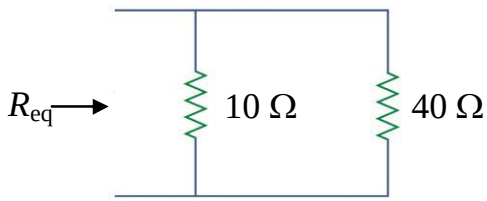

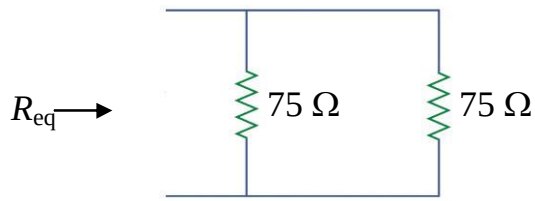

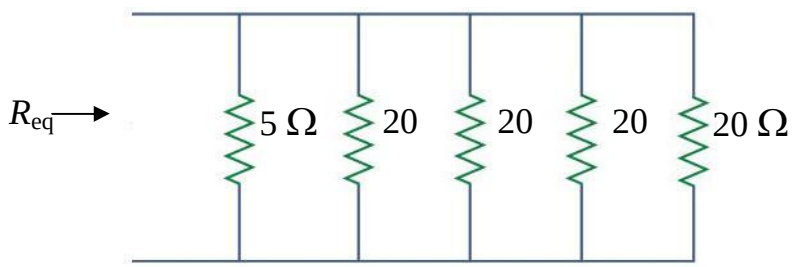

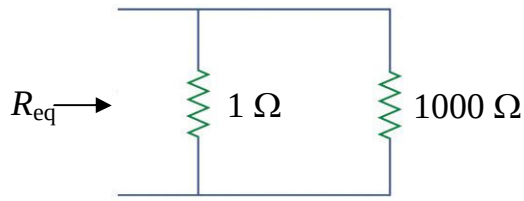

Example Problem 2

Determine R_{eq} using conductances.

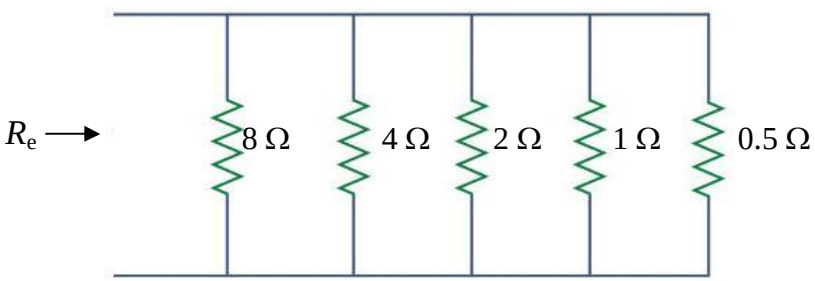

Example Problem 3

Determine R_{eq}.

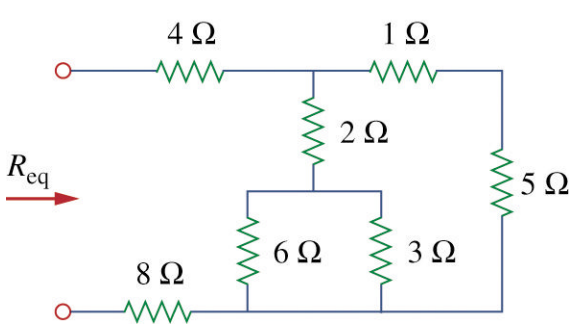

Example Problem 4

Determine R_{eq}.

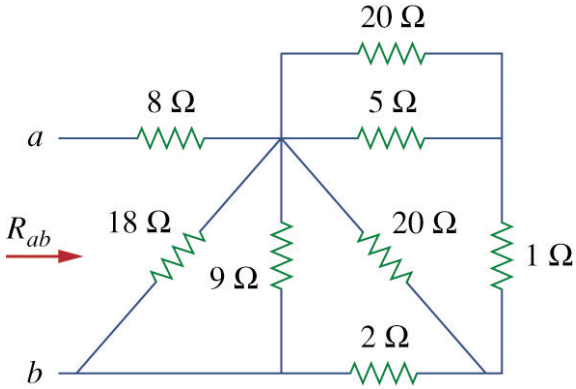

Example Problem 5

Determine R_{eq}.

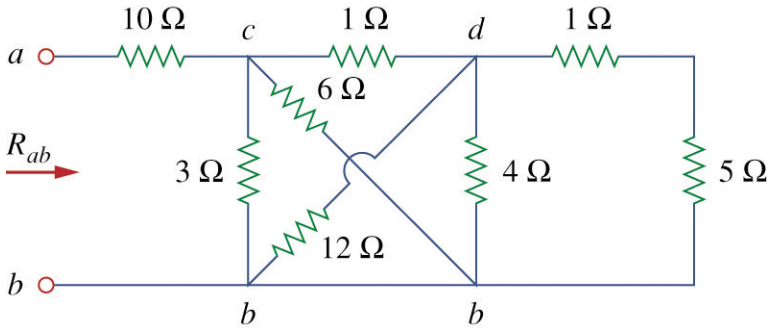

Example Problem 6
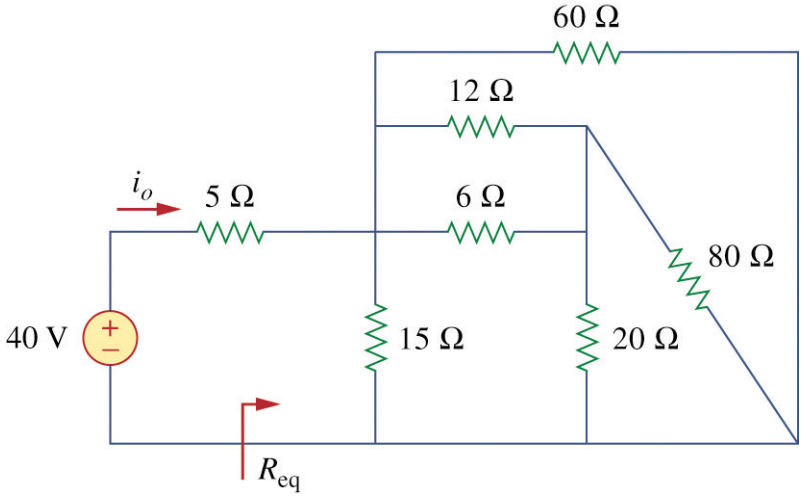
Determine the total power dissipated.