Lesson 34: Filter simplification

Overview

- Our ultimate goal is to construct a dc power supply depicted by the block diagram below.

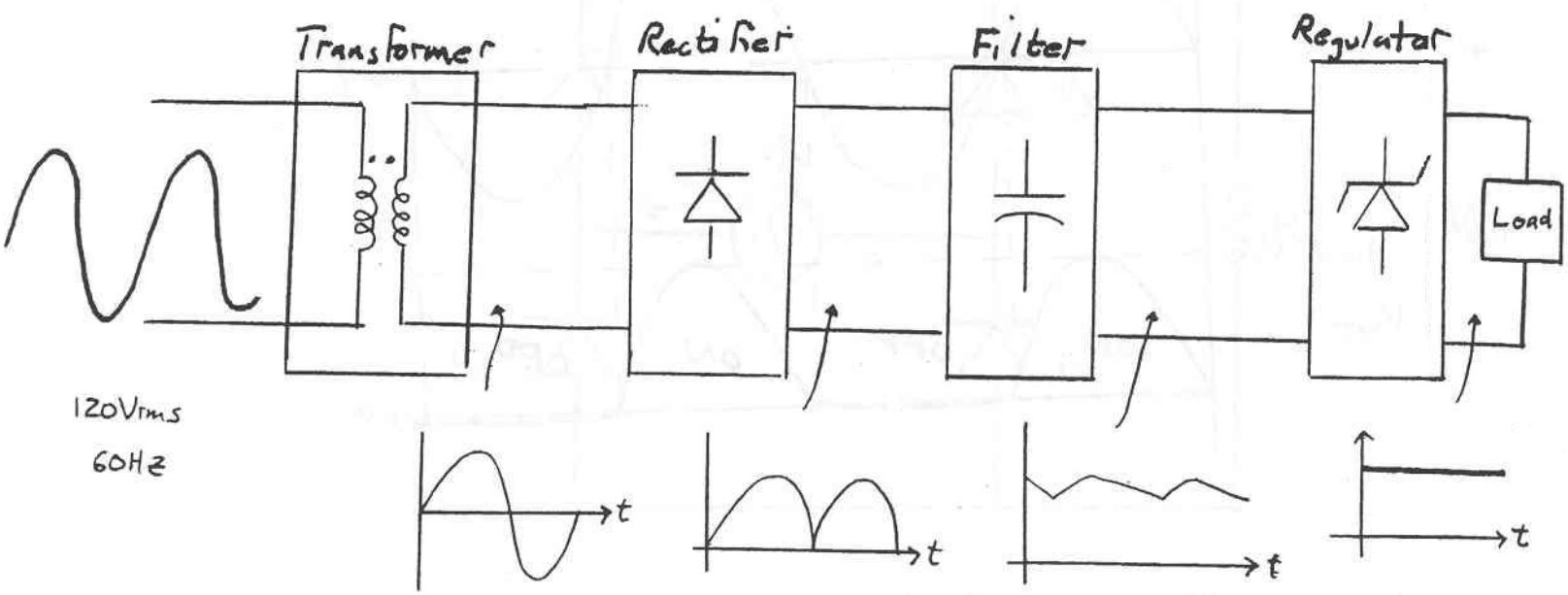

power supply block diagram

Half-wave rectifier with filter

- Previously we examined the filtered half-wave rectifier and determined

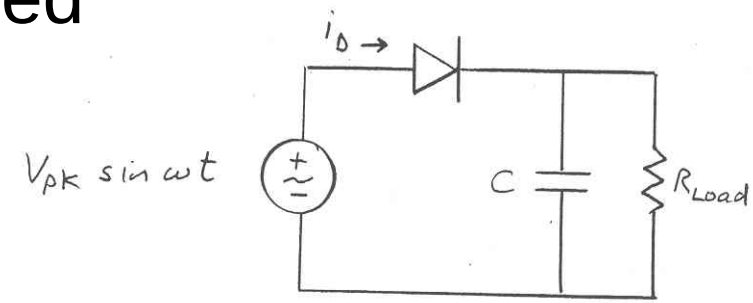

half-wave rectifier with capacitor filtering

$$\gamma = \pi - \tan^{-1}\left(\omega R_{\text{load}} C\right)$$

$$\sin\alpha - \sin(\gamma)e^{-\left(\frac{2\pi+\alpha-\gamma}{\omega R_{\text{load}} C}\right)} = 0$$

$$\Delta v_{\text{out}} = v_{\text{pk}} - v_{\text{pk}}\sin\alpha$$

$$v_{\text{out,ave}} = v_{\text{pk}} - \frac{\Delta v_{\text{out}}}{2}$$

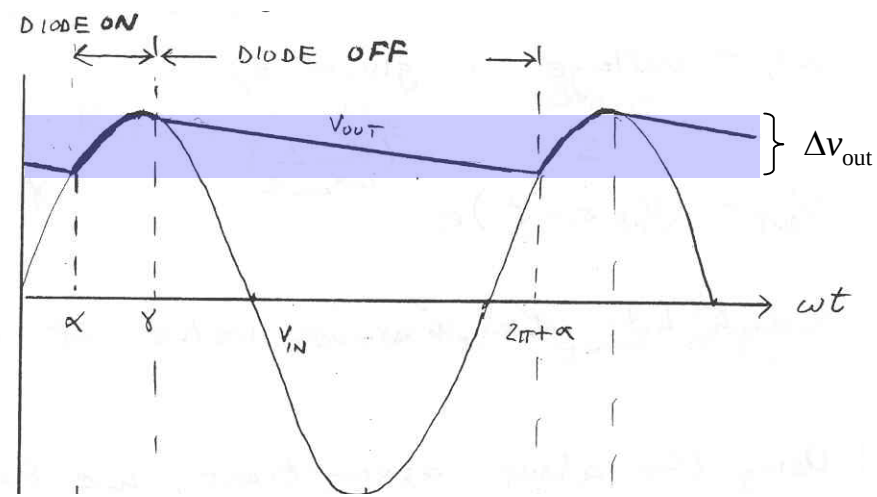

Simplifying filter design

- These equations are cumbersome to use for designing a filter, however we can simplify:
- Assumptions
  - $\omega R_{\text{load}} C$ (time-constant) is typically large, which implies

$$\gamma = \pi - \tan^{-1}\left(\omega R_{\text{load}} C\right) \quad \Rightarrow \quad \gamma \approx \pi - \frac{\pi}{2} \approx \frac{\pi}{2}$$

  - If the diode does not conduct much, then $\alpha \approx \frac{\pi}{2}$
- With the diode off, the minimum output voltage is given

$$v_{\text{out,min}} = \left(v_{\text{pk}} \sin\gamma\right) e^{-\left(\frac{2\pi+\alpha-\gamma}{\omega R_{\text{load}} C}\right)} = \left(v_{\text{pk}} \sin\frac{\pi}{2}\right) e^{-\left(\frac{2\pi+\frac{\pi}{2}-\frac{\pi}{2}}{\omega R_{\text{load}} C}\right)} = v_{\text{pk}} e^{\frac{-2\pi}{\omega R_{\text{load}} C}}$$

Simplifying filter design

- We would like to dispense with the exponential component of our solution, and we can accomplish this using a Taylor series expansion for e^x

$$e^x = 1 + x + \frac{x^2}{2!} + \frac{x^3}{3!} + \cdots + \frac{x^n}{n!} + \cdots$$

- When $\omega R_{\text{load}} C \gg 2\pi$, an acceptable approximation is given by just the first two terms in the series expansion, thus

$$v_{\text{out,min}} = v_{\text{pk}} e^{\frac{-2\pi}{\omega R_{\text{load}} C}} \xrightarrow[\text{for } \omega R_{\text{load}} C \gg 2\pi]{} v_{\text{out,min}} \approx v_{\text{pk}} \left[1 - \frac{2\pi}{\omega R_{\text{load}} C} \right]$$

Simplifying filter design

- Using this simplification, our ripple voltage is now approximated

$$\Delta v_{\text{out}} = v_{\text{pk}} - v_{\text{out,min}} = v_{\text{pk}} - v_{\text{pk}}\left[1 - \frac{2\pi}{\omega R_{\text{load}} C}\right] = v_{\text{pk}} \frac{2\pi}{\omega R_{\text{load}} C} = \frac{v_{\text{pk}}}{f R_{\text{load}} C}$$

where $f = \omega/2\pi$.

- Finally, the average value is found to be

$$v_{\text{out,ave}} \approx v_{\text{pk}} - \frac{\Delta v_{\text{out}}}{2} = v_{\text{pk}} - \frac{v_{\text{pk}}}{2 f R_{\text{load}} C} = v_{\text{pk}}\left(1 - \frac{1}{2 f R_{\text{load}} C}\right)$$

Simplifying filter design

- This simplified equation yields some insights in design.
  - The ripple is largest when R_{load} is smallest.
  - The average output voltage decreases with R_{load} small.
  - The magnitude of the ripple can be made small by making C big.

$$\Delta v_{\text{out}} = \frac{v_{\text{pk}}}{f R_{\text{load}} C}$$

$$v_{\text{out,ave}} \approx v_{\text{pk}} \left(1 - \frac{1}{2 f R_{\text{load}} C} \right)$$

Example Problem 1

Suppose R_{load} varies between 50-Ω and 250-Ω. The input frequency is 60Hz and we desire the minimum average output voltage to be 12V and the maximum ripple is 4V. Determine the required capacitance C and v_{pk}.

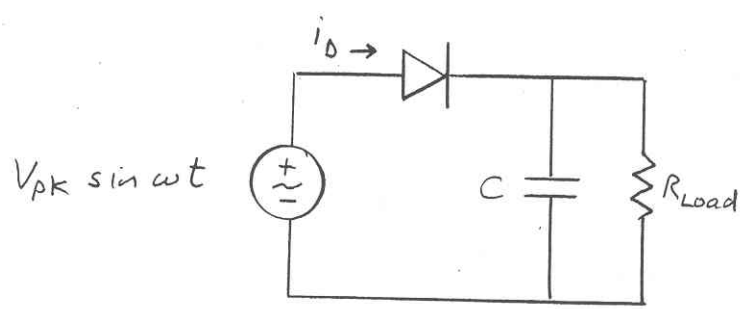

Full-wave rectifier with filter

- Now we examined the filter design for a full-wave rectifier

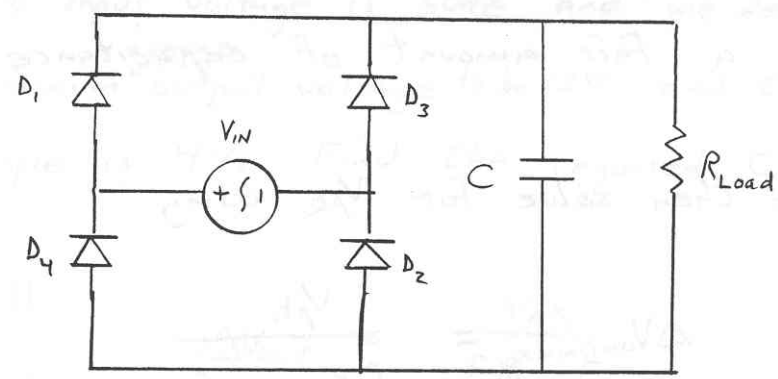

full-wave rectifier with capacitor filtering

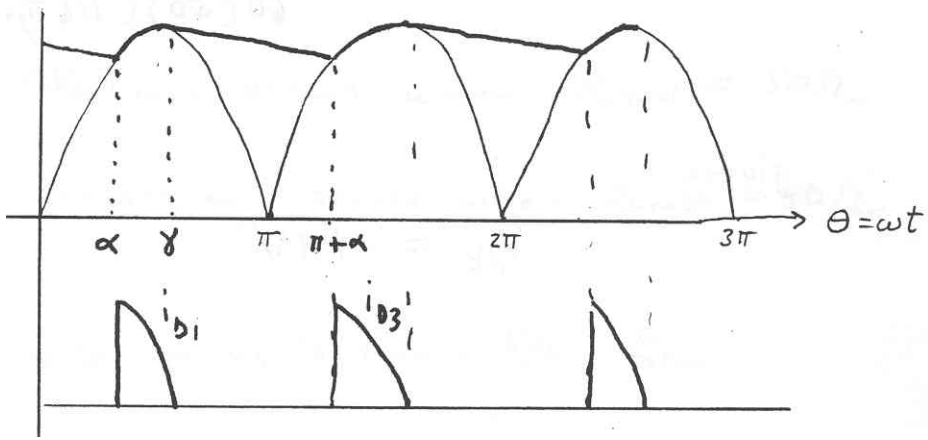

full-wave rectified waveform with capacitor filtering

Full-wave rectifier with filter

- The approximated results of this analysis are given

$$\Delta v_{\text{out}} \approx \frac{v_{\text{pk}}}{2 f R_{\text{load}} C}$$

$$v_{\text{out,ave}} \approx v_{\text{pk}} - \frac{\Delta v_{\text{out}}}{2} = v_{\text{pk}} \left[\frac{4 f R_{\text{load}} C - 1}{4 f R_{\text{load}} C} \right]$$

$$\frac{\Delta v_{\text{out}}}{v_{\text{out,ave}}} \approx \frac{2}{4 f R_{\text{load}} C - 1}$$

- Note that the ripple and hence the required capacitance are reduced by a factor of two.

Example Problem 2
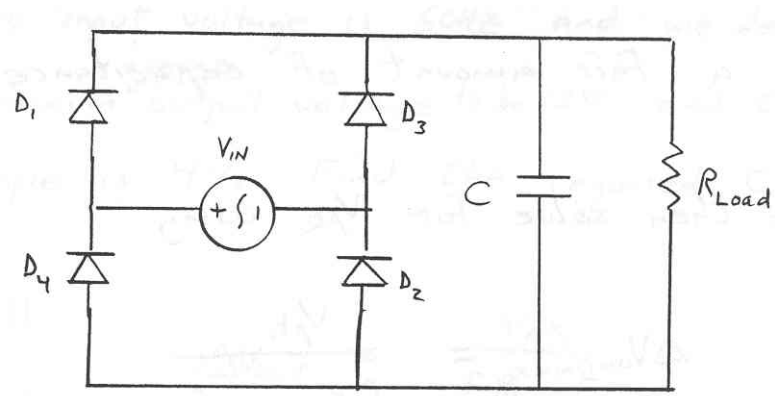
Again, suppose R_{load} varies between 50-Ω and 250-Ω. The input frequency is 60Hz and we desire the minimum average output voltage to be 12V and the maximum ripple is 4V. Determine the required capacitance C and v_{pk} when a full-wave rectifier is employed.