Lesson 37:
Final Exam Review

Exam admin

- Same format as previous exams
  - A few short answer (multiple choice, T/F) questions.
- 3 hours in duration
- Fairly equally weighting of semester's material

Final Review

- DC circuit analysis techniques
- Practical sources and meters
- Op amps
- Linear & DC machines
- Capacitors & inductors (transients)
- AC circuit analysis
- AC power and power factor correction
- 3-phase circuits
- Synchronous machines
- Rectifiers, filtering and zener diodes

Circuit analysis techniques

Ohm's law

Series resistance

Voltage divider rule

Nodal analysis

Thévenin's theorem

KVL

Meters

Circuit analysis toolbox

KCL

Parallel resistance

Current divider

Source transformation

Ideal meters

- For accurate measurement, meters should not affect the parameters being measured.
  - An ideal **ammeter** should have no voltage drop across it and hence no resistance.
  - An ideal **voltmeter** should shunt no current through it and hence infinite resistance.

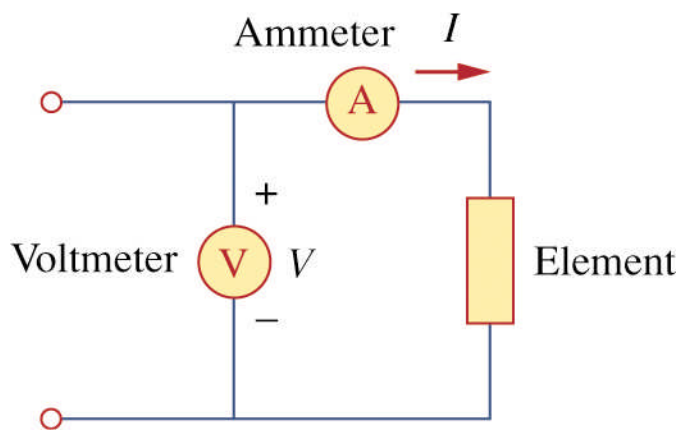

Practical voltage sources

- A real or **practical** source supplies its rated voltage when its terminals are not connected to a load (open-circuited) but its voltage drops off as the current it supplies increases.

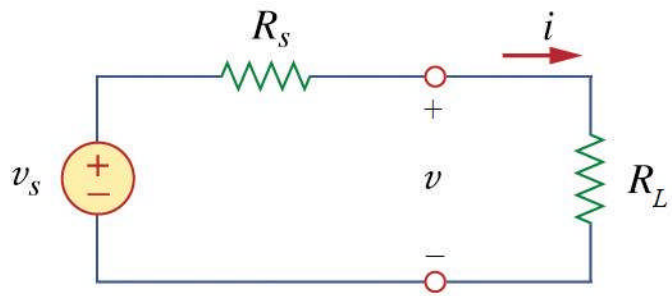

Nodal analysis steps

- In nodal analysis we are interested in finding **node voltages**.

- Given a circuit with n nodes,
  1. Select a reference node. Assign voltages $v_1, v_2, \ldots, v_{n-1}$ to the remaining n-1 nodes.
  2. Apply KCL to each n-1 node expressing branch currents in terms of node voltages.
  3. Solve the resulting simultaneous equations to obtain unknown node voltages.

Example Problem 1

Calculate the node voltages in the circuit below.

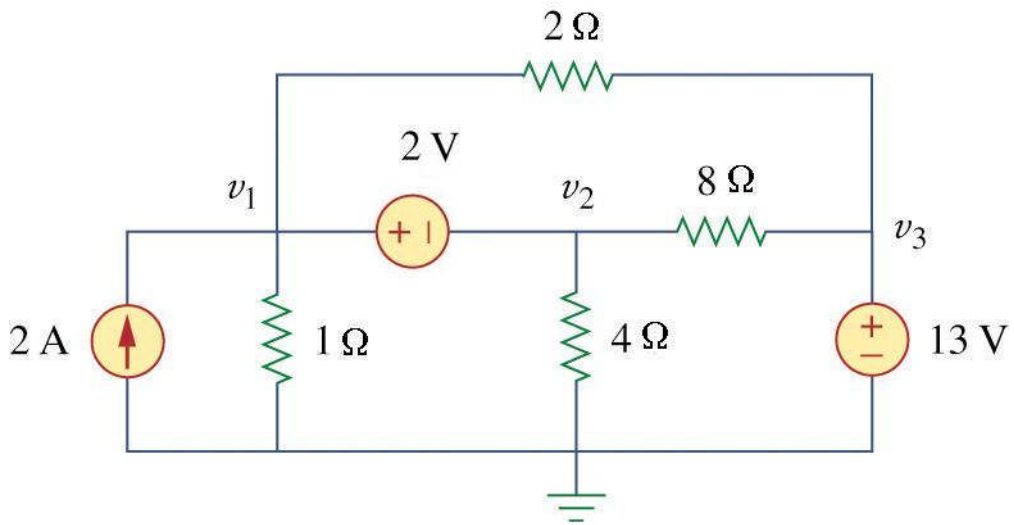

Thévenin's theorem

- **Thévenin's theorem** states that a linear two-terminal circuit can be replaced by an equivalent circuit consisting of a voltage source V_{Th} in series with a resistor R_{Th} where
  - V_{Th} is the open circuit voltage at the terminals, and
  - R_{Th} is the input or equivalent resistance at the terminals when the independent sources are turned off.

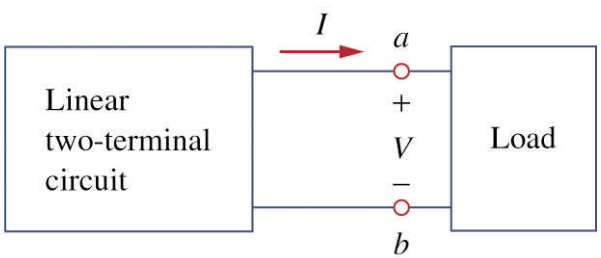

original circuit

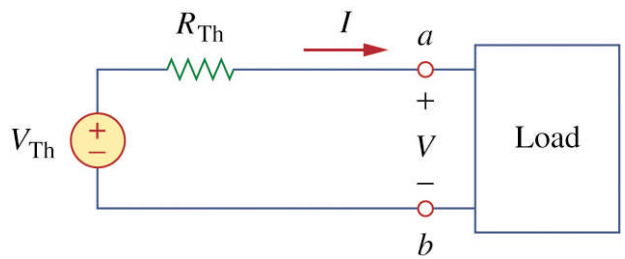

Thévenin equivalent circuit

Example Problem 2

Find the Thévenin equivalent circuit to the left of terminals a-b. Then find the current through R_L = 6, 16, and 36 Ω.

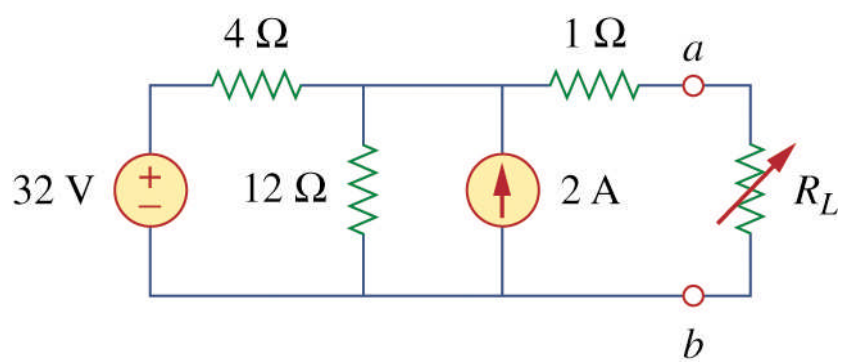

Maximum power transfer theorem

- **Maximum power** is transferred to the load when the load resistance equals the Thévenin resistance as seen from the load ($R_L = R_{\text{Th}}$).

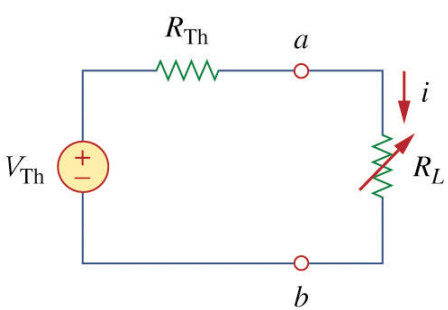

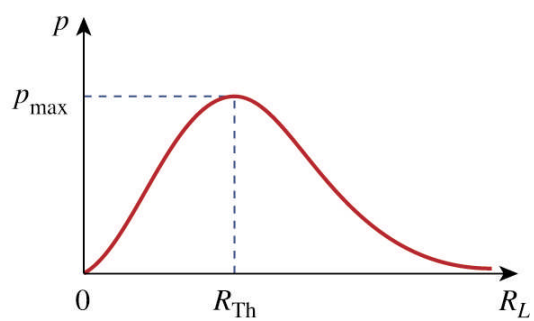

- The power delivered when $R_L = R_{\text{Th}}$ is $p_{\max} = \dfrac{V_{\text{Th}}^2}{4R_{\text{Th}}}$
- The efficiency (η)

$$\eta = \frac{p_{\text{out}}}{p_{\text{in}}} \times 100\% = 50\%$$

Operational amplifier

- An **operational amplifier** (op amp) is an active circuit element designed to perform mathematical operations of addition, subtraction, multiplication, division differentiation, and integration.

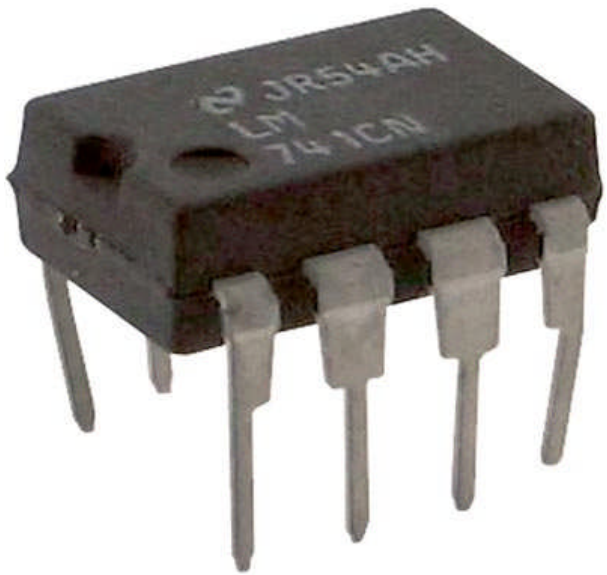

Ideal op amp

- We can simplify the analysis of op amp circuit by using an **ideal op amp** model.
- Ideal op amp assumptions:
  - Input currents (i_1, i_2) are zero.
  - The voltage across the input terminals is zero .

$$v_d = v_2 - v_1 = 0 \quad \text{or} \quad v_1 = v_2$$

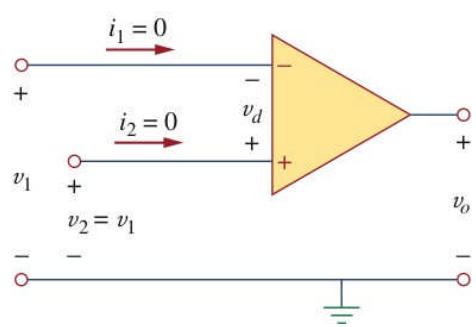

Basic op amp circuits

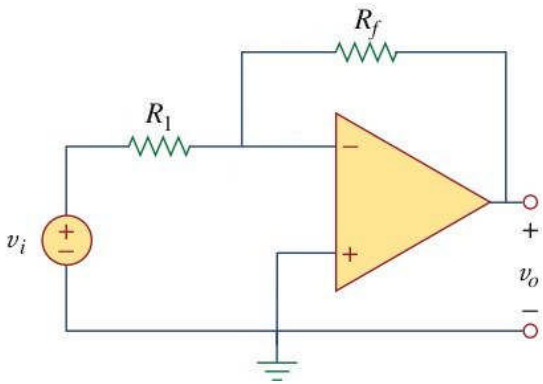

Inverting amplifier

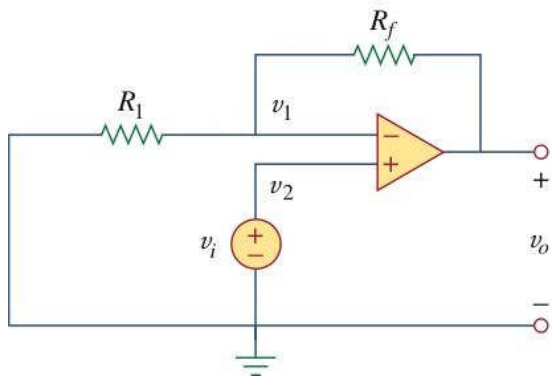

Non-inverting amplifier

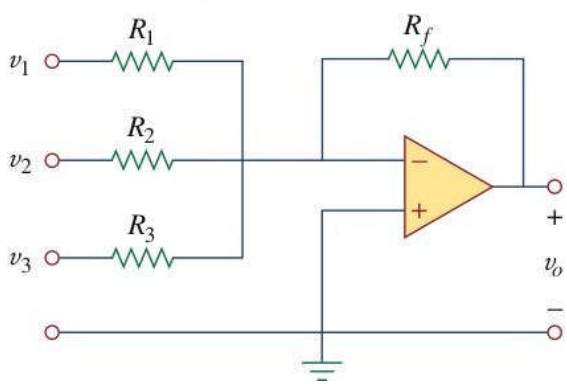

Summer

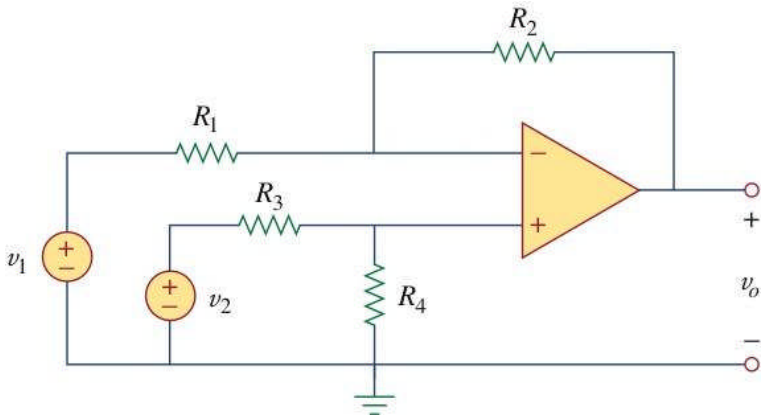

Difference amplifier

Example Problem 3

Determine i_x and i_y below.

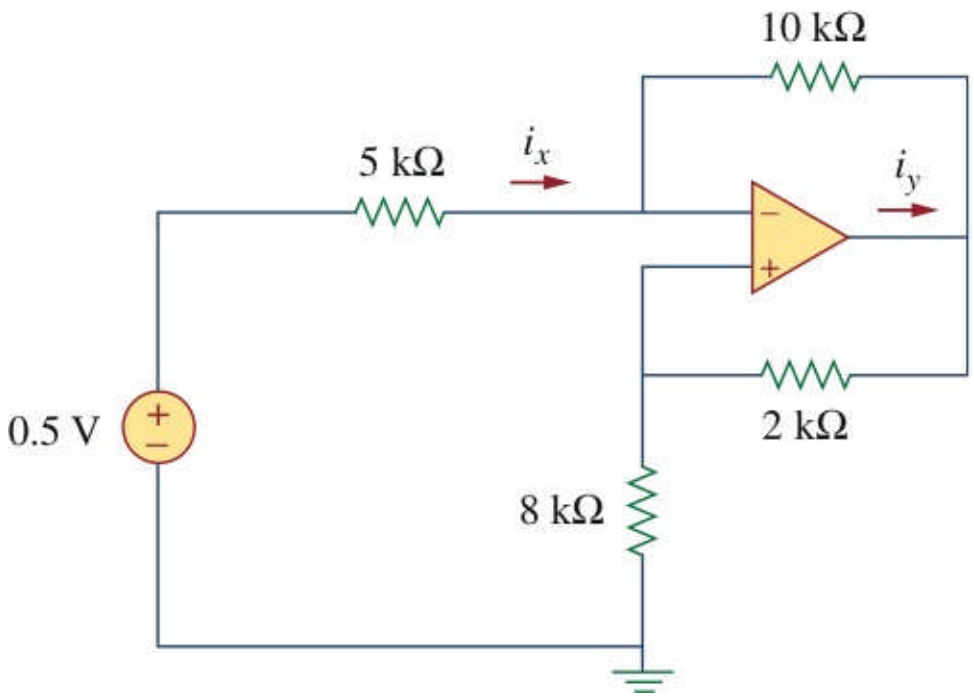

Linear motor summary

$f = i_A lB$ force exerted on bar due to current i_A

$e_A = Blu$ induced voltage due to velocity of bar v

$i_A = \dfrac{V_T - e_A}{R_A}$ current in the bar

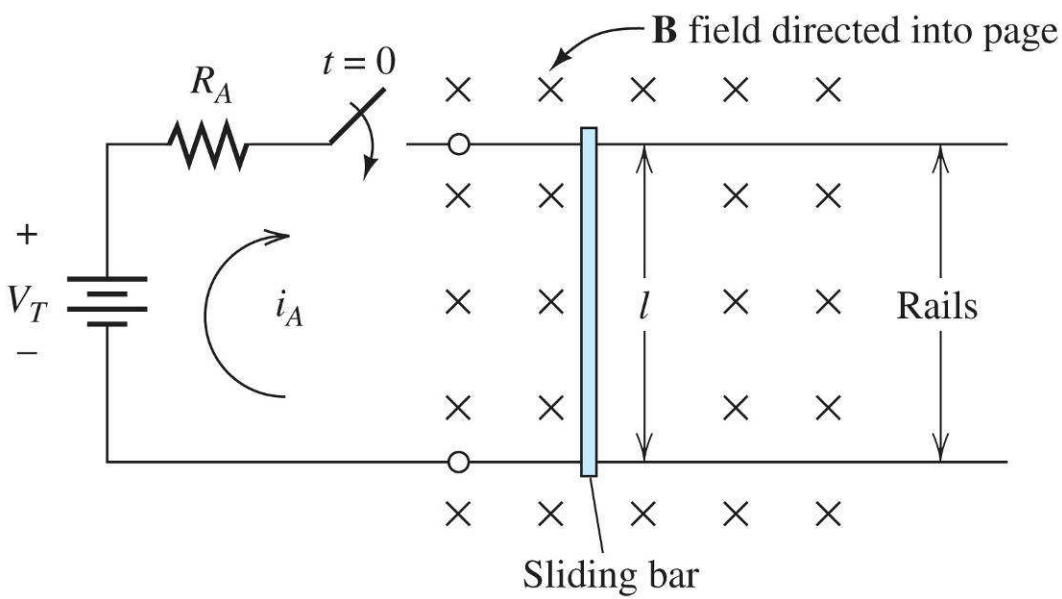

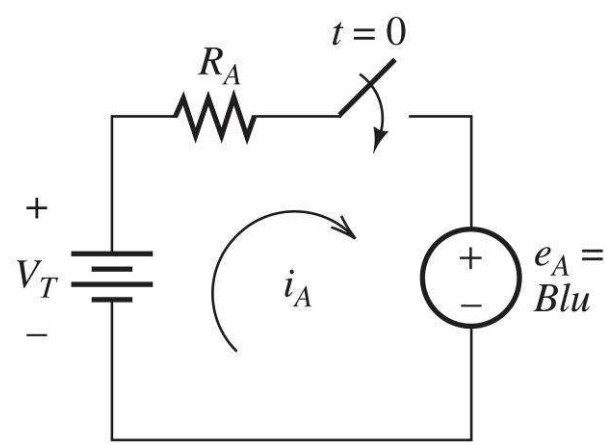

Rotating dc motor summary

$T_{dev} = K_v i_A$ torque developed due to current i_A

$e_A = K_v \omega_m$ back emf due to rotational velocity ω_m

$i_A = \dfrac{V_T - e_A}{R_A}$ armature current

$T_{\text{out}} = T_{\text{dev}} - T_{\text{loss}}$ output torque

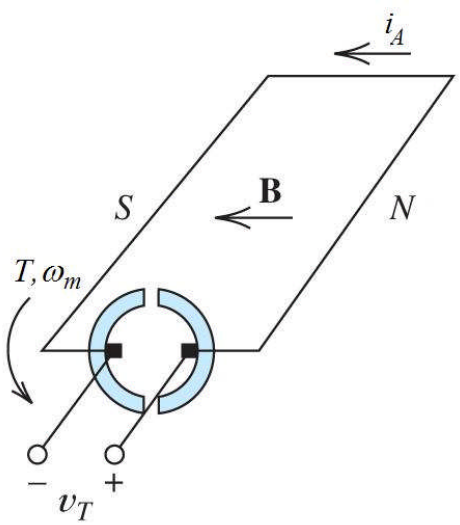

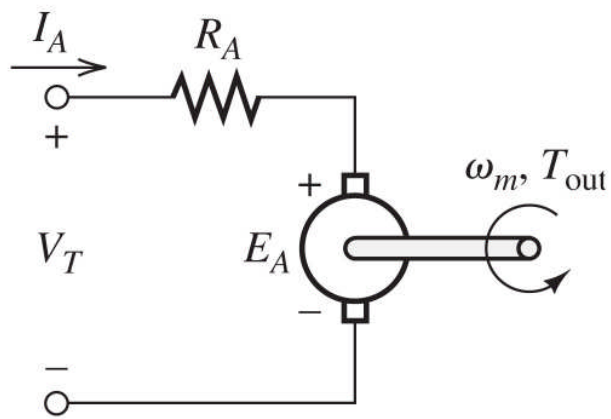

Example Problem 4

A 120-V permanent magnet DC motor tested under two conditions: loaded and unloaded. Without a load the speed of the motor ω_m is 160 rad/s and I_A is 1 A. With a load, the speed of the motor ω_m is 148.6 rad/s and I_A is 2 A. Solve for R_a , K_v and T_{loss}.

Capacitor properties

1. When capacitor voltage is not changing in time (dc voltage), capacitor current is zero.

   A capacitor is an **open circuit** to dc.

2. Capacitor voltage must be continuous (i.e., no instantaneous changes in voltage)
3. Ideal capacitors do not dissipate energy.
4. Capacitors store energy in their electric field.

Capacitors in parallel

The equivalent capacitance of N parallel-connected capacitors is the sum of the individual capacitances.

$$C_{\text{eq}} = C_1 + C_2 + C_3 + \cdots + C_N$$

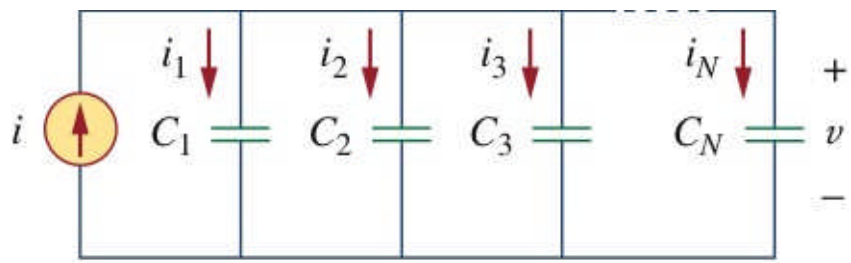

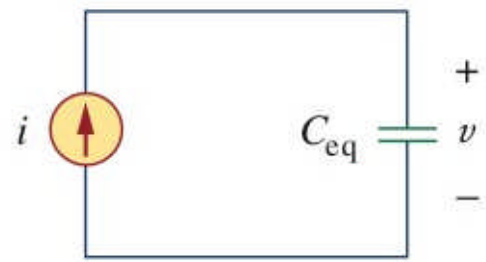

Capacitors in series

The equivalent capacitance of N capacitors connected in series is the reciprocal of the sum of the reciprocals of the individual capacitances.

$$\frac{1}{C_{\text{eq}}} = \frac{1}{C_1} + \frac{1}{C_2} + \frac{1}{C_3} + \cdots + \frac{1}{C_N}$$

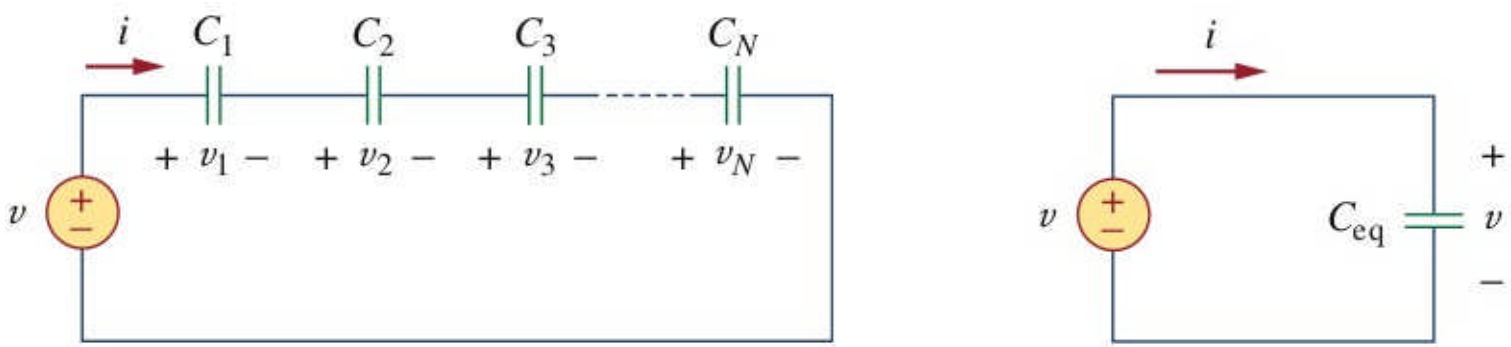

Inductor properties

1. When inductor current is not changing in time (dc) inductor voltage is zero.

   An inductor is a **short circuit** to dc.

2. Inductor current must be continuous (i.e., no instantaneous changes in current)
3. Ideal inductors do not dissipate energy.
4. Inductors store energy in their magnetic field.

Inductors in series

The equivalent inductance of N inductors connected in series is the sum of the individual inductances.

$$L_{\text{eq}} = L_1 + L_2 + L_3 + \cdots + L_N$$

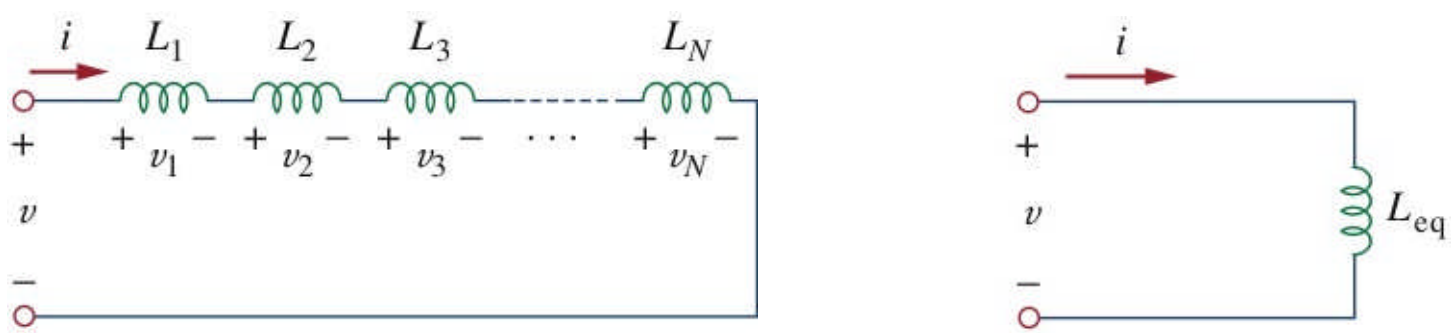

Inductors in parallel

The equivalent inductance of N inductors connected in parallel is the reciprocal of the sum of the reciprocals of the individual inductances.

$$\frac{1}{L_{\text{eq}}} = \frac{1}{L_1} + \frac{1}{L_2} + \frac{1}{L_3} + \cdots + \frac{1}{L_N}$$

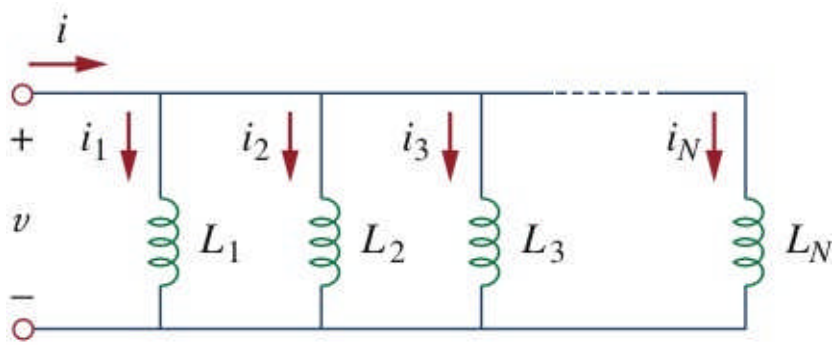

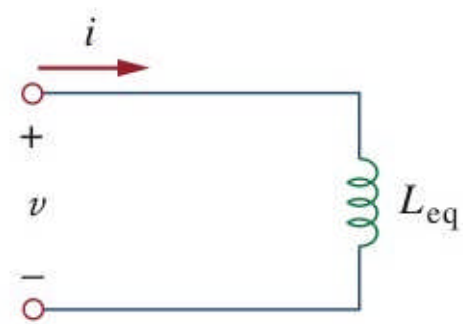

Example Problem 5

Under dc conditions find i, v_C, and i_L. Also, determine the energy stored in the capacitor and inductor.

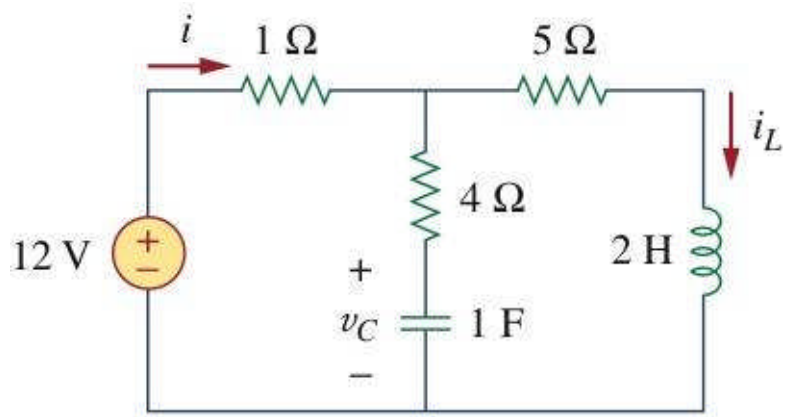

Evaluating RC or RL circuits

1. Determine initial capacitor voltage $v(0)$ or initial inductor current $i(0)$.
2. Determine final capacitor voltage $v(\infty)$ or final inductor current $i(\infty)$.
3. Find the time constant $\tau = RC$ or $\tau = L/R$.

capacitors

$$v(t) = v(\infty) + [v(0) - v(\infty)]e^{-t/\tau}$$

inductors

$$i(t) = i(\infty) + [i(0) - i(\infty)]e^{-t/\tau}$$

Example Problem 6

The switch in the circuit below has been in position A for a long time. At $t = 0$, the switch moves to B. Determine $v(t)$ for $t \geq 0$ and calculate its value at $t = 2$ and 4 sec.

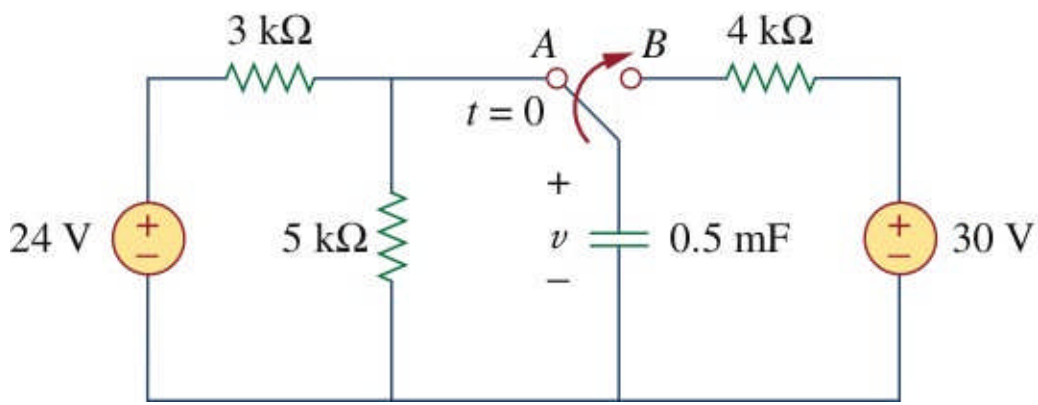

Sinusoids

- The general form of a sinusoid is .

$$v(t) = V_m \sin \omega t$$

where

$V_m =$ the *amplitude* of the sinusoid

$\omega =$ the *angular frequency* in radians/s

$\omega t =$ the *argument* of the sinusoid

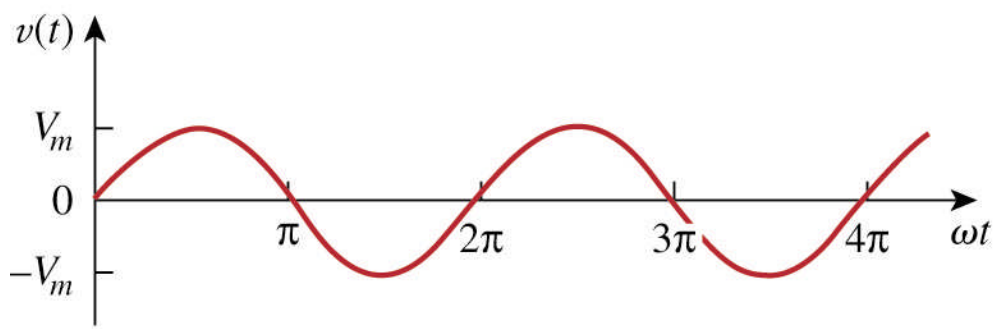

Root mean square (rms) value

$$V_{\text{rms}} = \sqrt{\frac{1}{T}\int_0^T v^2(t)\,dt}$$

root **mean** **square**

The **effective value** or **root mean square (rms) value** of a periodic function is the dc value that delivers the same average power to a resistor as the periodic function .

RMS value of a sinusoid

- What is the rms value of the sinusoidal current $i(t) = I_m \sin \omega t$?

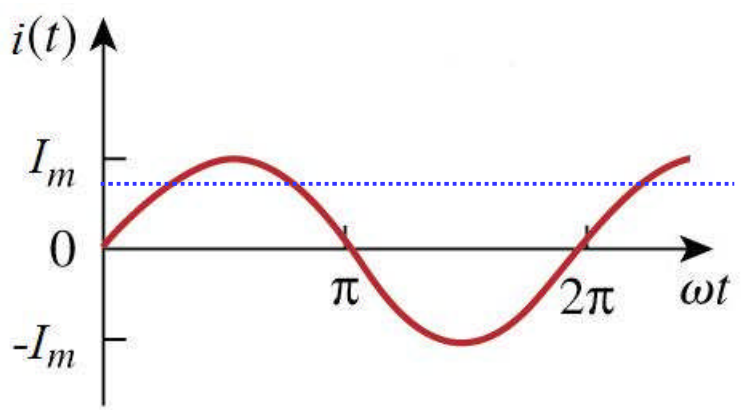

$$I_{\text{rms}} = \frac{I_m}{\sqrt{2}} = 0.707 I_m$$

$$I_{\text{rms}} = \sqrt{\frac{1}{T}\int_0^T I_m^2 \cos^2 \omega t}$$

$$= \sqrt{\frac{I_m^2}{T}\int_0^T \frac{1}{2}(1+\cos 2\omega t)\, dt} = \frac{I_m}{\sqrt{2}}$$

Summary of phasor relations

TABLE 9.2 Summary of voltage-current relationships.

Element	Time domain	Frequency domain
R	$v = Ri$	$\mathbf{V} = R\mathbf{I}$
L	$v = L\dfrac{di}{dt}$	$\mathbf{V} = j\omega L\mathbf{I}$
C	$i = C\dfrac{dv}{dt}$	$\mathbf{V} = \dfrac{\mathbf{I}}{j\omega C}$

Impedances of passive elements

TABLE 9.3

Impedances and admittances of passive elements.

Element	Impedance	Admittance
R	$\mathbf{Z} = R$	$\mathbf{Y} = \frac{1}{R}$
L	$\mathbf{Z} = j\omega L$	$\mathbf{Y} = \frac{1}{j\omega L}$
C	$\mathbf{Z} = \frac{1}{j\omega C}$	$\mathbf{Y} = j\omega C$

Impedance

- Impedance may also be expressed in polar form

$$\mathbf{Z} = |\mathbf{Z}| \angle \theta$$

- Since $\mathbf{Z} = R + jX = |\mathbf{Z}| \angle \theta$

$$|\mathbf{Z}| = \sqrt{R^2 + X^2}, \quad \theta = \tan^{-1} \frac{X}{R}$$

$$R = |\mathbf{Z}| \cos\theta, \quad X = |\mathbf{Z}| \sin\theta$$

Average power with RMS values

- Consider the element below with $v(t)$ and $i(t)$ given

$$v(t) = V_m \cos(\omega t + \theta_v)$$

$$i(t) = I_m \cos(\omega t + \theta_i)$$

- Average power delivered to the load is

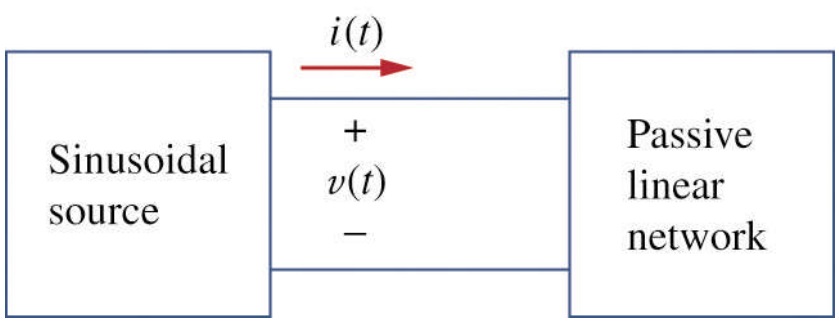

$$P = \frac{1}{2} V_m I_m \cos(\theta_v - \theta_i)$$

$$= \frac{V_m}{\sqrt{2}} \frac{I_m}{\sqrt{2}} \cos(\theta_v - \theta_i)$$

$$= V_{\text{rms}} I_{\text{rms}} \cos(\theta_v - \theta_i)$$

Power factor angle

- If $\theta_v - \theta_i > 0^o$ power factor is said to be **lagging** because current lags voltage.
  - Lagging power factor implies an inductive load.
- If $\theta_v - \theta_i < 0^o$ power factor is said to be **leading** because current leads voltage.
  - Leading power factor implies a capacitive load.

ICE

Current (**I**) leads voltage(**E**) in a capacitor (**C**)

ELI

Voltage (**E**) leads current (**I**) in an inductor (**L**)

Power triangle

Complex Power

$$\mathbf{S} = P + jQ = \frac{1}{2}\mathbf{V}\mathbf{I}^*$$
$$= V_{\text{rms}} I_{\text{rms}} \angle(\theta_v - \theta_i)$$

Apparent Power (VA)

$$S = |\mathbf{S}| = V_{\text{rms}} I_{\text{rms}} = \sqrt{P^2 + Q^2}$$

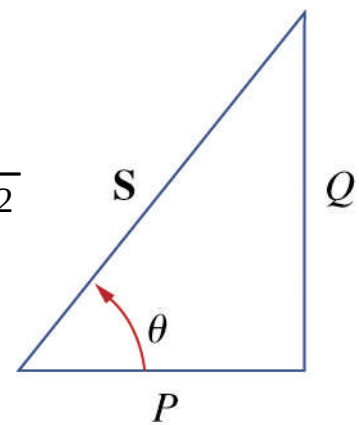

Reactive Power (VAR)

$$Q = \text{Im}(\mathbf{S}) = S\sin(\theta_v - \theta_i)$$

Real Power (watts)

$$P = \text{Re}(\mathbf{S}) = S\cos(\theta_v - \theta_i)$$

Leading/lagging in power triangle

- The power triangle's orientation depends on the sign of Q (which depends on the load $\mathbf{Z}$)

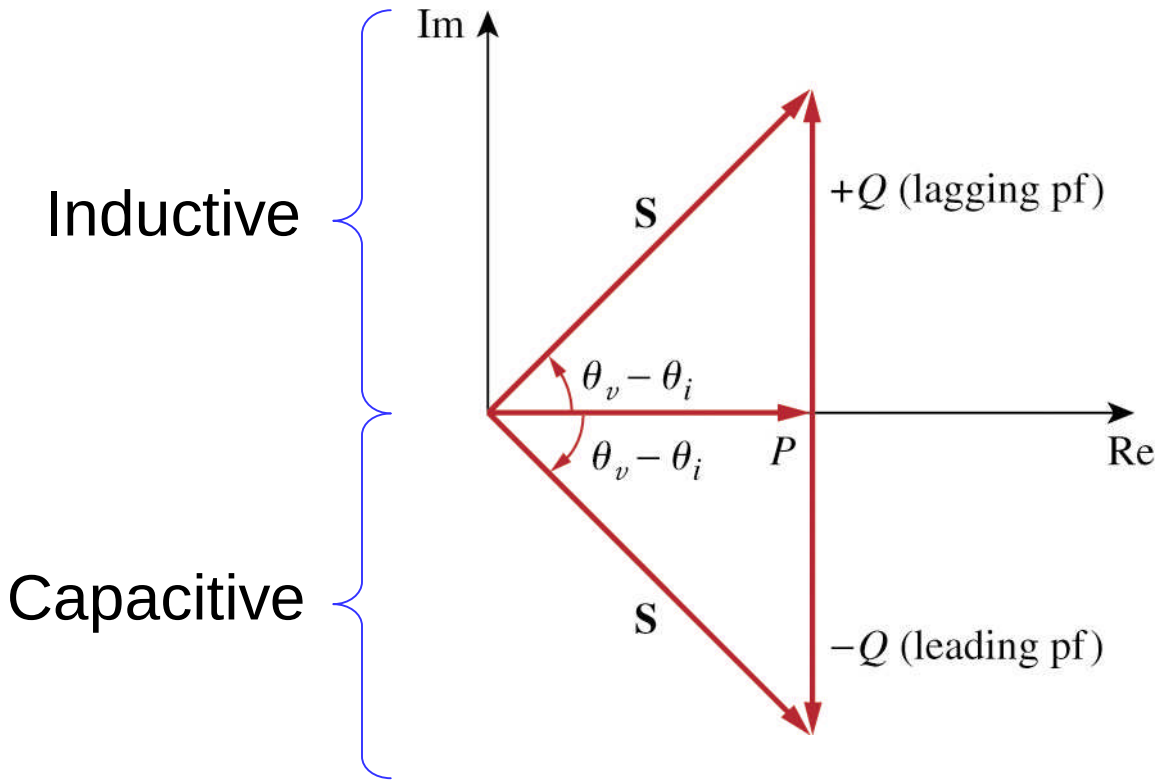

Power factor correction

Before correction

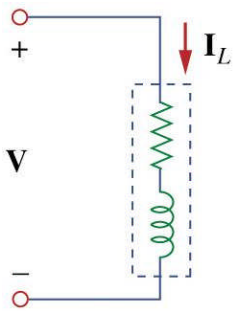

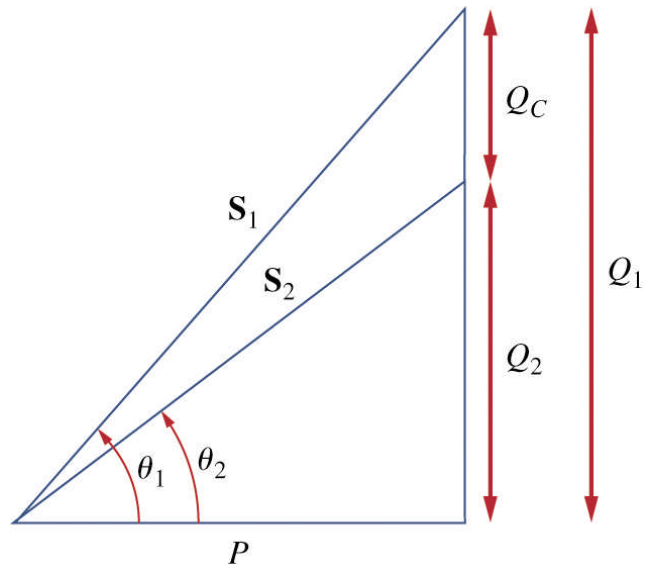

After correction

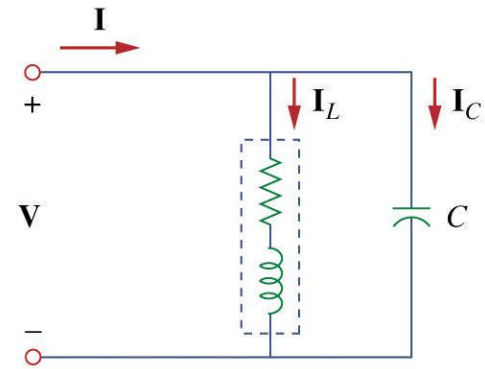

$$P = S_1 \cos\theta_1$$

$$Q_1 = S_1 \sin\theta_1 = P\tan\theta_1$$

$$P = S_2 \cos\theta_2$$

$$Q_2 = S_2 \sin\theta_2 = P\tan\theta_2$$

$$Q_C = Q_1 - Q_2 = P(\tan\theta_1 - \tan\theta_2)$$

$$C = \frac{Q_C}{\omega V_{\text{rms}}^2}$$

Example Problem 7

When connected to a 120-Vrms, 60-Hz power line, a load absorbs 4 kW at a lagging power factor of 0.8. Find the value of capacitance necessary to raise the pf to 0.95.

Fixed capacitors for power factor correction

Balanced Y-Y connection

- A balanced Y-Y system.

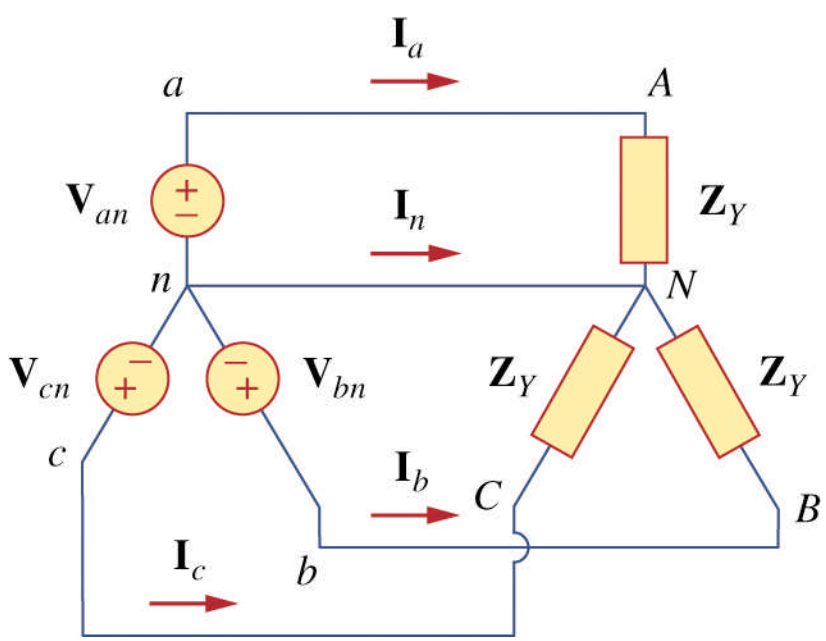

Line voltages

- Line voltage are $\sqrt{3}$ times larger and lead their respective phase voltages by 30°.

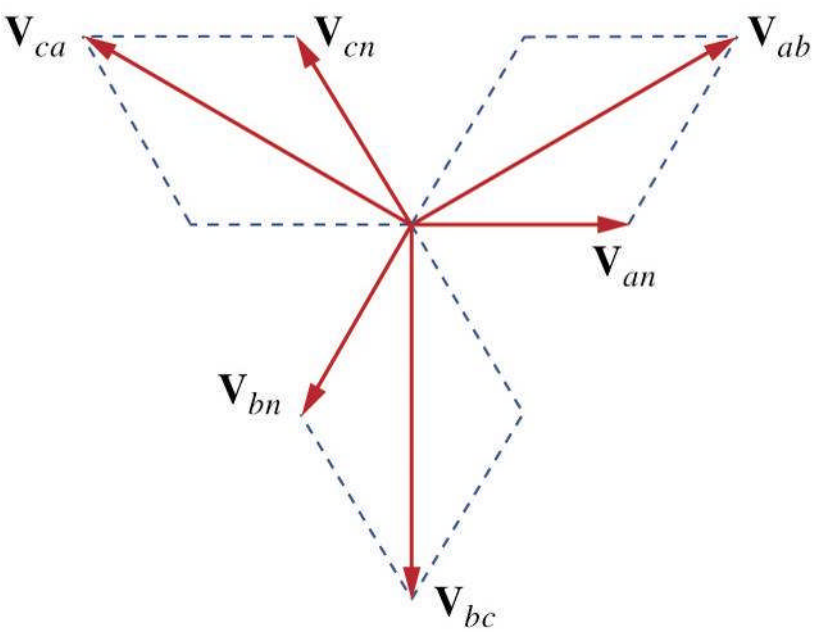

$$\mathbf{V}_{ab} = \mathbf{V}_{an} - \mathbf{V}_{bn} = \sqrt{3}V_P\angle 30°$$

$$\mathbf{V}_{bc} = \sqrt{3}V_P\angle -90°$$

$$\mathbf{V}_{ca} = \sqrt{3}V_P\angle -210°$$

Balanced Y-Δ connection

- In a balanced Y-Δ connection, the currents through each phase of the load ($\mathbf{I}_{AB}$, $\mathbf{I}_{BC}$, $\mathbf{I}_{CA}$) are not the same as the line currents ($\mathbf{I}_a$, $\mathbf{I}_b$, $\mathbf{I}_c$).

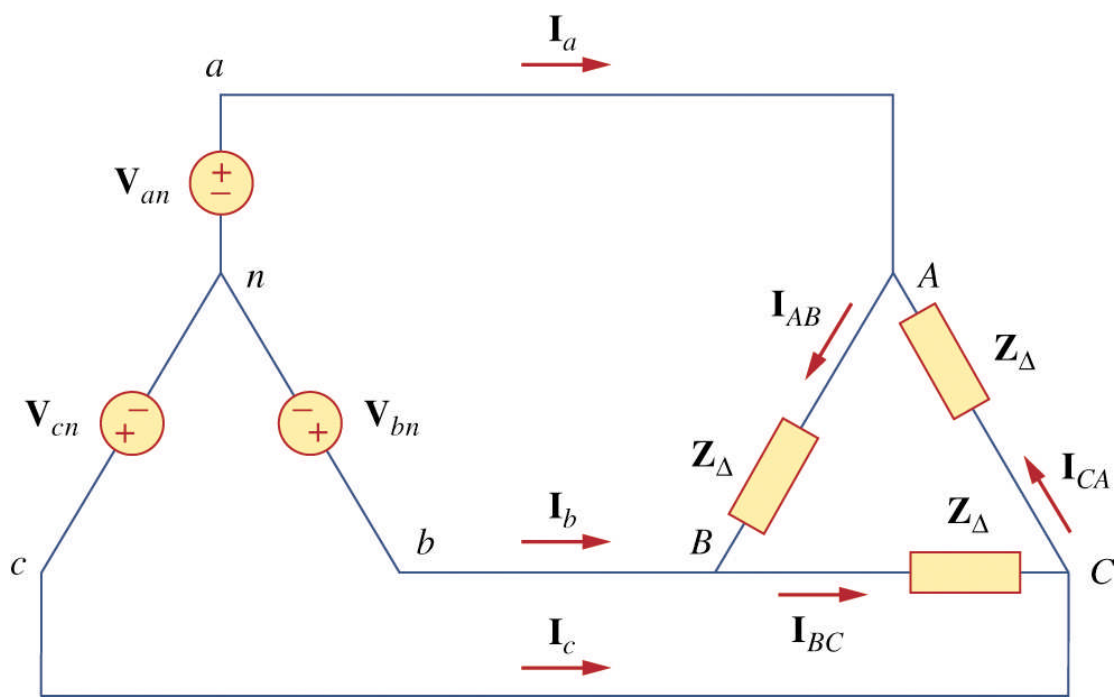

Line currents

- Line currents are $\sqrt{3}$ times larger and lag their respective phase currents by 30°.

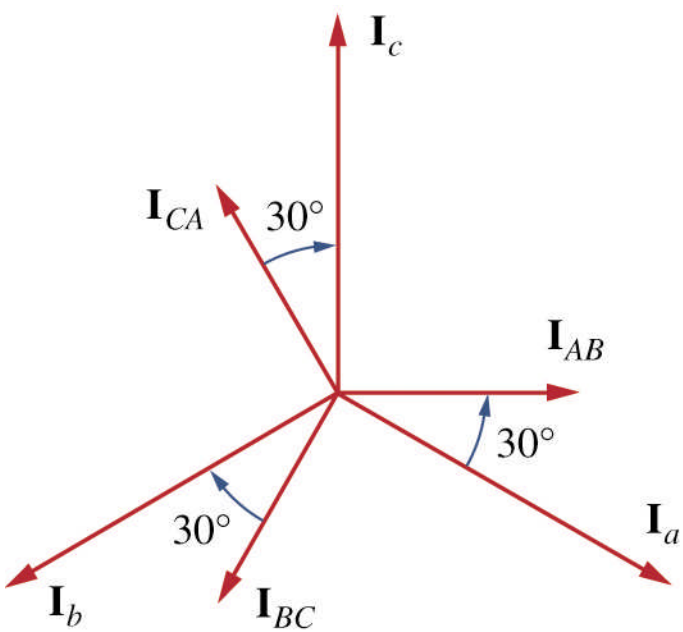

$$\mathbf{I}_a = \sqrt{3}\mathbf{I}_{AB}\angle -30°$$

$$\mathbf{I}_b = \sqrt{3}\mathbf{I}_{AB}\angle -150°$$

$$\mathbf{I}_c = \sqrt{3}\mathbf{I}_{AB}\angle -270°$$

Single-phase equivalent

- In analyzing a balanced Y-Δ, we can transform the load to form an equivalent Y-Y system.

$$\mathbf{Z}_Y = \frac{\mathbf{Z}_\Delta}{3}$$

- Then a single phase can be examined to determine the phase current.

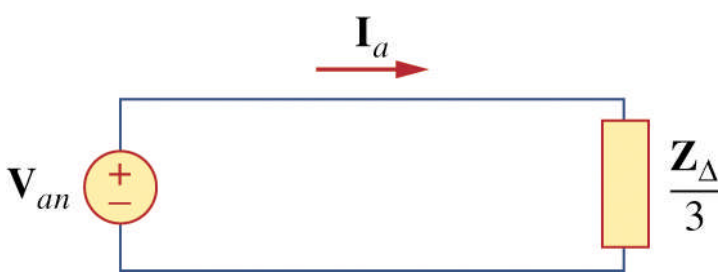

Example Problem 8

A balanced *abc*-sequence Y-connected source with $\mathbf{V}_{an} = 1000\angle 10°$ V is connected to a Δ-connected balanced load $(8 + j4)\ \Omega$ per phase. Calculate the phase and line currents.

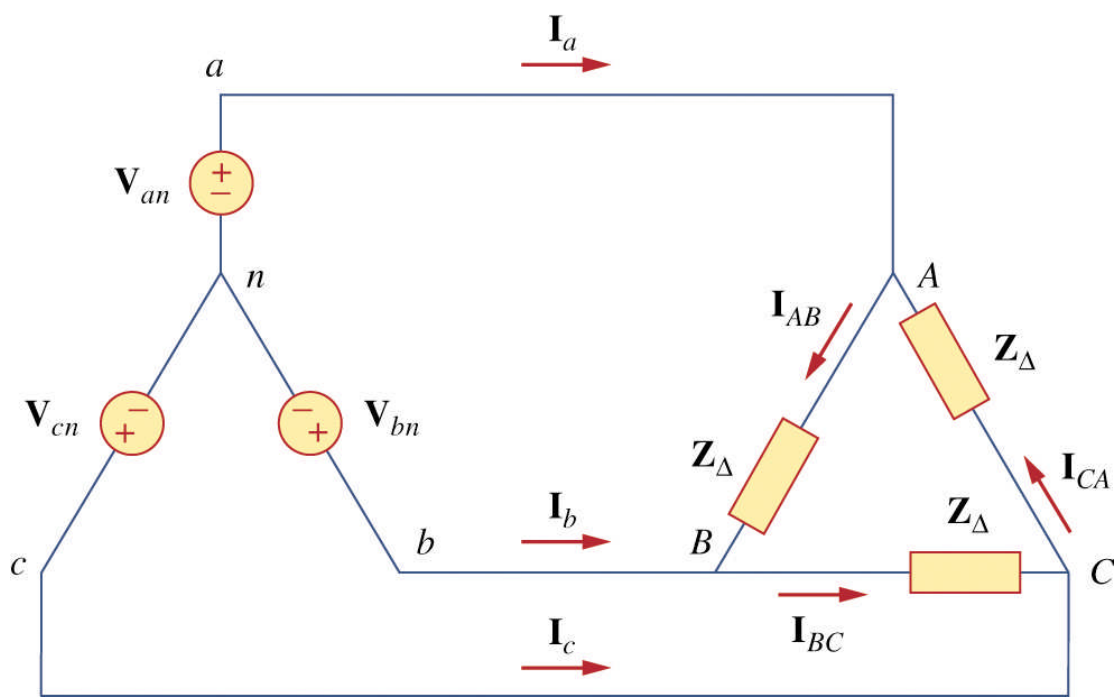

Powers per phase

- Since the total instantaneous power isn't a function of time, the average power per phase is

$$P_P = V_P I_P \cos\theta$$

- Likewise, the reactive and apparent power is

$$Q_P = V_P I_P \sin\theta \quad S_P = V_P I_P$$

- The complex power per phase is

$$\mathbf{S}_P = P_P + jQ_P = \mathbf{V}_P \mathbf{I}_P^*$$

Total powers

- In terms of line voltages and currents, recall

$$\text{Y-loads} \qquad V_L = \sqrt{3}V_P \qquad I_L = I_P$$

$$\Delta\text{-loads} \qquad V_L = V_P \qquad I_L = \sqrt{3}I_P$$

thus the total real and reactive power is given

$$P = P_a + P_b + P_c = 3V_P I_P \cos\theta = \sqrt{3}V_L I_L \cos\theta$$

$$Q = Q_a + Q_b + Q_c = 3V_P I_P \sin\theta = \sqrt{3}V_L I_L \sin\theta$$

Total complex power

- The total complex power is

$$\mathbf{S} = 3\mathbf{S}_P = 3\mathbf{V}_P\mathbf{I}_P^* = 3I_P^2\mathbf{Z}_P = \frac{3V_P^2}{\mathbf{Z}^*}$$

where the load impedance per phase is $\mathbf{Z}_P = Z\angle\theta$.

- Using line voltages, we could write

$$\mathbf{S} = P + jQ = \sqrt{3}V_L I_L \angle\theta$$

Example Problem 9

Two balance loads are connected to a 240-kV rms, 60-Hz line. Load 1 draws 30 kW (pf=0.6 lagging) while load 2 draws 45 kVAR (pf=0.8 lagging). Assuming the *abc* sequence determine the (a) the complex, real and reactive powers absorbed by the load, (b) the line currents, and (c) the kVAR rating of the 3 capacitors Δ-connected in parallel that will raise the pf to 0.9 lagging and the capacitance of each capacitor.

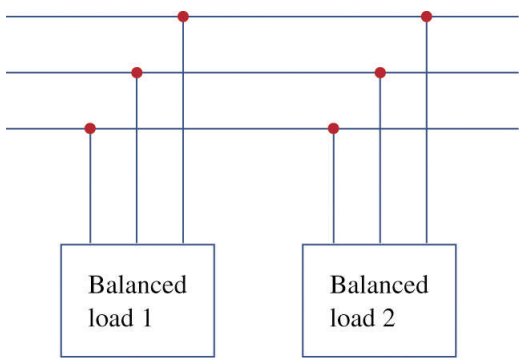

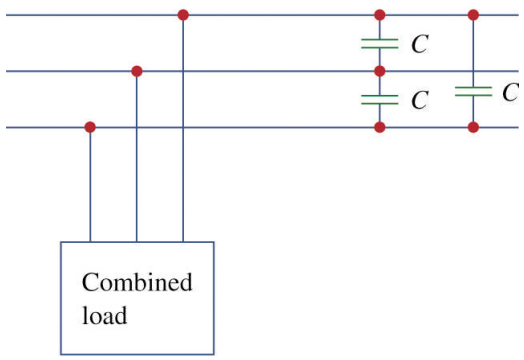

Turns ratio n

- The turns ratio or transformation ratio of the number of windings N_2 to N_1, and thus the voltages $\mathbf{V}_2$ to $\mathbf{V}_1$.

$$\frac{\mathbf{V}_2}{\mathbf{V}_1} = \frac{N_2}{N_1} = n$$

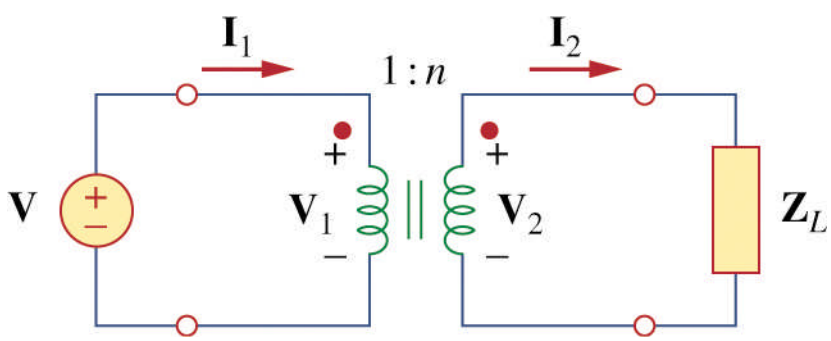

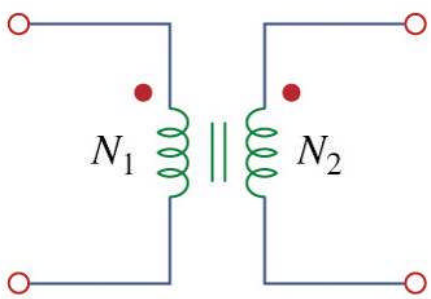

circuit symbol for ideal transformer

Transformer currents

- Given that an ideal transformer has no power losses,

$$v_1 i_1 = v_2 i_2, \text{ thus } \frac{\mathbf{I}_2}{\mathbf{I}_1} = \frac{\mathbf{V}_1}{\mathbf{V}_2} = \frac{N_1}{N_2} = \frac{1}{n}$$

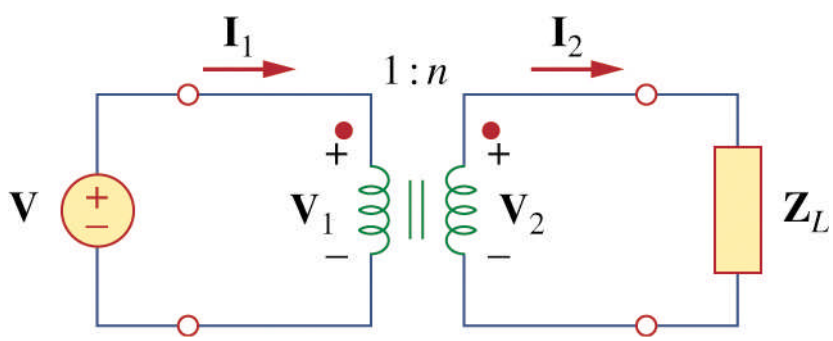

Complex power

- Applying conservation of power, the complex power delivered to the primary winding must also be delivered to the secondary.

$$\mathbf{S}_1 = \mathbf{V}_1\mathbf{I}_1^* = \frac{\mathbf{V}_2}{n}(n\mathbf{I}_2)^* = \mathbf{V}_2\mathbf{I}_2^* = \mathbf{S}_2$$

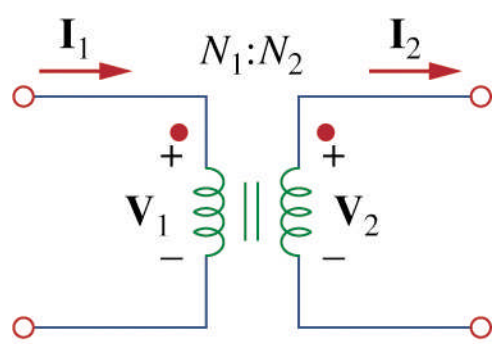

Reflected impedance

- The input impedance is also called the **reflected impedance** and is often used in impedance matching.

$$\mathbf{Z}_{\text{in}} = \frac{\mathbf{V}_1}{\mathbf{I}_1} = \frac{\mathbf{V}_2}{n}\frac{1}{n\mathbf{I}_2} = \frac{1}{n^2}\frac{\mathbf{V}_2}{\mathbf{I}_2} = \frac{1}{n^2}\mathbf{Z}_{\text{L}}$$

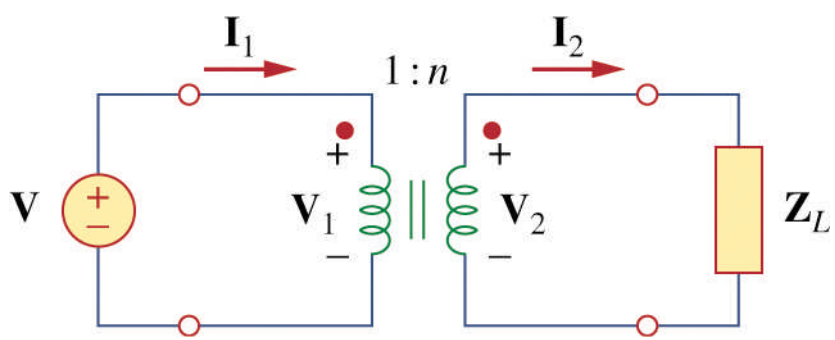

Example Problem 10

For the ideal transformer below find

a. the source current $\mathbf{I}_1$

b. the output voltage $\mathbf{V}_o$

c. the complex power supplied by the source

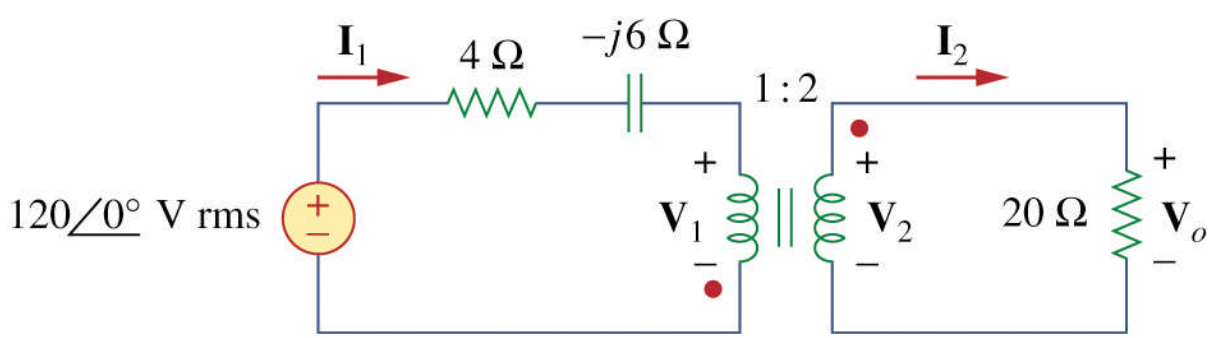

AC Synchronous Generator

- Per-phase equivalent

$$\tilde{E}_a = \frac{L_{SF} I_F \omega_e}{\sqrt{2}} \angle \delta$$

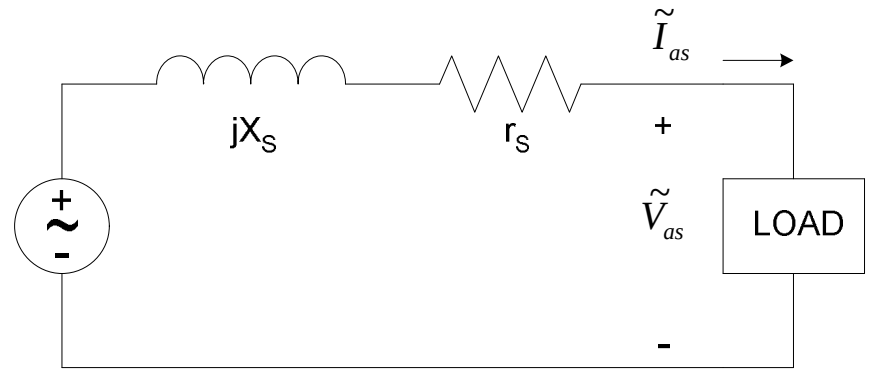

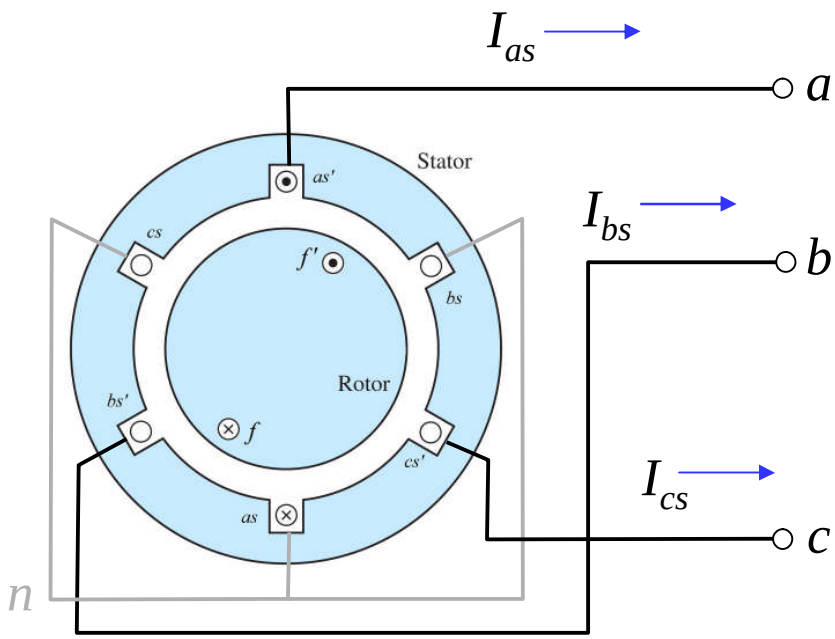

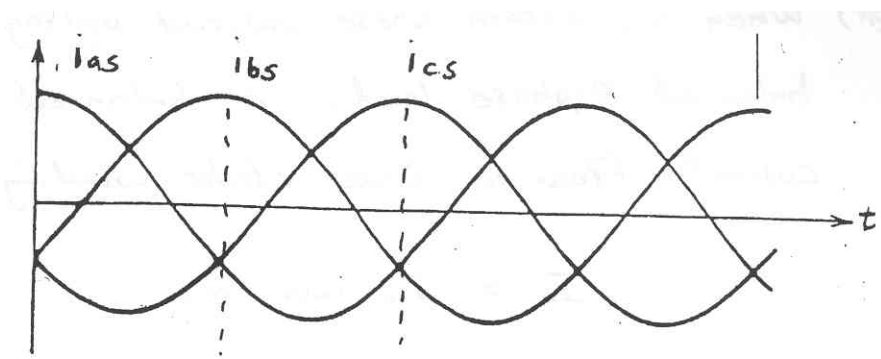

Motor speed (multiple poles)

- The relation between rotor angular velocity (ω_m) and that of the induced voltage (ω_e) is given by

$$\omega_e = \frac{P}{2}\omega_m$$

- Converting to electrical frequency (f_e) in hertz and motor speed in RPM, we have

$$2\pi f_e = \frac{P}{2}\left(N_m \frac{2\pi}{60}\right) \quad \Rightarrow \quad N_m = \frac{120 f_e}{P} \quad \text{[rpm]}$$

Per phase equivalent circuit

- The per phase equivalent can thus be drawn

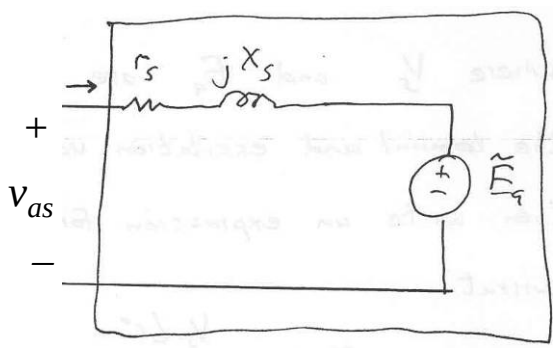

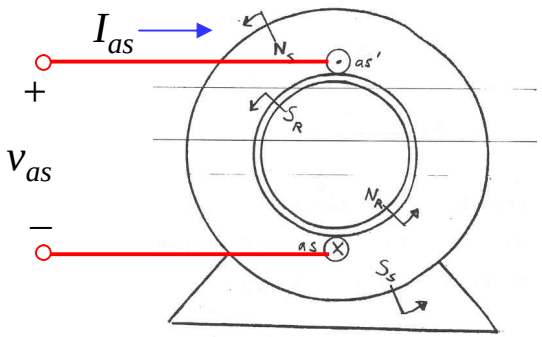

$$V_{as} = r_s I_{as} + \tilde{E}_a + jX_s \tilde{I}_{as}$$

terminal voltage (line-to-neutral) | stator winding resistance | excitation or generated voltage | synchronous reactance

- This circuit would constitute one phase of a three-phase source (either Y or Δ connected).

Per phase equivalent circuit

- This circuit would constitute one phase of a three-phase source (either Y or Δ connected).

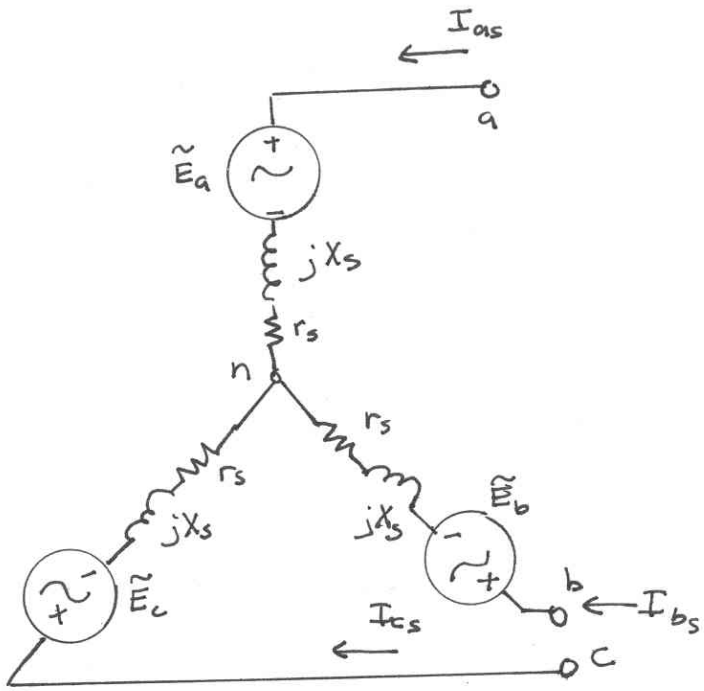

Y-connected source

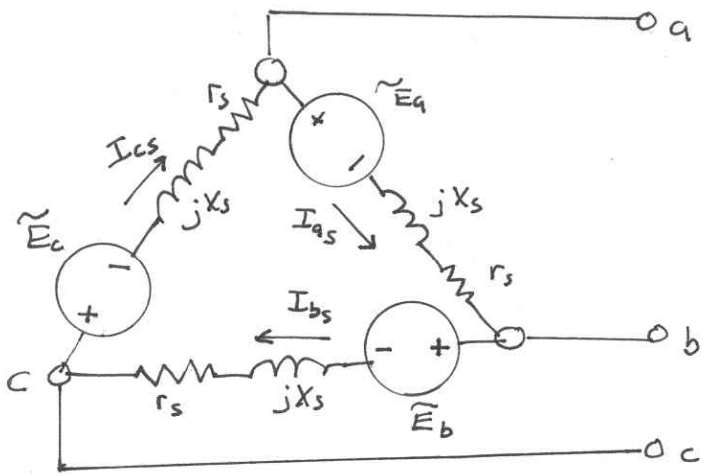

Δ-connected source

Example Problem 11

A 208-V_{rms} (line), 60 Hz, Y-connected generator has $X_s = 100\ \Omega$, $r_s = 0\ \Omega$. At rated terminal voltage, the machine delivers 1.5-A_{rms} (line) to a 0.707 pf lagging load.

a. Determine the machine current.

b. Determine the excitation (or generator) voltage E_a.

c. Determine the power (torque) angle δ.

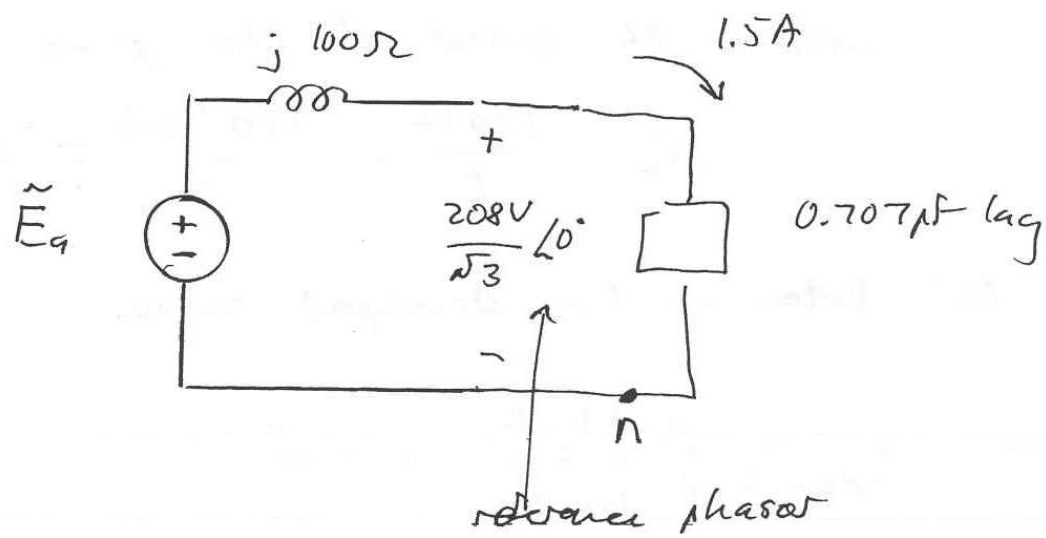

Example Problem 11 (continued)

d. If the generator has 4 poles, what is the speed of the prime mover.

e. Determine the developed torque.

f. Suppose the load current increases to $3\text{-}A_{rms}$ at a 0.707 lagging pf. If we have the same terminal voltages, how must the field current change?

Half-wave rectifier with filter

- We examined the filtered half-wave rectifier and determined

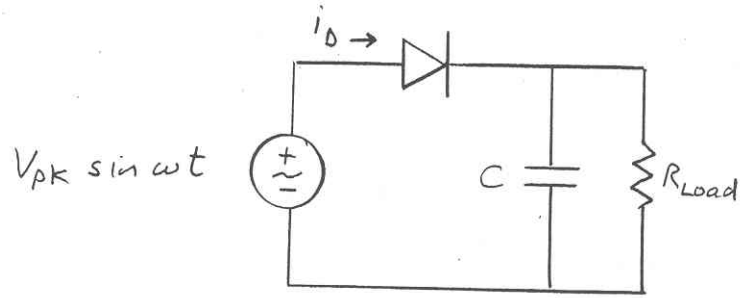

half-wave rectifier with capacitor filtering

$$\gamma = \pi - \tan^{-1}\left(\omega R_{\text{load}} C\right)$$

$$\sin\alpha - \sin(\gamma)e^{-\left(\frac{2\pi+\alpha-\gamma}{\omega R_{\text{load}} C}\right)} = 0$$

$$v_{\text{out,ave}} = v_{\text{pk}} - \frac{\Delta v_{\text{out}}}{2}$$

$$\Delta v_{\text{out}} = v_{\text{pk}} - v_{\text{pk}}\sin\alpha$$

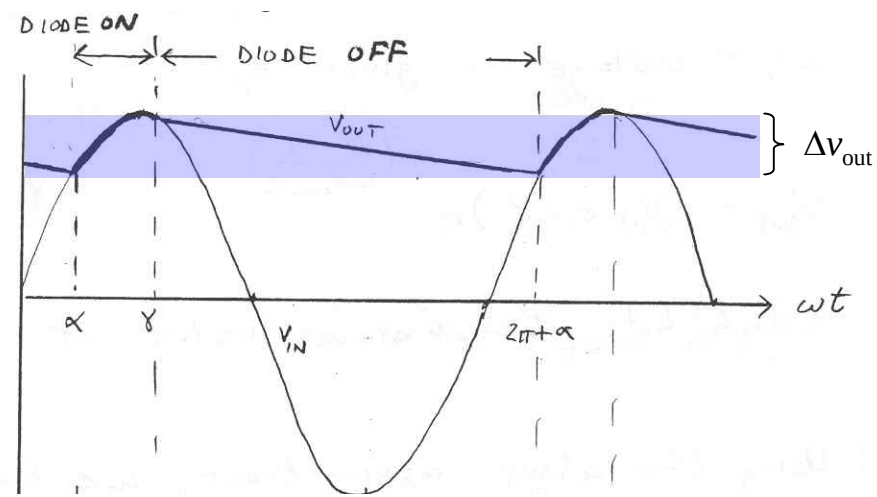

Simplifying filter design

- This simplified equation yields some insights in design.
  - The ripple is largest when R_{load} is smallest.
  - The average output voltage decreases with R_{load} small.
  - The magnitude of the ripple can be made small by making C big.

$$\Delta v_{\text{out}} = \frac{v_{\text{pk}}}{f R_{\text{load}} C}$$

$$v_{\text{out,ave}} \approx v_{\text{pk}} \left(1 - \frac{1}{2 f R_{\text{load}} C} \right)$$

Zener diode voltage regulator

- Recall our expression for the zener diode current.

$$i_z = i_s - i_L$$
$$= \frac{V_{\text{unreg}} - V_z}{R_s} - \frac{V_z}{R_{\text{load}}}$$

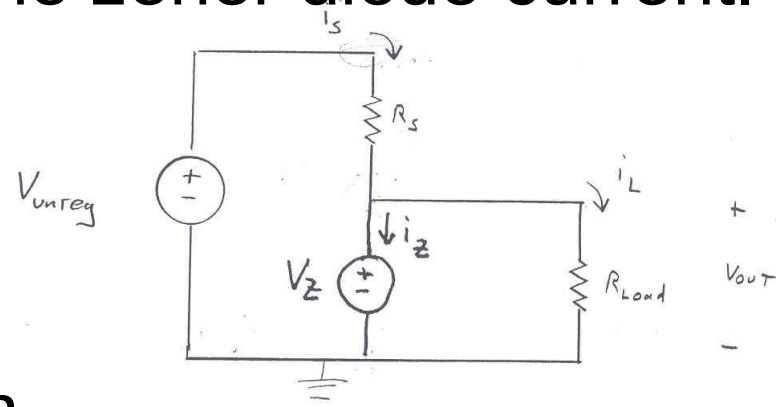

- Max/min currents are given

$$i_{z,\max} = \frac{V_{\text{unreg,max}} - V_z}{R_s} - \frac{V_z}{R_{\text{load,max}}}$$

$$i_{z,\min} = \frac{V_{\text{unreg,min}} - V_z}{R_s} - \frac{V_z}{R_{\text{load,min}}}$$

where $R_{\text{load,min}} < R_{\text{load}} < R_{\text{load,max}}$

Example Problem 12
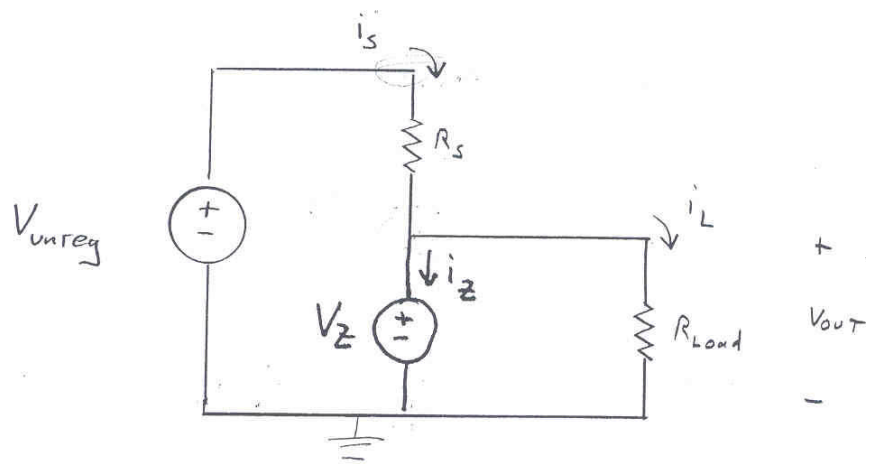
Suppose you choose a 0.5 W, 9 V zener diode for a load application where 300-Ω < R_{load} < ∞. Determine the range of V_{unreg} for R_s = 20-Ω, 100-Ω , and 500-Ω .