Lesson 6: Network Analysis 1: Node Voltage Method

Nodal analysis
Based on a systematic application of _____, nodal analysis allows us to obtain a set of _____ to solve for voltages and current in any _____ circuit.
Nodal analysis is a power tool.

Nodal analysis steps
In nodal analysis we are interested in finding node _____.
Given a circuit with *n* nodes,

1. Select a _____ node. Assign voltages v_1, v_2, …, v_{n-1} to the remaining ____ nodes.

2. Apply _____ to each *n*-1 node expressing _____ in terms of node voltages.

3. Solve the resulting simultaneous equations to obtain unknown node voltages.

Reference node
The reference node is the node from which all voltages are referenced and it is assumed to have _____ potential (0 V).
The reference is commonly called the _____.

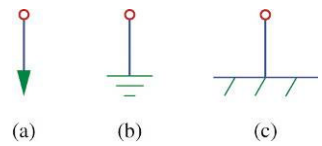

Labeling node voltages

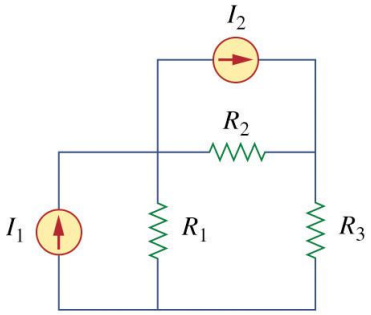

$i_1 =$

$i_2 =$

$i_3 =$

Expressing branch currents
In nodal analysis, we usually write the branch currents directly in terms of node voltages and branch resistances.

- We skip the step of writing i_1, i_2, i_3, …

Care must be taken in keeping the polarity correct!
Recall the passive sign convention:
Current flows from a _____ potential to a _____ potential in a resistor.

Where are the voltage sources?
Note that the previous examples included only current sources.
How do we write a KCL equation when one of the elements is a voltage source?

- There's no way of knowing the current through a voltage source in advance.

Handling voltage sources

Case 1: If the voltage source is connected to a _____ node, set the node voltage equal to the source. (v_3 = ____ V)

Case 2: If the voltage source is connected to two non-reference nodes, form a _____.

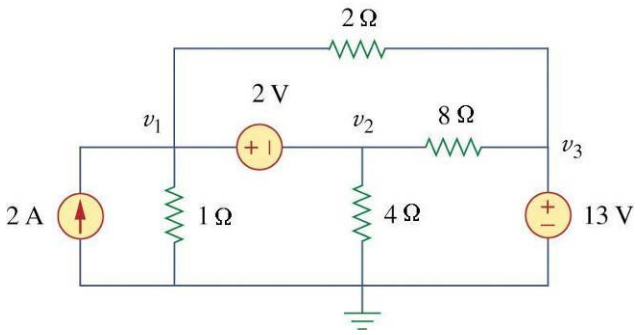

Supernode

A supernode is formed by enclosing a voltage source connected between two _____ nodes and any elements in parallel with it.

Apply both KCL and KVL at the node.

KCL

KVL

Supernode properties

1. The voltage source inside the supernode provides the constraint equation needed to solve for the node voltages.
2. The supernode has ____ voltage of its own.
3. A supernode requires the application of both KVL and KCL.

Example Problem 1

Calculate the node voltages in the circuit below.

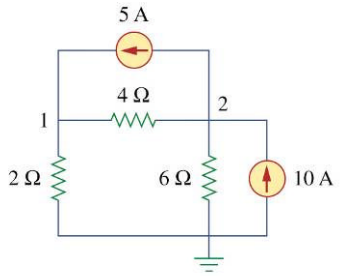

Example Problem 2

Calculate the node voltages in the circuit below.

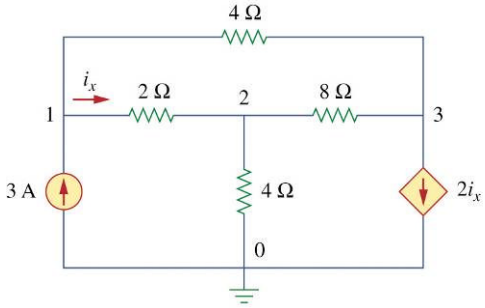

Example Problem 3

Determine the nodal equations required to solve for v_2 and v_3.

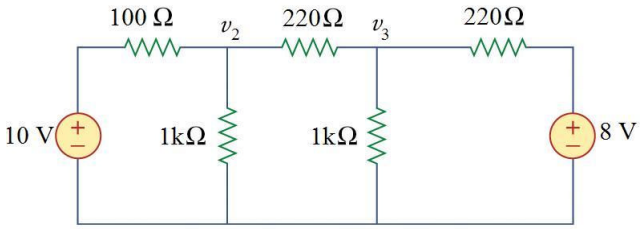

Example Problem 4
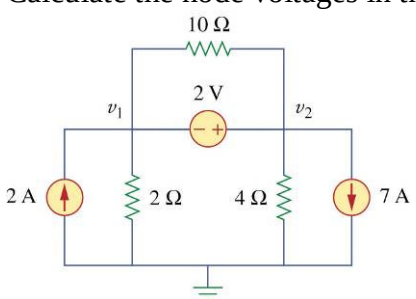
Calculate the node voltages in the circuit below.