Lesson 6:
Network Analysis 1:
Node Voltage Method

Circuit analysis toolbox

Ohm's law

Series resistance

Voltage divider rule

Nodal analysis

Meters

KVL

KCL

Parallel resistance

Current divider

Source transformation

Circuit analysis toolbox

Nodal analysis

- Based on a systematic application of KCL, nodal analysis allows us to obtain a set of simultaneous equations to solve for voltages and current in any linear circuit.
- Nodal analysis is a power tool.

Nodal analysis steps

- In nodal analysis we are interested in finding **node voltages**.

- Given a circuit with n nodes,
  1. Select a reference node. Assign voltages $v_1, v_2, \ldots, v_{n-1}$ to the remaining n-1 nodes.
  2. Apply KCL to each n-1 node expressing branch currents in terms of node voltages.
  3. Solve the resulting simultaneous equations to obtain unknown node voltages.

Reference node

- The reference node is the node from which all voltages are referenced and it is assumed to have zero potential (0 V).
- The reference is commonly called the **ground**.

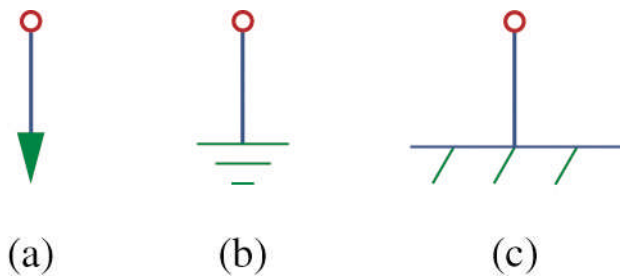

common ground | ground | chassis ground

Labeling node voltages

- How many nodes does the circuit below have?
- Label the nodes.

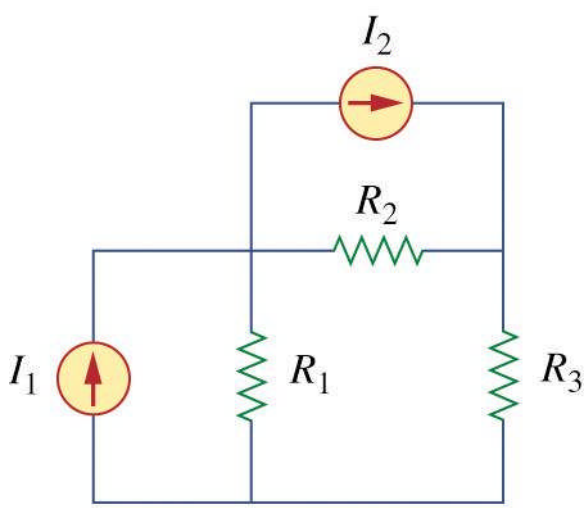

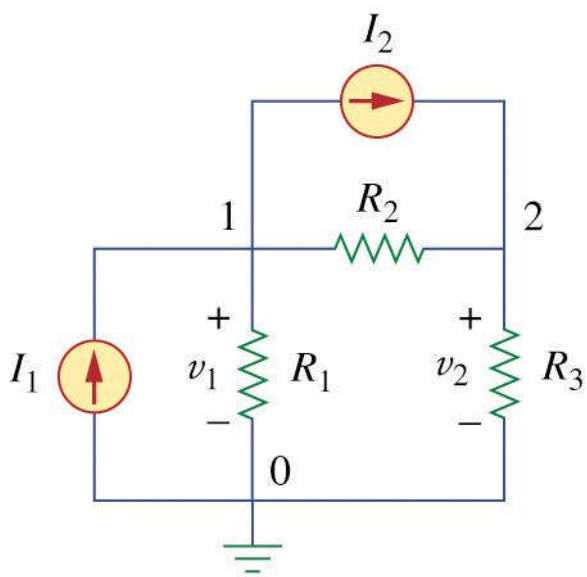

Expressing branch currents

- In nodal analysis, we usually write the branch currents directly in terms of node voltages and branch resistances.
  - We skip the step of writing i_1, i_2, i_3, …
- Care must be taken in keeping the polarity correct!

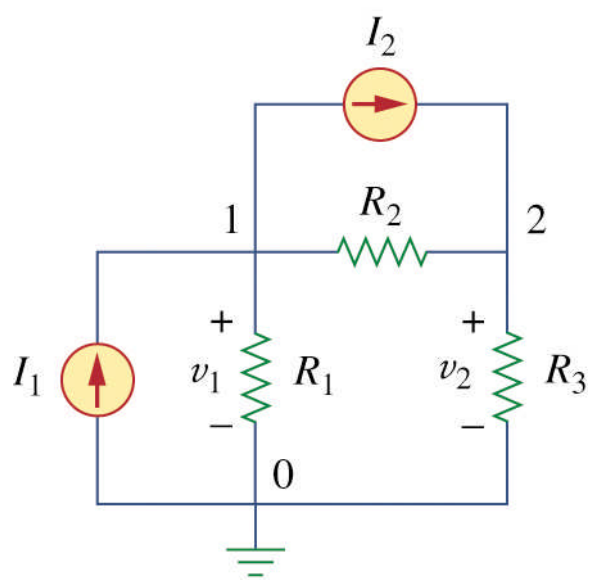

Expressing branch currents

- Recall the passive sign convention:

Current flows from a higher potential to a lower potential in a resistor.

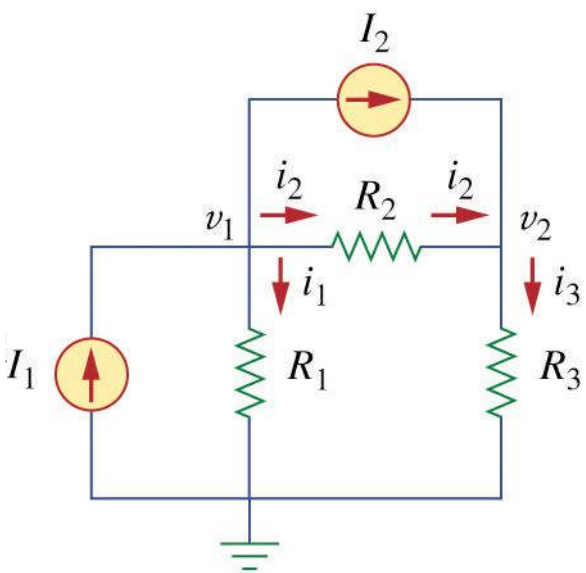

$$i_1 = \frac{v_1 - 0}{R_1}$$

$$i_2 = \frac{v_1 - v_2}{R_2}$$

$$i_3 = \frac{v_2 - 0}{R_3}$$

Apply KCL

current in = current out

$$I_1 = I_2 + \frac{v_1}{R_1} + \frac{v_1 - v_2}{R_2}$$

$$I_2 + \frac{v_1 - v_2}{R_2} = \frac{v_2}{R_3}$$

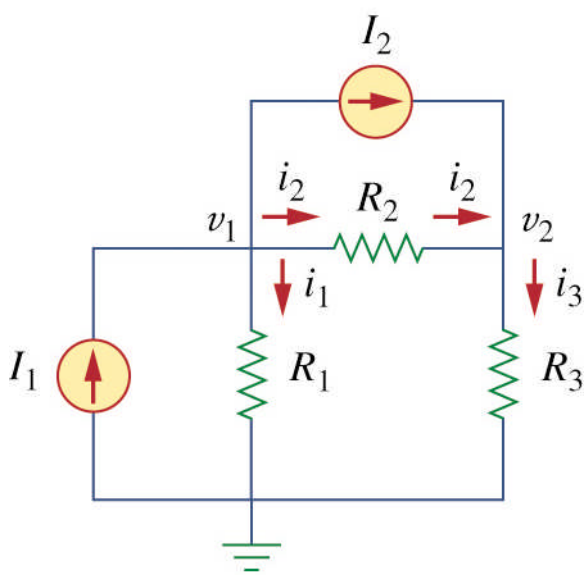

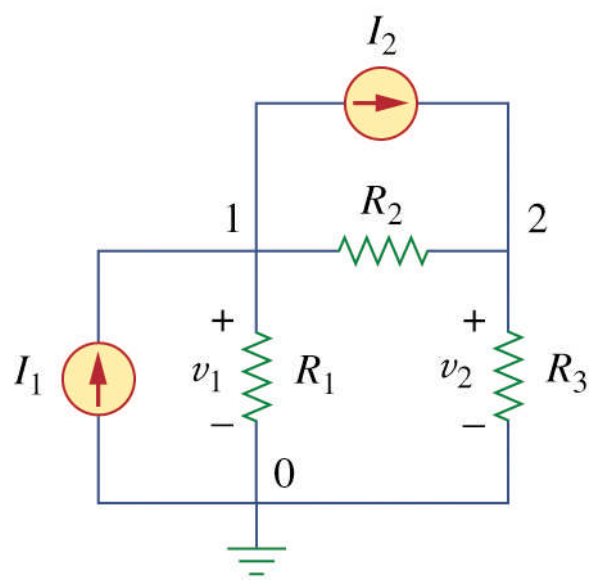

Example Problem 1

Calculate the node voltages in the circuit below.

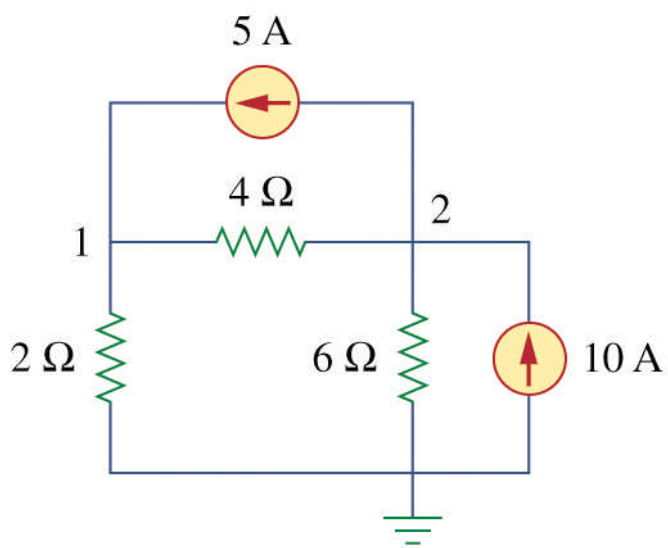

Example Problem 2

Calculate the node voltages in the circuit below.

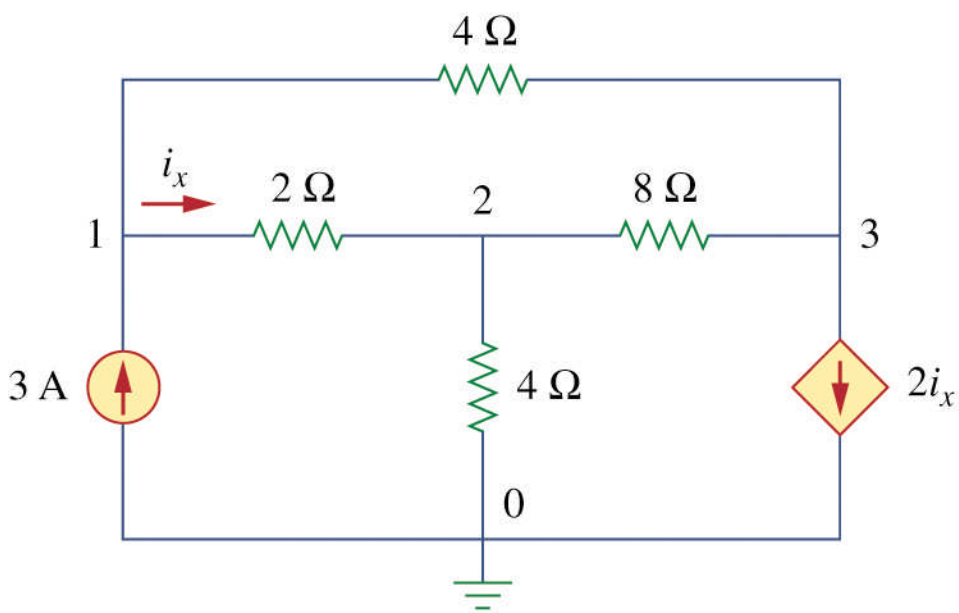

Example Problem 2

Calculate the node voltages in the circuit below.

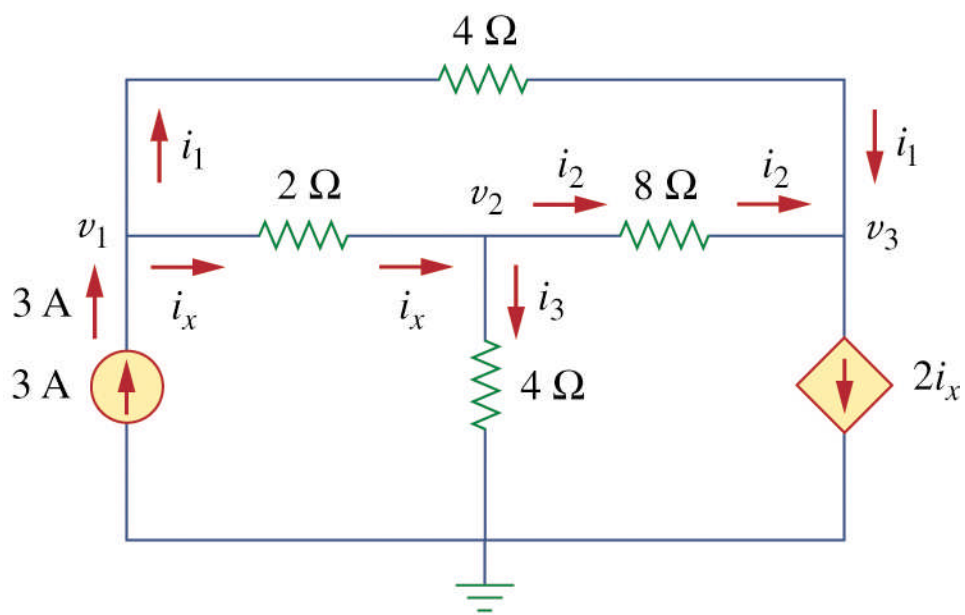

Where are the voltage sources?

- Note that the previous examples included only current sources.
- How do we write a KCL equation when one of the elements is a voltage source?
  - There's no way of knowing the current through a voltage source in advance.

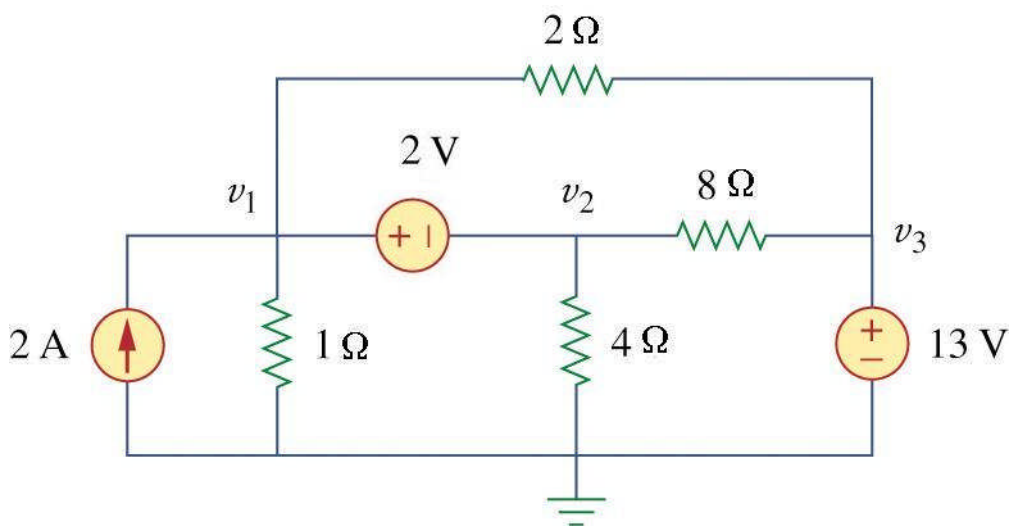

Handling voltage sources

Case 1: If the voltage source is connected to a reference node, set the node voltage equal to the source. ($v_3 = 13$ V)

Case 2: If the voltage source is connected to two non-reference nodes, form a **supernode.**

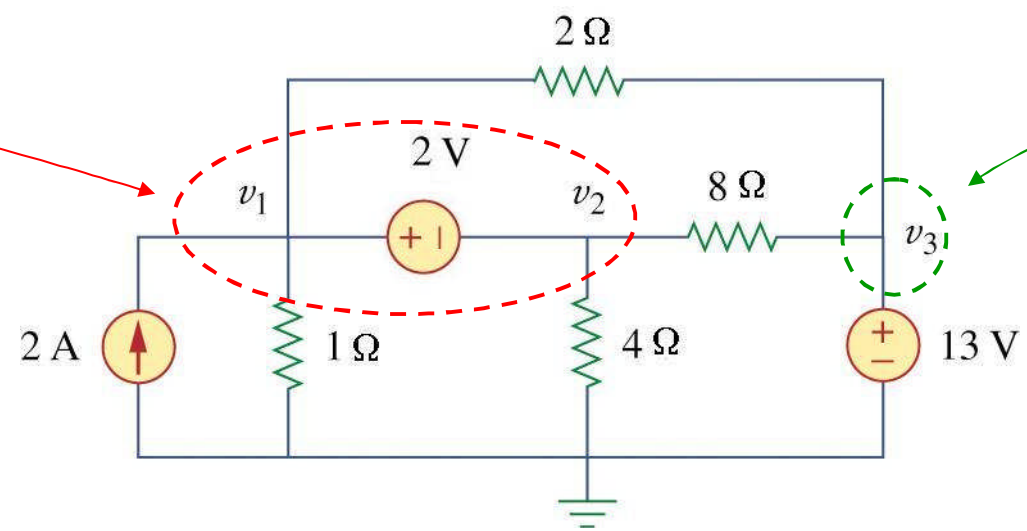

Supernode

- A **supernode** is formed by enclosing a voltage source connected between two non-reference nodes and any elements in parallel with it.
- Apply both KCL and KVL at the node.

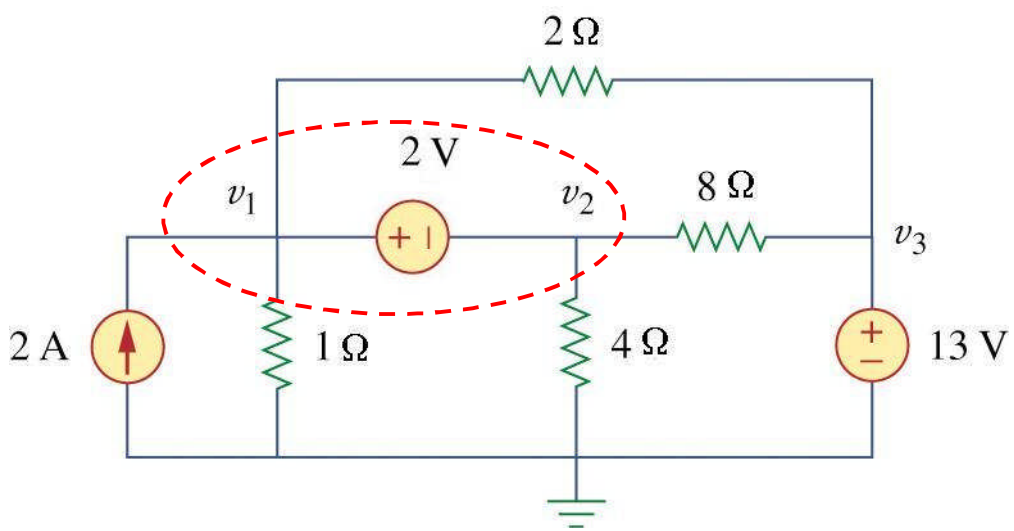

Supernode

- KCL

$$2 = \frac{v_1 - v_3}{2} + \frac{v_1}{1} + \frac{v_2}{4} + \frac{v_2 - v_3}{8}$$

- KVL

$$-v_1 + 2 + v_2 = 0$$

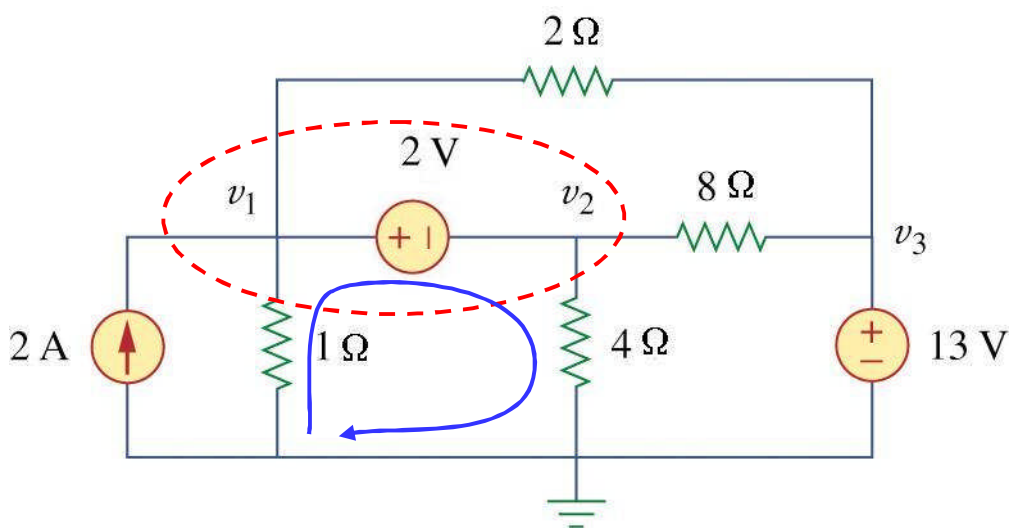

Supernode properties

1. The voltage source inside the supernode provides the constraint equation needed to solve for the node voltages.
2. The supernode has no voltage of its own.
3. A supernode requires the application of both KVL and KCL.

Example Problem 3

Determine the nodal equations required to solve for v_2 and v_3.

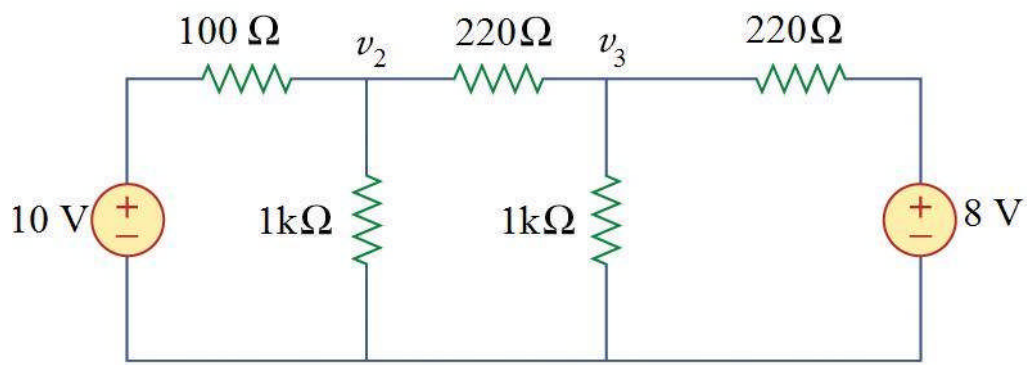

Example Problem 4
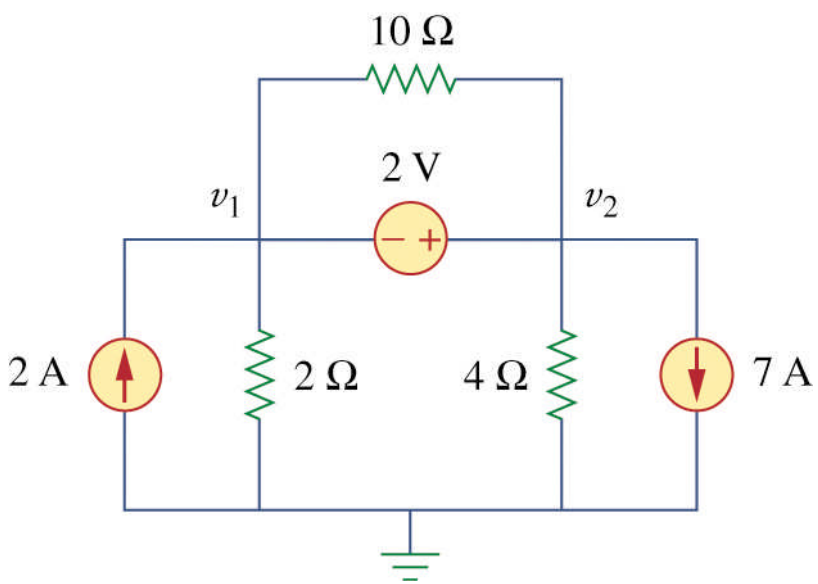
Calculate the node voltages in the circuit below.