29. Each resistor below is 1Ω. Find R_{eq}

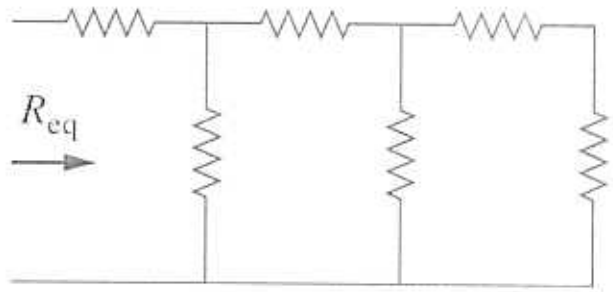

Solve by combining resistances in series and parallel

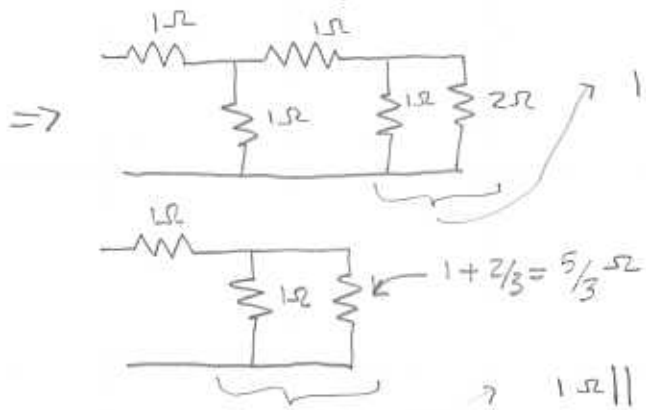

$1 \| 2 = \frac{1 \cdot 2}{1+2} = \frac{2}{3}\ \Omega$

$1\Omega \| 5/3\ \Omega = \frac{5/3 \cdot 1}{1 + 5/3} = \frac{5/3}{8/3} = 5/8\ \Omega$

$R_{eq} = 1 + 5/8 = \boxed{1\,5/8\ \Omega \text{ or } 1.625\ \Omega}$

30. Find R_{eq}

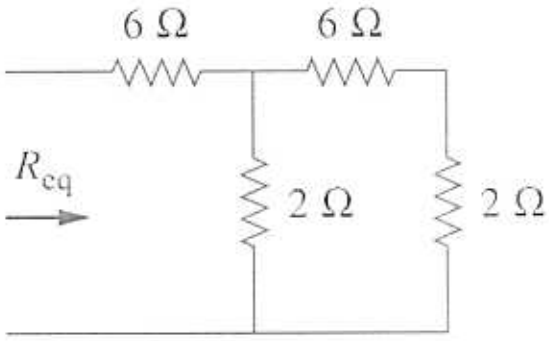

$R_{eq} = 6 + 2 \| (6+2)$

$= 6 + 2 \| 8$

$= 6 + \frac{2 \cdot 8}{2+8}$

$= \boxed{7.6\ \Omega}$

34.

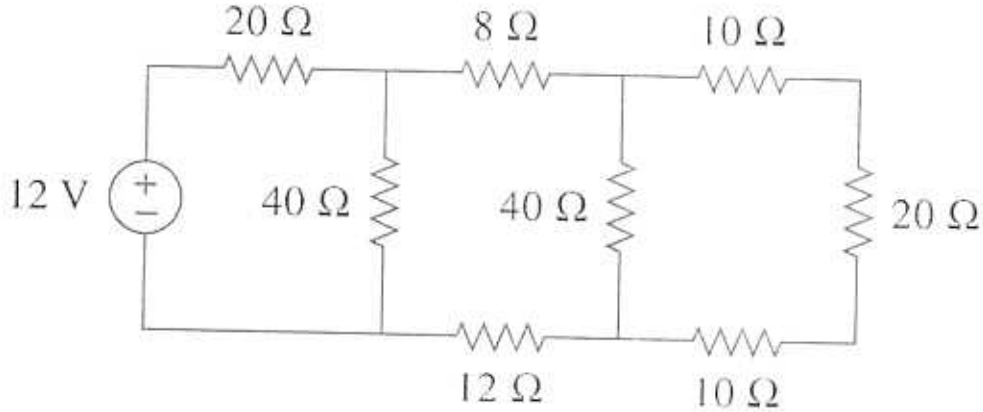

Find R_{eq} (as seen by 12V source) and total power dissipated.

Simplify from right to left

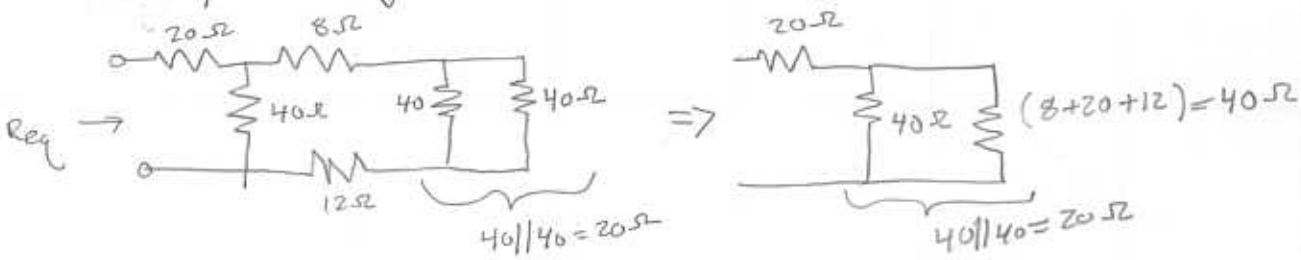

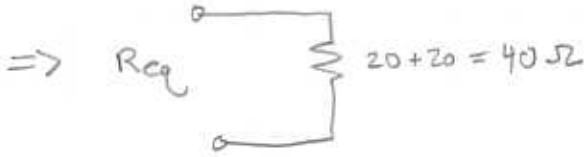

$$\boxed{R_{eq} = 40\Omega}$$

Total power dissipated

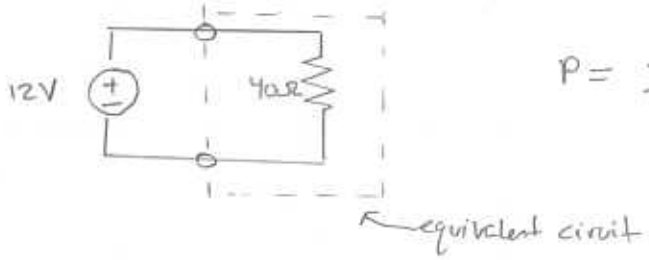

$$P = \frac{V^2}{R} = \frac{12^2}{40} = \frac{144}{40} = \frac{36}{10} = \boxed{3.6\ W}$$

P2.38

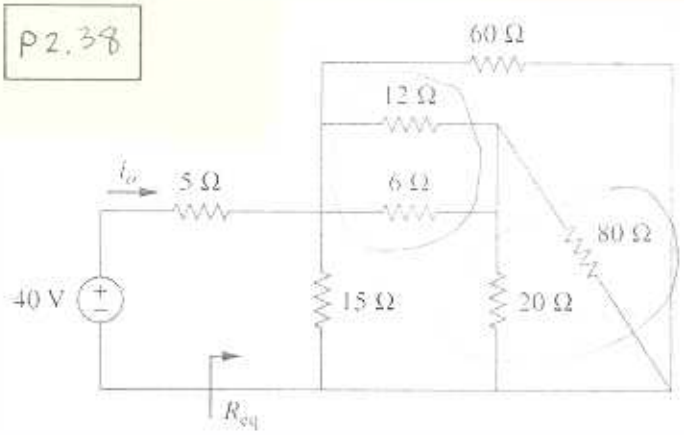

Find R_{eq} and i_o.

Combine $6 \| 12 = \frac{72}{18} = 4\ \Omega$

$20 \| 80 = \frac{1600}{100} = 16\ \Omega$

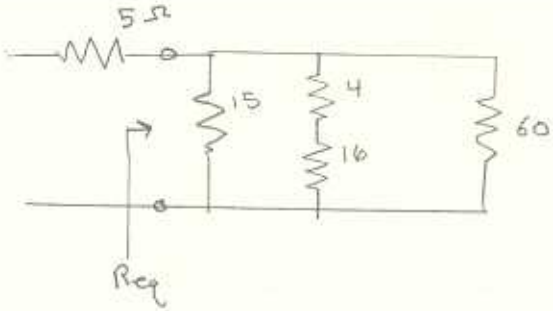

$15 \| (4+16) = \frac{300}{15+20} = \frac{300}{35} = \frac{60}{7}\ \Omega$

$60/7 \| 60 = 7.5\ \Omega$

$\boxed{R_{eq} = 12.5\ \Omega}$

$i_o = \frac{40}{5+7.5} = \frac{40}{} \cdot \frac{2}{25} = \frac{8 \cdot 2}{5} = \frac{16}{5}$

$i_o = \boxed{3.2\ A}$

P2.42

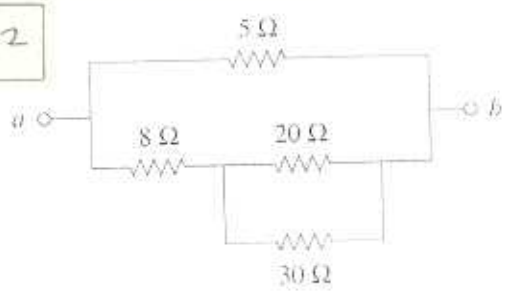

(a)

$20 \| 30 = 12\ \Omega$

$5 \| (8+12) = \boxed{4\ \Omega}$

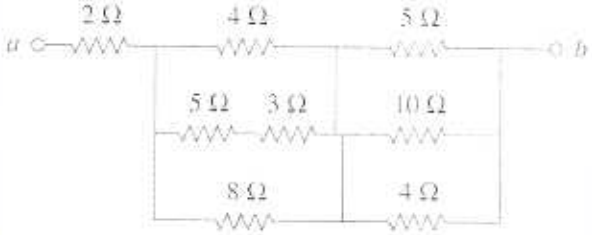

(b)

$5 \| 10 = 10/3\ \Omega$

$4 \| 10/3 = \frac{40/3}{12/3 + 10/3} = \frac{40}{22} = \frac{20}{11}\ \Omega$

$8 \| (5+3) = 8 \| 8 = 4\ \Omega$

$4 \| 4 = 2$

$R_{eq} = 2 + 2 + \frac{20}{11} = \boxed{\frac{64}{11}\ \Omega \approx 5.82\ \Omega}$

P. 2.47

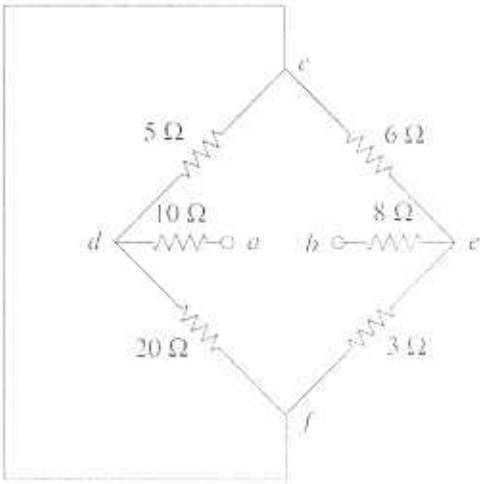

Redraw circuit

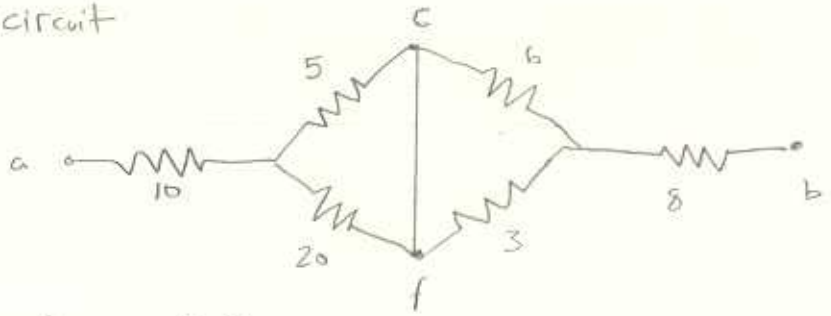

note $5 \| 20 = 4\,\Omega$

$6 \| 3 = 2\,\Omega$

$R_{ab} = 10 + 4 + 2 + 8 = \boxed{24\,\Omega}$