UPDOWN CATEGORIES

Michael E. Hoffman, U. S. Naval Academy

Axioms

$\mathcal{C}$ is a small category, together with a rank functor $|\cdot| : \mathcal{C} \to \mathbb{N}$ so that

1. Each level $\mathcal{C}_n = \{c \in \operatorname{Ob}\mathcal{C} : |c| = n\}$ is finite.
2. $\mathcal{C}_0$ consists of the single element $\hat{0}$, and $\operatorname{Hom}(\hat{0}, c)$ is nonempty for all $c \in \operatorname{Ob}\mathcal{C}$.
3. The set $\operatorname{Hom}(p, p')$ is always finite, and is empty unless $|p| < |p'|$ or $p = p'$; in the latter case, $\operatorname{Hom}(p, p')$ is a group $\operatorname{Aut}(p)$.
4. Any morphism $p \to p'$, $|p'| = |p| + k$, is a composition $p = p_0 \to p_1 \to \cdots \to p_k = p'$ of morphisms between adjacent levels.
5. If $|p'| = |p| + 1$, the actions of $\operatorname{Aut}(p)$ and $\operatorname{Aut}(p')$ on $\operatorname{Hom}(p, p')$ are free.

1

Multiplicities

For an updown category $\mathcal{C}$ and objects c, c' of $\mathcal{C}$ with $|c'| = |c| + 1$, we define

$$u(c; c') = |\operatorname{Hom}(c, c')/\operatorname{Aut}(c')| = \frac{|\operatorname{Hom}(c, c')|}{|\operatorname{Aut}(c')|}$$

and

$$d(c; c') = |\operatorname{Hom}(c, c')/\operatorname{Aut}(c)| = \frac{|\operatorname{Hom}(c, c')|}{|\operatorname{Aut}(c)|}.$$

Then it follows immediately that

$$u(c; c')|\operatorname{Aut}(c')| = d(c; c')|\operatorname{Aut}(c)|. \qquad (1)$$

If all the automorphism groups are trivial, then

$$u(c; c') = d(c; c') = |\operatorname{Hom}(c, c')|$$

and we call $\mathcal{C}$ unilateral.

2

Up and Down Operators

Let $\mathbb{k}$ be a field of characteristic 0, $\mathbb{k}(\operatorname{Ob}\mathcal{C})$ the graded vector space with elements of $\operatorname{Ob}\mathcal{C}$ as basis. Define operators U and D on $\mathbb{k}(\operatorname{Ob}\mathcal{C})$ as follows:

$$Uc = \sum_{|c'|=|c|+1} u(c; c')c'$$

for $c \in \operatorname{Ob}\mathcal{C}$, and

$$Dc = \sum_{|c'|=|c|-1} d(c'; c)c'$$

for $c \in \operatorname{Ob}\mathcal{C}$, $c \neq \hat{0}$; we set $D\hat{0} = 0$.

Now define an inner product $\langle , \rangle$ on $\mathbb{k}(\operatorname{Ob}\mathcal{C})$ by setting

$$\langle c, c' \rangle = \begin{cases} |\operatorname{Aut}(c)|, & \text{if } c' = c, \\ 0, & \text{otherwise.} \end{cases}$$

Then it is easy to show (using equation (1)) that the operators U and D are adjoint with respect to $\langle , \rangle$.

3

Extending the Multiplicities

We can now extend the multiplicities u and d to all pairs of elements $c, c' \in \operatorname{Ob}\mathcal{C}$: suppose $|c'| = |c| + k$. If $k < 0$ we put $u(c; c') = d(c; c') = 0$, while for $k \geq 0$

$$u(c; c') = \frac{\langle U^k(c), c' \rangle}{|\operatorname{Aut}(c')|} = \frac{\langle c, D^k(c') \rangle}{|\operatorname{Aut}(c')|}$$

and

$$d(c; c') = \frac{\langle U^k(c), c' \rangle}{|\operatorname{Aut}(c)|} = \frac{\langle c, D^k(c') \rangle}{|\operatorname{Aut}(c)|}.$$

With this definition, it is immediate that equation (1) extends to arbitrary pairs of objects. In particular,

$$\frac{d(\hat{0}; c)}{u(\hat{0}; c)} = \frac{|\operatorname{Aut}(c)|}{|\operatorname{Aut}\hat{0}|} \qquad (2)$$

for any $c \in \operatorname{Ob}\mathcal{C}$. It is also easy to prove that

$$u(c; c') = \sum_{|c''|=k} u(c; c'')u(c''; c')$$

for any $|c| \leq k \leq |c'|$, and similarly for d.

4

Generating Functions

The object generating function of $\mathcal{C}$ is

$$O_{\mathcal{C}}(t) = \sum_{c \in \operatorname{Ob}\mathcal{C}} \frac{t^{|c|}}{|\operatorname{Aut}(c)|},$$

and the morphism generating function of $\mathcal{C}$ is

$$M_{\mathcal{C}}(t) = \sum_{c, c' \in \operatorname{Ob}\mathcal{C}, |c'|=|c|+1} \frac{u(c; c')t^{|c|+|c'|}}{|\operatorname{Aut}(c)|}.$$

If we define the formal series of $\mathcal{C}$ by

$$S_{\mathcal{C}}(t) = \sum_{c \in \operatorname{Ob}\mathcal{C}} \frac{ct^{|c|}}{|\operatorname{Aut}(c)|} \in \mathbb{k}(\operatorname{Ob}\mathcal{C})[[t]],$$

then it is easy to show that

$$\langle S_{\mathcal{C}}(t), S_{\mathcal{C}}(t) \rangle = O_{\mathcal{C}}(t^2)$$

and

$$\langle US_{\mathcal{C}}(t), S_{\mathcal{C}}(t) \rangle = M_{\mathcal{C}}(t).$$

5

$\mathcal{G}$: Graphs on n Vertices

Let $\mathcal{G}$ be the category of isomorphism classes of graphs on n vertices. A morphism from $[G_1]$ to $[G_2]$, where G_1, G_2 are subgraphs of K_n, is a simplicial map $G_1 \to G_2$ bijective on vertices. Rank is given by number of edges, so $\mathcal{G}_k$ is empty unless $0 \leq k \leq \binom{n}{2}$. The minimal element $\hat{0}$ is the graph with n vertices and no edges, and the maximal element is K_n (both $\operatorname{Aut}\hat{0}$ and $\operatorname{Aut}K_n$ are the symmetric group of degree n).

The generating functions are

$$O_{\mathcal{G}}(t) = \frac{1}{n!}(1+t)^{\binom{n}{2}},$$

and

$$M_{\mathcal{G}}(t) = \frac{t}{n!}\binom{n}{2}(1+t^2)^{\binom{n}{2}-1}.$$

Also,

$$u(\hat{0}; K_n) = d(\hat{0}; K_n) = \binom{n}{2}!.$$

6

GRAPHS ON 4 VERTICES

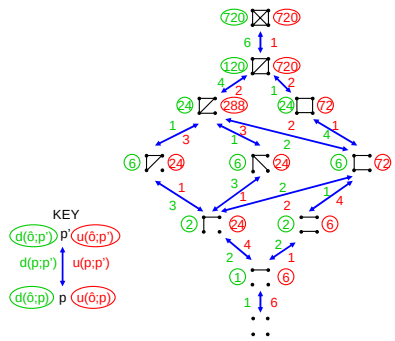

$\mathcal{M}$: Monomials in n Variables

$\mathcal{M}_k$ is the set of monomials of degree k in the n variables $t_1, \ldots, t_n$. A morphism from $u \in \mathcal{M}_k$ to $v \in \mathcal{M}_p$, $p \geq k$, is an inclusion of u in v as a subfactor. The empty monomial 1 plays the role of $\hat{0}$. By equation (2),

$$\frac{d(1; t_1^{m_1} \cdots t_n^{m_n})}{u(1; t_1^{m_1} \cdots t_n^{m_n})} = |\operatorname{Aut}(t_1^{m_1} \cdots t_n^{m_n})| = m_1! \cdots m_n!$$

In fact,

$$d(1; t_1^{m_1} \cdots t_n^{m_n}) = (m_1 + \cdots + m_n)!$$

and

$$u(1; t_1^{m_1} \cdots t_n^{m_n}) = \frac{(m_1 + \cdots + m_n)!}{m_1! \cdots m_n!}.$$

The generating functions are

$$O_{\mathcal{M}}(t) = e^{nt}, \quad M_{\mathcal{M}}(t) = nte^{nt^2}.$$

7

MONOMIALS IN x,y

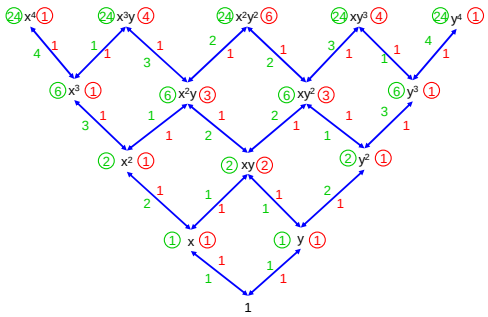

$\mathcal{X}$: Partitions

$\mathcal{X}$ is the category whose objects are integer partitions, i.e., finite nonincreasing sequences of positive integers, with rank

$$|(\lambda_1, \ldots, \lambda_n)| = \lambda_1 + \cdots + \lambda_n.$$

A morphism from $(\lambda_1, \ldots, \lambda_n)$ to $(\mu_1, \ldots, \mu_m)$ is an injective function $f : [n] \to [m]$ such that $\lambda_i \leq \mu_j$ whenever $f(i) = j$. Evidently $\operatorname{Aut}(\lambda)$ exchanges parts of λ having the same size, so

$$|\operatorname{Aut}(\lambda)| = m_1(\lambda)!m_2(\lambda)! \cdots$$

where $m_i(\lambda)$ is the number of parts of λ having size i. The object generating function is

$$O_{\mathcal{X}}(t) = \exp\left(\frac{t}{1-t}\right),$$

and the morphism generating function is

$$M_{\mathcal{X}}(t) = \frac{t}{1-t^2}\exp\left(\frac{t^2}{1-t^2}\right).$$

8

$\mathcal{T}$: Rooted Trees

$\mathcal{T}_n$ is the set of rooted trees having n non-root vertices. A morphism $p \to p'$ is an injective simplicial map sending the root of p to the root of p'. The one-vertex tree plays the role of $\hat{0}$. The object generating function is

$$O_{\mathcal{T}}(t) = \sum_{n \geq 0} \frac{(n+1)^n}{(n+1)!}t^n.$$

This function is already well-known in the combinatorial theory of rooted trees: $tO_{\mathcal{T}}(t)$ is the functional inverse of te^{-t}. Because

$$\sum_{|p'|=n+1} u(p; p') = n + 1$$

for all $p \in \mathcal{T}_n$, it then follows that

$$M_{\mathcal{T}}(t) = \sum_{n \geq 0} \frac{(n+1)^n}{n!}t^{2n+1}.$$

9

ROOTED TREES

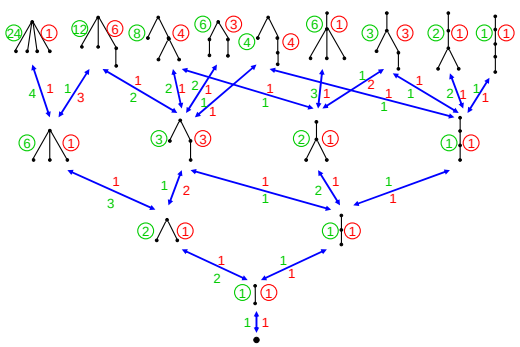

PARTITIONS

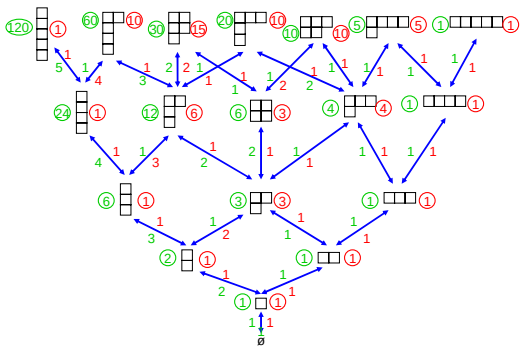

www.usna.edu/Users/math/meh/