Linear ODEs, I

Prof. Joyner, 8-17-2007[1]

We want to describe the form a solution to a linear ODE can take. Before doing this, we introduce two pieces of terminology.

- Suppose $f_1(t)$, $f_2(t)$, $\ldots$, $f_n(t)$ are given functions. A **linear combination** of these functions is another fucntion of the form

$$c_1 f_1(t) + c_2 f_2(t) + \ldots, + c_n f_n(t),$$

  for some constants c_1, ..., c_n. For example, $3\cos(t) - 2\sin(t)$ is a linear combination of $\cos(t)$, $\sin(t)$.

- A linear ODE of the form

$$y^{(n)} + b_1(t) y^{(n-1)} + ... + b_{n-1}(t) y' + b_n(t) y = f(t), \tag{1}$$

  is called **homogeneous** if $f(t) = 0$ (i.e., f is the 0 function) and otherwise it is called **non-homogeneous**.

The following result describes the general solution to a linear ODE.

Theorem 1 *Consider a linear ODE having of the form (1), for some given continuous functions $b_1(t)$, $\ldots$, $b_n(t)$, and $f(t)$. Then the following hold.*

- *There are n functions $y_1(t)$, $\ldots$, $y_n(t)$ (called* **fundamental solutions***), each satisfying the homogeneous ODE*

$$y^{(n)} + b_1(t) y^{(n-1)} + ... + b_{n-1}(t) y' + b_n(t) y = 0, \qquad 1 \leq i \leq n, \tag{2}$$

  such that every solution to (2) is a linear combination of these functions $y_1, \ldots, y_n$.

[1]These notes (including the figures, which were drawn mostly with dia and GIMP) are licensed under Attribution-ShareAlike Creative Commons license, `http://creativecommons.org/about/licenses/meet-the-licenses`.

- *Suppose you know a solution $y_p(t)$ (a* **particular solution***) to (1). Then every solution $y = y(t)$ (the* **general solution***) to the DE (1) has the form*

$$y(t) = y_h(t) + y_p(t), \tag{3}$$

where y_h (the "homogeneous part" of the general solution) is a linear combination

$$y_h(t) = c_1 y_1(t) + y_2(t) + ... + c_n y_n(t),$$

for some constants c_i, $1 \leq i \leq n$.

- *Conversely, every function of the form (3), for any constants c_i for $1 \leq i \leq n$, is a solution to (1).*

Example 2 *Recall the example in the introduction where we looked for functions solving $x' + x = 1$ by "guessing". The function $x_p(t) = 1$ is a particular solution to $x' + x = 1$. The function $x_1(t) = e^{-t}$ is a fundamental solution to $x' + x = 0$. The general solution is therefore $x(t) = 1 + c_1 e^{-t}$, for a constant c_1.*

Example 3 *The charge on the capacitor of an RLC electrical circuit is modeled by a 2-nd order linear DE [C].*

Series RLC Circuit notations:

- *$E = E(t)$ - the voltage of the power source (a battery or other "electromotive force", measured in volts, V)*
- *$q = q(t)$ - the current in the circuit (measured in coulombs, C)*
- *$i = i(t)$ - the current in the circuit (measured in amperes, A)*
- *L - the inductance of the inductor (measured in henrys, H)*
- *R - the resistance of the resistor (measured in ohms, Ω);*
- *C - the capacitance of the capacitor (measured in farads, F)*

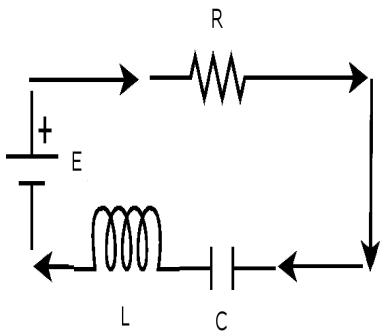

Figure 1: RLC circuit.

The charge q on the capacitor satisfies the linear IPV:

$$Lq'' + Rq' + \frac{1}{C}q = E(t), \quad q(0) = q_0, \quad q'(0) = i_0.$$

Example 4 *Recall the example in the introduction where we looked for functions solving $x' + x = 1$ by "guessing". The function $x_p(t) = 1$ is a particular solution to $x' + x = 1$. The function $x_1(t) = e^{-t}$ is a fundamental solution to $x' + x = 0$. The general solution is therefore $x(t) = 1 + c_1 e^{-t}$, for a constant c_1.*

Example 5 *The displacement from equilibrium of a mass attached to a spring is modeled by a 2-nd order linear DE [O].*

SSpring-mass notations:

- *$f(t)$ - the external force acting on the spring (if any)*
- *$x = x(t)$ - the displacement from equilibrium of a mass attached to a spring*
- *m - the mass*
- *b - the damping constant (if, say, the spring is immersed in a fluid)*
- *k - the spring constant.*

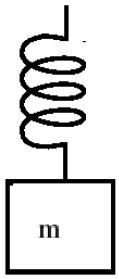

Figure 2: spring-mass model.

The displacement x satisfies the linear IPV:

$$mx'' + bx' + kx = f(t), \quad x(0) = x_0, \quad x'(0) = v_0.$$

Notice that each general solution to an n-th order ODE has n "degrees of freedom" (the arbitrary constants c_i). According to this theorem, to find the general solution of a linear ODE, we need only find a particular solution y_p and n fundamental solutions $y_1(t), \ldots, y_n(t)$.

Example 6 *Let us try to solve*

$$x' + x = 1, \quad x(0) = c,$$

where $c = 1$, $c = 2$, and $c = 3$. (Three different IVP's, three different solutions, find each one.)

The first problem, $x' + x = 1$ and $x(0) = 1$, is easy. The solutions to the DE $x' + x = 1$ which we "guessed at" in the previous example, $x(t) = 1$, satisfies this.

The second problem, $x' + x = 1$ and $x(0) = 2$, is not so simple. To solve this (and the third problem), we really need to know what the form is of the "general solution".

According to the theorem above, the general solution x has the form $x = x_p + x_h$. In this case, $x_p(t) = 1$ and $x_h(t) = c_1 x_1(t) = c_1 e^{-t}$, by an earlier

example. Therefore, every solution to the DE above is of the form $x(t) = 1 + c_1 e^{-t}$*, for some constant* c_1*. We use the initial condition to solve for* c_1*:*

- $x(0) = 1$*:* $1 = x(0) = 1 + c_1 e^0 = 1 + c_1$ *so* $c_1 = 0$ *and* $x(t) = 1$*.*
- $x(0) = 2$*:* $2 = x(0) = 1 + c_1 e^0 = 1 + c_1$ *so* $c_1 = 1$ *and* $x(t) = 1 + e^{-t}$*.*
- $x(0) = 3$*:* $3 = x(0) = 1 + c_1 e^0 = 1 + c_1$ *so* $c_1 = 2$ *and* $x(t) = 1 + 2e^{-t}$*.*

Here is one way to use SAGE *to solve for* c_1*. (Of course, you can do this yourself, but this shows you the* SAGE *syntax for solving equations. Type* `solve?` *in* SAGE *to get more details.) We use* SAGE *to solve the last IVP discussed above and then to plot the solution.*

SAGE

```
sage: t = var('t')
sage: c1 = var('c1')
sage: solnx = lambda t: 1+c1*exp(-t)
sage: solnx(0)
c1 + 1
sage: solve([solnx(0) == 3],c1)
[c1 == 2]
sage: c_1 = solve([solnx(0) == 3],c1)[0].rhs()
sage: c_1
2
sage: solnx1 = lambda t: 1+c*exp(-t)
sage: plot(solnx1(t),0,2)
Graphics object consisting of 1 graphics primitive
sage: P = plot(solnx1(t),0,2)
sage: show(P)
sage: P = plot(solnx1(t),0,5)
sage: show(P)
```

This plot is shown below.

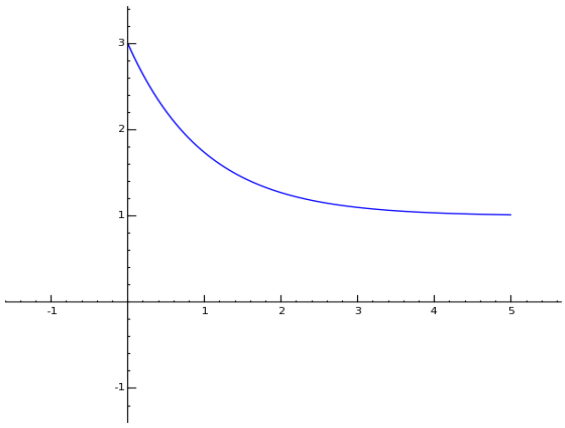

Figure 3: Solution to IVP $x' + x = 1$, $x(0) = 3$.

Exercise: *Use* SAGE *to solve and plot the solution to* $x' + x = 1$ *and* $x(0) = 2$.

References

[BD] W. Boyce and R. DiPrima, **Elementary Differential Equations and Boundary Value Problems**, 8th edition, John Wiley and Sons, 2005.

[C] General wikipedia introduction to RLC circuits:
`http://en.wikipedia.org/wiki/RLC_circuit`

[O] General wikipedia introduction to the Harmonic oscillator
`http://en.wikipedia.org/wiki/Harmonic_oscillator`