Electrical networks using Laplace transforms

Prof. D. Joyner and Prof. G. Nakos[1]

Suppose we have an electrical network (i.e., a series of electrical circuits) involving emfs (electromotive forces or batteries), resistors, capacitors and inductors. We use the following "dictionary" to translate between the diagram and the DEs.

EE object	term in DE (the voltage drop)	units	symbol
charge	$q = \int i(t)\,dt$	coulombs	
current	$i = q'$	amps	
emf	$e = e(t)$	volts V	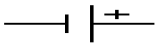
resistor	$Rq' = Ri$	ohms Ω	
capacitor	$C^{-1}q$	farads	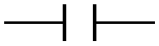
inductor	$Lq'' = Li'$	henries	

Kirchoff's First Law: The algebraic sum of the currents travelling into any node is zero.

Kirchoff's Second Law: The algebraic sum of the voltage drops around any closed loop is zero.

Example 1: Consider the simple RC circuit given by the following diagram.

According to Kirchoff's 2nd Law and the above "dictionary", this circuit corresponds to the DE

$$q' + 5q = 2.$$

The general solution to this is $q(t) = 1 + ce^{-2t}$, where c is a constant which depends on the initial charge on the capacitor. $\square$

[1]These notes are placed in the public domain, except for the graphics which are licensed under the Attribution-ShareAlike Creative Commons license, `http://creativecommons.org/about/licenses/meet-the-licenses`. The diagrams were created using SAGE and and GIMP `http://www.gimp.org/` by the first author. Last modified 2009-3-25.

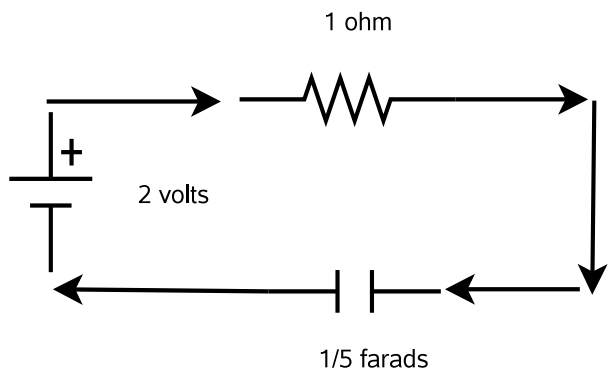

Figure 1: A simple circuit.

Aside: The convention of assuming that electricity flows from positive to negative on the terminals of a battery is referred to as "conventional flow". The physically-correct but opposite assumption is referred to as "electron flow". We shall assume the "electron flow" convention.

Example 2: Consider the network given by the following diagram.

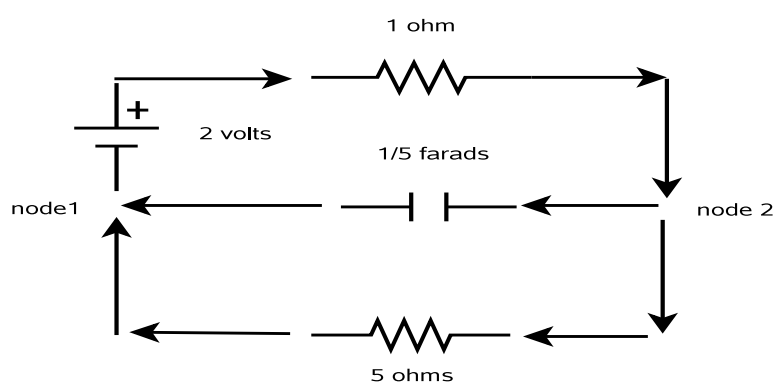

Figure 2: A network.

Assume the initial charges are 0.

One difference between this circuit and the one above is that the charges on the three paths between the two nodes (labeled node 1 and node 2 for convenience) must be labeled. The charge passing through the 5 ohm resistor we label q_1, the charge on the capacitor we denote by q_2, and the charge passing through the 1 ohm resistor we label q_3.

There are three closed loops in the above diagram: the "top loop", the "bottom loop", and the "big loop". The loops will be traversed in the "clockwise" direction. Note the "top loop" looks like the simple circuit given in Example 1 but it cannot be solved in the same way, since the current passing through the 5 ohm resistor will affect the charge on the capacitor. This current is not present in the circuit of Example 1 but it does occur in the network above.

Kirchoff's Laws and the above "dictionary" give

$$\begin{cases} q_3' + 5q_2 = 2, & q_1(0) = 0, \\ 5q_1' - 5q_2 = 0, & q_2(0) = 0, \\ 5q_1' + q_3' = 2, & q_3(0) = 0. \end{cases}$$

Notice the minus sign in front of the term associated to the capacitor ($-5q_2$). This is because we are going clockwise, against the "direction of the current". Kirchoff's 1st law says $q_3' = q_1' + q_2'$. Since $q_1(0) = q_2(0) = q_3(0) = 0$, this implies $q_3 = q_1 + q_2$. After taking Laplace transforms of the 3 differential equations above, we get

$$sQ_3(s) + 5Q_2(s) = 2/s, \qquad 5sQ_1(s) - 5Q_2(s) = 0.$$

Note you don't need to take th eLT of the 3rd equation since it is the sum of the first two equations. The LT of the above $q_1 + q_2 = q_3$ (Kirchoff's law) gives $Q_1(s) + Q_2(s) - Q_3(s) = 0$. We therefore have this matrix equation

$$\begin{pmatrix} 0 & 5 & s \\ 5s & 0 & s \\ 1 & 1 & -1 \end{pmatrix} \begin{pmatrix} Q_1(s) \\ Q_2(s) \\ Q_3(s) \end{pmatrix} = \begin{pmatrix} 2/s \\ 0 \\ 0 \end{pmatrix}.$$

The augmented matrix describing this system is

$$\begin{pmatrix} 0 & 5 & s & 2/s \\ 5s & 0 & s & 2/3 \\ 1 & 1 & -1 & 0 \end{pmatrix}$$

The row-reduced echelon form is

$$\begin{pmatrix} 1 & 0 & 0 & 2/(s^3 + 6s^2) \\ 0 & 1 & 0 & 2/(s^2 + 6s) \\ 0 & 0 & 1 & 2(s+1)/(s^2(s+6)) \end{pmatrix}$$

Therefore

$$
\begin{aligned}
Q_1(s) &= \tfrac{2}{s^2(s+6)} = \tfrac{1/18}{s+6} - \tfrac{1/18}{s} + \tfrac{1/3}{s^2}, \\
Q_2(s) &= \tfrac{2}{s(s+6)}, \\
Q_3(s) &= \tfrac{2(s+1)}{s^2(s+6)} = -\tfrac{5/18}{s+6} + \tfrac{5/18}{s} + \tfrac{1/3}{s^2}.
\end{aligned}
$$

This implies

$$q_1(t) = -1/18+e^{-6t}/18+t/3, \quad q_2(t) = 1/3-e^{-6t}/3, \quad q_3(t) = 5/18-5e^{-6t}/18+t/3.$$

These are plotted in Figure 3.

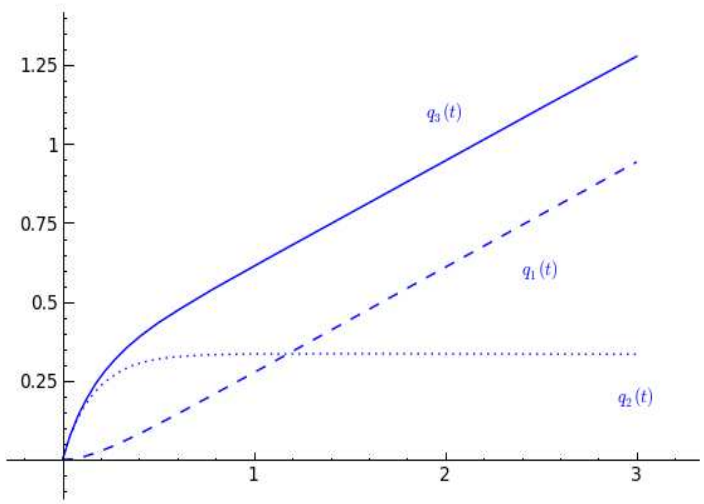

Figure 3: Another network.

□

This computation can be done in SAGE as well:

SAGE

```
sage: s,t = var("s,t")
sage: A = matrix([[0,5,s,2/s],[5*s,0,s,2/s],[1,1,-1,0]])
sage: B = A.echelon_form(); B

[   1    0     0    2/(5*s^2) - (-2/(5*s) - 2/(5*s^2))/(5*(-s/5 - 6/5))   ]
[   0    1     0    2/(5*s) - (-2/(5*s) - 2/(5*s^2))*s/(5*(-s/5 - 6/5))   ]
[   0    0     1    (-2/(5*s) - 2/(5*s^2))/(-s/5 - 6/5)                   ]
sage: Q1 = B[0,3]; Q1
2/(5*s^2) - (-2/(5*s) - 2/(5*s^2))/(5*(-s/5 - 6/5))
```

```
sage: q1 = Q1.inverse_laplace(s,t); q1
e^(-(6*t))/18 + t/3 - 1/18
sage: Q2 = B[1,3]; Q2
2/(5*s) - (-2/(5*s) - 2/(5*s^2))*s/(5*(-s/5 - 6/5))
sage: q2 = Q2.inverse_laplace(s,t); q2
1/3 - e^(-(6*t))/3
sage: Q3 = B[2,3]; Q3
(-2/(5*s) - 2/(5*s^2))/(-s/5 - 6/5)
sage: q3 = Q3.inverse_laplace(s,t); q3
-5*e^(-(6*t))/18 + t/3 + 5/18
```

Example 3: Consider the network given by the following diagram.

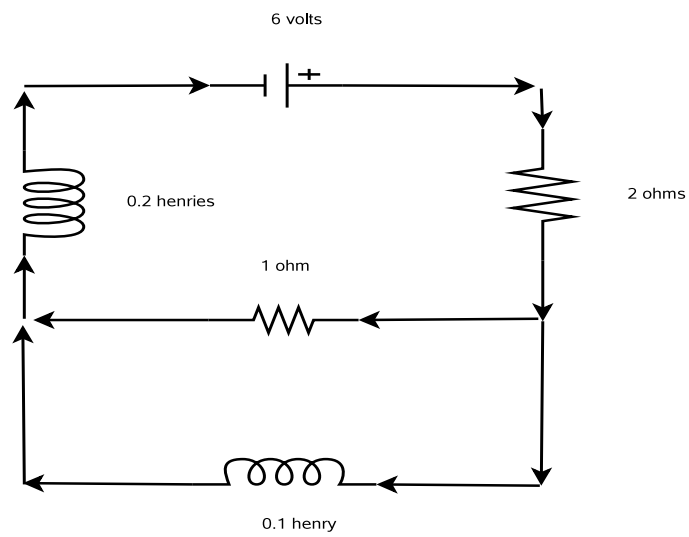

Figure 4: Another network.

Assume the initial currents are 0.

Using Kirchoff's Laws, you get a system

$$\begin{cases} i_1 - i_2 - i_3 = 0, \\ 2i_1 + i_2 + (0.2)i_1' = 6, \\ (0.1)i_3' - i_2 = 0. \end{cases}$$

Take LTs of these three DEs. You get a 3×3 system in the unknowns $I_1(s) = \mathcal{L}[i_1(t)](s)$, $I_2(s) = \mathcal{L}[i_2(t)](s)$, and $I_3(s) = \mathcal{L}[i_3(t)](s)$. The augmented matrix of this system is

$$\begin{pmatrix} 1 & -1 & -1 & 0 \\ 2+s/5 & 1 & 0 & 6/s \\ 0 & -1 & s/10 & 0 \end{pmatrix}$$

(Check this yourself!) The row-reduced echelon form is

$$\begin{pmatrix} 1 & 0 & 0 & \frac{30(s+10)}{s(s^2+25s+100)} \\ 0 & 1 & 0 & \frac{30}{s^2+25s+100} \\ 0 & 0 & 1 & \frac{300}{s(s^2+25s+100)} \end{pmatrix}$$

Therefore

$$I_1(s) = -\frac{1}{s+20} - \frac{2}{s+5} + \frac{3}{s}, \quad I_2(s) = -\frac{2}{s+20} + \frac{2}{s+5}, \quad I_3(s) = \frac{1}{s+20} - \frac{4}{s+5} + \frac{3}{s}.$$

This implies

$$i_1(t) = 3 - 2e^{-5t} - e^{-20t}, \quad i_2(t) = 2e^{-5t} - 2e^{-20t}, \quad i_3(t) = 3 - 4e^{-5t} + e^{-20t}.$$

□

Exercise: Use SAGE to solve for $i_1(t)$, $i_2(t)$, and $i_3(t)$ in the above problem.

References

[N] Wikipedia entry for electrical networks: `http://en.wikipedia.org/wiki/Electrical_network`