SM212 Final Examination: Multiple Choice Section: Answer Key

19 December 2009 0755

The Multiple Choice part of the exam counts 50%. Fill in the letter of the best answer on the bubble sheet. There is no penalty for wrong answers.

1. Which of the following differential equations is linear?

   a) $\frac{dy}{dx} = x + y^2$ b) $y\frac{dy}{dx} = e^x$ c) $\frac{dy}{dx} = 1 + x\cos y$ d) $\frac{dy}{dx} = x^2 + y$

   Ans: d)

2. The differential equation $xy'' + y' + xy = 0$ is

   a) linear and nonhomogeneous b) linear and homogeneous c) first order d) all of these

   Ans: b)

3. An integrating factor for the linear differential equation $x\frac{dy}{dx} = x^4e^x + 3y$ is

   a) x^{-3} b) x^3 c) e^x d) xe^x

   Ans: a) Standard form: $\frac{dy}{dx} - \frac{3}{x}y = x^3e^x \to \mu = \exp(-\int \frac{3}{x}dx) = x^{-3}$

4. The cooling of an object is described by Newton's law of cooling: $T'(t) = k(T(t) - T_m)$. An object at temperature 80 °F is taken outside where the temperature is 40 °F. After 2 minutes the temperature of the object has fallen to 70 °F. Then $k =$

   a) $-\ln\frac{3}{4}$ b) $\ln 40$ c) $-\ln 40$ d) $\frac{1}{2}\ln\frac{3}{4}$

   Ans: d): $\int \frac{dT}{T-40} = \int kdt \to \ln(T-40) = kt + C \to C = \ln(80-40) = \ln 40 \to \ln(70-40) = 2k + \ln 40 \to k = \frac{1}{2}(\ln 30 - \ln 40) = \frac{1}{2}\ln\frac{3}{4}$

5. The appropriate form for the particular solution to the differential equation $y'' + 9y = 3 - 2x\sin 3x$ is $y_p =$

   a) $A + Bx + C\cos 3x + D\sin 3x$ b) $A + B\cos 3x + C\sin 3x$

   c) $A + Bx\cos 3x + Cx\sin 3x + Dx^2\cos 3x + Ex^2\sin 3x$

   d) $A + Bx\cos 3x + Cx\sin 3x$

Ans: c): Roots of the complementary are $m = \pm 3i$, roots of the annihilator $A(D) = D(D^2+9)^2$are $m = 0, \pm 3i, \pm 3i \to m = 0, \pm 3i, \pm 3i \pm 3i \to y_p = A + Bx\cos 3x + Cx\sin 3x + Dx^2\cos 3x + Ex^2\sin 3x$

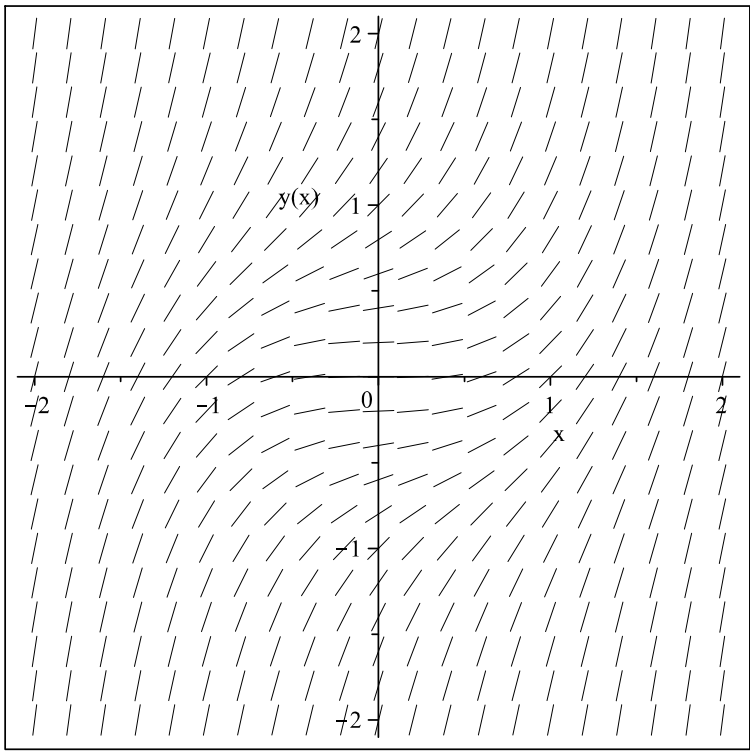

6. The direction field above corresponds to the differential equation

   a) $y' = x^2 + y^2$ b) $y' = y - 1$ c) $y' = x - y$ d) $y' = y^2$

   Ans: a): $y' = 1$ at $(0,1)$ eliminates b) and c). $y' = 1$ at $(1,0)$ eliminates d).

7. For the direction field above and an initial condition $y(0) = 1$, the Euler method approximation to $y(1)$ with a step size of $h = 1$ is

   a) 0 b) 2 c) -2 d) 1

   Ans: b)

8. The solution to the spring equation $mx'' + 2x' + 2x = 0$ is underdamped if and only if

   a) $m < 1$ b) $m > 1$ c) $m > \frac{1}{2}$ d) $m > \frac{1}{4}$

   Ans: c): Underdamped if auxilliary roots are complex$\to 2^2 - 4 \cdot m \cdot 2 < 0 \to 4 - 8m < 0 \to m > \frac{1}{2}$

9. For the spring equation $mx'' + 2x' + 2x = 4\sin \pi t$ the steady-state part of the solution oscillates sinusoidally with a period $T =$

   a) $\frac{\pi}{m}$ Hz b) $m\pi$ Hz c) π d) 2

   Ans: d): Period of the steady-state is period of the forcing function $\rightarrow$ $T = \frac{2\pi}{\pi} = 2$

10. If the Laplace transform of a function $f(t)$ is $F(s) = -\frac{s}{s^3+1}$, then $L\{tf(t)\} =$

    a) $\frac{s^2}{s^3+1}$ b) $t \sin t$ c) $\frac{3s^3}{(s^3+1)^2}$ d) $\frac{1-2s^3}{(s^3+1)^2}$

    Ans: $L\{tf(t)\} = (-1)^1 F'(s) = -\frac{d}{ds}\left(-\frac{s}{s^3+1}\right) = \frac{1-2s^3}{(s^3+1)^2}$

11. If $f(t) = 1 - tU(t-1) + U(t-3)$, where $U(t)$ is the unit step function, then $f(4) =$

    a) -2 b) 0 c) 2 d) 4

    Ans: a): $f(4) = 1 - 4U(3) + U(1) = -2$

12. If $f(t) = 1 - tU(t-1) + U(t-3)$, where $U(t)$ is the unit step function, then $L\{f(t)\} =$

    a) $\frac{1}{s} - \frac{e^{-s}}{s^2} + \frac{e^{-3s}}{s}$ b) $\frac{1}{s} - t\frac{e^{-s}}{s} + \frac{e^{-3s}}{s}$

    c) $\frac{1}{s} - \frac{e^{-s}}{(s-1)^2} + \frac{e^{-3s}}{s}$ d) $\frac{1}{s} - \left(\frac{1}{s^2} + \frac{1}{s}\right)e^{-s} + \frac{e^{-3s}}{s}$

    Ans: d): $L\{f(t)\} = \frac{1}{s} - e^{-s}L\{t+1\} + \frac{e^{-3s}}{s} = \frac{1}{s} - e^{-s}\left(\frac{1}{s^2} + \frac{1}{s}\right) + \frac{e^{-3s}}{s}$

13. Let $Y(s)$ denote the Laplace transform of $y(t)$. For the initial value problem $y'' + y = \sin t, y(0) = 0, y'(0) = 1$, $Y(s) =$

    a) $\frac{1}{s^2} - \frac{1}{s^3} + \frac{1}{s^2(s^2+1)}$ b) $\frac{s}{s^2+1} + \frac{1}{(s^2+1)^2}$

    c) $\frac{1}{s^2+1} + \frac{s}{(s^2+1)^2}$ d) $\frac{1}{s^2+1} + \frac{1}{(s^2+1)^2}$

    Ans: d): $s^2Y(s) - s \cdot 0 - 1 + Y(s) = \frac{1}{s^2+1} \rightarrow Y(s) = \frac{1}{s^2+1} + \frac{1}{(s^2+1)^2}$

14. If $A = \begin{bmatrix} 1 & 2 & 3 \\ 6 & 5 & 4 \end{bmatrix}, B = \begin{bmatrix} 1 & 2 \\ 4 & 3 \end{bmatrix}$, and $C = \begin{bmatrix} 4 \\ 3 \\ 2 \end{bmatrix}$, which of the following products exists

    a) AB b) BC c) AC d) CA

    Ans: c)

15. An eigenvalue of the matrix $\begin{bmatrix} 2 & 1 & -2 \\ -3 & 0 & 4 \\ -2 & -1 & 4 \end{bmatrix}$ is $\lambda = 2$. An eigenvector corresponding to this eigenvalue is

    a) $\begin{bmatrix} 1 \\ 2 \\ 1 \end{bmatrix}$ b) $\begin{bmatrix} 1 \\ -2 \\ 1 \end{bmatrix}$ c) $\begin{bmatrix} 0 \\ 0 \\ 0 \end{bmatrix}$ d) $\begin{bmatrix} 0 \\ 2 \\ 1 \end{bmatrix}$

Ans: d): $\text{rref}\left(\begin{bmatrix} 0 & 1 & -2 \\ -3 & -2 & 4 \\ -2 & -1 & 2 \end{bmatrix}\right) = \begin{bmatrix} 1 & 0 & 0 \\ 0 & 1 & -2 \\ 0 & 0 & 0 \end{bmatrix}$

16. The matrix $A = \begin{bmatrix} 2 & 2 \\ 1 & 1 \end{bmatrix}$ has which of the following as an eigenvalue

    a) -1 b) 0 c) i d) $3 + i\sqrt{7}$

    Ans: b): $\det(A - \lambda I) = 0 \to (2-\lambda)(1-\lambda) - 2 = 0 \to \lambda^2 - 3\lambda = 0 \to \lambda = 0, 3$

17. With a step size of $h = 0.1$ the Euler method approximation to the solution $x(0.1)$ of the initial value problem $\frac{dx}{dt} = y + t$, $\frac{dy}{dt} = -x - t,\ x(0) = 1,\ y(0) = -2$ is

    a) 0.8 b) -2.1 c) $0.9 + t$ d) $0.9 - t$

    Ans: a): $x_1 = 1 + 0.1\,(-2 + 0) = 0.8$

18. Let $F(x)$ denote the Fourier series of $f(x) = \begin{cases} 2, & -2 \le x \le -1 \\ |x|, & -1 < x < 1 \\ -2, & 1 \le x \le 2 \end{cases}$. Then $F(1) =$

    a) -2 b) -1 c) $-\frac{1}{2}$ d) 0.

    Ans: c): $F(1) = \frac{1+(-2)}{2} = -\frac{1}{2}$

19. For the Fourier series $\frac{a_0}{2} + \sum_{n=1}^{\infty} \left(a_n \cos \frac{n\pi x}{L} + b_n \sin \frac{n\pi x}{L}\right)$ of the function $f(x)$ given in Problem 18 $a_0 =$

    a) 0 b) $2, 1$ and -2 c) $\frac{1}{4}$ d) $\frac{1}{2}$

    Ans: d): $a_0 = \frac{1}{L}\int_{-2}^{2} f(x)dx = \frac{1}{2}\left(\int_{-2}^{-1} 2dx + \int_{-1}^{1} |x|\,dx + \int_{1}^{2}(-2)dx\right) = \frac{1}{2}(2 + 1 - 2) = \frac{1}{2}$

20. The partial differential equation $\frac{\partial^2 u}{\partial t^2} = \frac{\partial^2 u}{\partial x^2}$ has solutions of the form $u(x,t) = X(x)T(t)$ where

    a) $X''(x) = \mu X(x), T'(t) = \mu T(t)$ b) $X''(x) = X(x), T''(t) = 2T(t)$

    c) $X''(x) = \mu X(x), T'(t) = -\mu T(t)$ d) $X''(x) = \mu X(x), T''(t) = \mu T(t)$

    Ans: d): $X(x)T''(t) = X''(x)T(t) \to \frac{T''(t)}{T(t)} = \frac{X''(x)}{X(x)} = \mu$

SM212 Final Examination: Written Section: Answer Key

19 December 2009, 0755

The Written part of the exam counts 50%. On the problems in the written section you are to show the steps of the solution process in detail.

1.

   (a) Find the general solution to $x^2 \frac{dy}{dx} = 4 - 3xy$
   Ans: Standard form: $\frac{dy}{dx} + \frac{3}{x}y = \frac{4}{x^2}$. Integrating factor: $\mu = e^{\int \frac{3}{x}dx} = x^3$. Multiply by μ: $\frac{d}{dx}\left(x^3 y\right) = 4x$. Integrate: $x^3 y = 2x^2 + C \rightarrow \boxed{y = \frac{2}{x} + \frac{C}{x^3}}$

   (b) Solve the initial value problem $\frac{dy}{dx} = 2x\cos^2 y,\ y(0) = \frac{\pi}{4}$.
   Ans: Separable DE: $\frac{dy}{\cos^2 y} = 2xdx \rightarrow \int \sec^2 y dy = \int 2xdx \rightarrow \tan y = x^2 + C$. Fit IC: $\tan\frac{\pi}{4} = C \rightarrow \boxed{\tan y = x^2 + 1}$

2. A tank contains 100 gallons of water with 100 lbs of salt dissolved in it. Saltwater with a concentration of 4 lb/gal is pumped into the tank at a rate of 1 gal/min. The well-stirred mixture is pumped out at the rate of 2 gal/min.

   (a) Express the volume of water in the tank as a function of time. *Ans*: $\boxed{V = 100 - t}$

   (b) Find the amount, in pounds, of salt in the tank as a function of time.
   Ans: $\frac{dA}{dt} = Rate_{in} - Rate_{out} = 4\frac{\text{lb}}{\text{gal}} \cdot 1\frac{\text{gal}}{\text{min}} - \frac{A}{100-t}\frac{\text{lb}}{\text{gal}} \cdot 2\frac{\text{gal}}{\text{min}}$. Linear DE: $\frac{dA}{dt} + \frac{2}{100-t}A = 4 \rightarrow \mu = e^{\int \frac{2}{100-t}dt} = e^{-2\ln(100-t)} = (100-t)^{-2} \rightarrow \frac{d}{dt}\left((100-t)^{-2}A\right) = 4(100-t)^{-2} \rightarrow (100-t)^{-2}A = 4\int (100-t)^{-2}dt = 4(100-t)^{-1} + C \rightarrow A = 4(100-t) + C(100-t)^2$. $A(0) = 100\,\text{lb} \rightarrow 100 = 400 + 10000C \rightarrow C = -\frac{300}{10000} = -\frac{3}{100} \rightarrow \boxed{A = 4(100-t) - \frac{3}{100}(100-t)^2}$

(c) At what time does the tank contain the largest amount of salt? How much salt is in the tank at that time?

Ans: $\frac{dA}{dt} = 0 \to -4 + \frac{3}{50}(100 - t) = 0 \to \boxed{t = \frac{100}{3}\text{ min}}$. $A\left(\frac{100}{3}\right) = 4(100 - \frac{100}{3}) - \frac{3}{100}(100 - \frac{100}{3})^2 = \boxed{133.33\,\text{lb}}$

3. Use undetermined coefficients (or annihilators) to solve the initial value problem

$$y'' - 3y' + 2y = 6e^x,\ y(0) = 1,\ y'(0) = -2$$

Ans: Solve complemetary: $m^2 - 3m + 2 = 0 \to (m-1)(m-2) = 0 \to m = 1, 2 \to y_c = c_1e^x + c_2e^{2x}$. Find annihilator for RHS: $A(D) = D - 1$.Apply annihilator: $(D-1)(D-1)(D-2)y = 0 \to m = 1, 1, 2 \to y_{almostp} = \underbrace{c_1e^x + c_2e^{2x}}_{\text{In}y_c} + c_3xe^x \to y_p = c_3xe^x$. Plug y_p into original DE: $y_p' = c_3e^x + c_3xe^x, y_p'' = 2c_3e^x + xe^x \to 2c_3e^x + xe^x - 3\left(c_3e^x + c_3xe^x\right) + 2c_3xe^x = 6e^x \to -c_3e^x = 6e^x \to y_p = -6xe^x$. General solution is $y = y_c + y_p = c_1e^x + c_2e^{2x} - 6xe^x$. Fit IC's: $y' = c_1e^x + 2c_2e^{2x} - 6e^x - 6xe^x, y(0) = 1 \to c_1 + c_2 = 1, y'(0) = -2 \to c_1 + 2c_2 - 6 = -2 \to c_1 = -2, c_2 = 3 \to \boxed{y = -2e^x + 3e^{2x} - 6xe^x}$

4. The displacement of a weight in an undamped mass-spring system subject to an external force $F(t) = 64\sin 4t$ is governed by the differential equation

$$x'' + 16x = 64\sin 4t$$

(a) Assuming initial conditions $x(0) = 1, x'(0) = -1$, use **Laplace transforms** to solve this initial value problem.

Ans: $s^2X(s) - s + 1 + 16X(s) = 64 \cdot \frac{4}{s^2+16} \to X(s) = \frac{s-1}{s^2+16} + \frac{256}{(s^2+16)^2} \to x(t) = \cos 4t - \frac{1}{4}\sin 4t + 2\sin 4t - 8t\cos 4t \to \boxed{x(t) = \cos 4t + \frac{7}{4}\sin 4t - 8t\cos 4t}$

(b) The system is at resonance. What feature of the solution is characteristic of an undamped system at resonance?

Ans: The term $-8t\cos 4t$ causes oscillations to grow without bound.

5. For the circuit in Figure 1 the charge q on the capacitor and the current i_3 in the right branch satisfy the system of differential equations

$$q' + \frac{1}{RC}q + i_3 = 0,\ i_3' - \frac{1}{LC}q = 0$$

(a) Use Kirchoff's second law and the junction rule to derive the first equation.

Ans: Going around the left loop $Ri_1 + \frac{1}{C}q = 0 \to i_1 + \frac{1}{RC}q = 0$. The junction rule gives $i_1 = i_2 + i_3 = q' + i_3$. Thus $q' + i_3 + \frac{1}{RC}q = 0$.

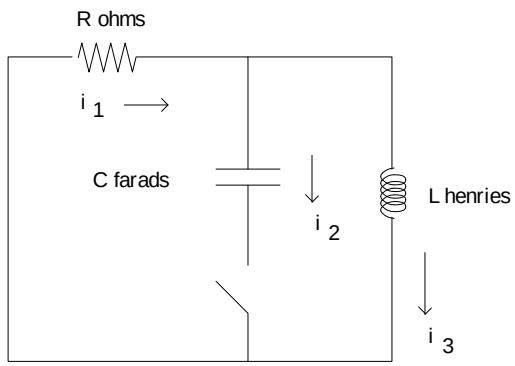

Figure 1: Network for Problem 5.

(b) When the switch in the circuit is closed at time $t = 0$, the current i_3 is 0 amps and the charge on the charge on the capacitor is 5 coulombs. With $R = 2, L = 3, C = 1/6$ **use eigenvalues and eigenvectors** to find the charge $q(t)$ on the capacitor.

Ans: $\begin{bmatrix} q \\ i_3 \end{bmatrix}' = \begin{bmatrix} -\frac{1}{RC} & -1 \\ \frac{1}{LC} & 0 \end{bmatrix} \begin{bmatrix} q \\ i_3 \end{bmatrix} \to \begin{bmatrix} q \\ i_3 \end{bmatrix}' = \begin{bmatrix} -3 & -1 \\ 2 & 0 \end{bmatrix} \begin{bmatrix} q \\ i_3 \end{bmatrix}$.

Find eigenvalues $\det \begin{bmatrix} -3-\lambda & -1 \\ 2 & -\lambda \end{bmatrix} = \lambda^2 + 3\lambda + 2 = 0 \to \lambda = -1, -2$. Eigenvectors: $\lambda = -1$: $\begin{bmatrix} -2 & -1 \\ 2 & 1 \end{bmatrix} \begin{bmatrix} v_1 \\ v_2 \end{bmatrix} = \begin{bmatrix} 0 \\ 0 \end{bmatrix} \to \begin{bmatrix} v_1 \\ v_2 \end{bmatrix} = \begin{bmatrix} 1 \\ -2 \end{bmatrix}$, $\lambda = -2$: $\begin{bmatrix} -1 & -1 \\ 2 & 2 \end{bmatrix} \begin{bmatrix} v_1 \\ v_2 \end{bmatrix} = \begin{bmatrix} 0 \\ 0 \end{bmatrix} \to \begin{bmatrix} v_1 \\ v_2 \end{bmatrix} = \begin{bmatrix} 1 \\ -1 \end{bmatrix}$. The general solution is $\begin{bmatrix} q \\ i_3 \end{bmatrix} = c_1 \begin{bmatrix} 1 \\ -2 \end{bmatrix} e^{-t} + c_2 \begin{bmatrix} 1 \\ -1 \end{bmatrix} e^{-2t}$.

Fit IC's: $c_1 + c_2 = 5, -2c_1 - c_2 = 0 \to c_1 = -5, c_2 = 10 \to \boxed{q(t) = -5e^{-t} + 10e^{-2t}}$

6.

(a) Find the Fourier sine series of the function $f(x) = \begin{cases} 0, & 0 \le x \le 2 \\ 50x, & 2 < x \le 4 \end{cases}$.

Ans: $B_n = \frac{2}{L}\int_0^L f(x)\sin\frac{n\pi x}{L}dx = \frac{2}{4}\int_2^4 50x\sin\frac{n\pi x}{4}dx = \frac{200}{n^2\pi^2}\left(n\pi\cos\frac{n\pi}{2} - 2\left(\sin\frac{n\pi}{2} + n\pi\cos n\pi\right)\right) \to$

$\boxed{FSS(x) = \sum_{n=1}^{\infty} \frac{200}{n^2\pi^2}\left(n\pi\cos\frac{n\pi}{2} - 2\left(\sin\frac{n\pi}{2} + n\pi\cos n\pi\right)\right)\sin\frac{n\pi x}{4}}$

(b) The temperature $u(x,t)$ of a thin bar of length 4 satisfies the following conditions

$$\frac{\partial u}{\partial t} = 3\frac{\partial^2 u}{\partial x^2},\ u(0,t) = u(4,t) = 0,\ u(x,0) = f(x)$$

where $f(x)$ is given in (6a).

i. Use your answer in (6a) to find $u(x,t)$. Show all steps of the separation of variables process clearly. Write your answer in summation notation.

Ans: 1. Find solutions to pde of the form $u(x,t) = X(x)T(t)$: $\frac{\partial u}{\partial t} = 3\frac{\partial^2 u}{\partial x^2} \to X(x)T'(t) = 3X''(x)T(t) \to \frac{T'(t)}{T(t)} = 3\frac{X''(x)}{X(x)} = \mu$, a constant.

T-equation: $T'(t) = \mu T(t) \to T(t) = Ce^{\mu t} \to \mu < 0$ so that the bar's temperature cools down to 0 degrees. Let $\mu = -\lambda^2 \to T(t) = Ce^{-\lambda^2 t}$.

X-equation: $3X''(x) + \lambda^2 X(x) = 0 \to X(x) = A\cos\frac{\lambda}{\sqrt{3}}x + B\sin\frac{\lambda}{\sqrt{3}}x \to u(x,t) = X(x)T(t) = \left(A\cos\frac{\lambda}{\sqrt{3}}x + B\sin\frac{\lambda}{\sqrt{3}}x\right)Ce^{-\lambda^2 t} = \left(A\cos\frac{\lambda}{\sqrt{3}}x + B\sin\frac{\lambda}{\sqrt{3}}x\right)e^{-\lambda^2 t}$.

2. Fit separated solutions to boundary conditions:

Left BC $u(0,t) = 0 \to Ae^{-\lambda^2 t} = 0 \to A = 0$.

Update: $u(x,t) = B\sin\frac{\lambda}{\sqrt{3}}xe^{-\lambda^2 t}$

Right BC $u(4,t) = 0 \to B\sin\frac{4\lambda}{\sqrt{3}}e^{-\lambda^2 t} = 0 \to \sin\frac{4\lambda}{\sqrt{3}} = 0 \to \frac{4\lambda}{\sqrt{3}} = n\pi \to \lambda = \frac{\sqrt{3}n\pi}{4}$.

Update: $u(x,t) = B\sin\frac{n\pi x}{4}e^{-3(n\pi/4)^2 t}$.

3. Superposition to get the general solution: $u(x,t) = \sum_{n=1}^{\infty} B_n \sin\frac{n\pi x}{4}e^{-3(n\pi/4)^2 t}$.

4. Fit initial condition: $u(x,0) = \sum_{n=1}^{\infty} B_n \sin\frac{n\pi x}{4} = f(x)$.

From Problem 6a $B_n = \frac{200}{n^2\pi^2}\left(n\pi\cos\frac{n\pi}{2} - 2\left(\sin\frac{n\pi}{2} + n\pi\cos n\pi\right)\right) \to$

$$\boxed{u(x,t) = \sum_{n=1}^{\infty}\frac{200}{n^2\pi^2}\left(n\pi\cos\frac{n\pi}{2} - 2\left(\sin\frac{n\pi}{2} + n\pi\cos n\pi\right)\right)\sin\left(\frac{n\pi}{4}x\right)e^{-3(n\pi/4)^2 t}}$$

ii. Use the first two non-zero terms of your answer in (6(b)i) to approximate $u(1, 0.5)$.

Ans: $u(1,0.5) = \frac{200}{\pi^2}\left(\pi\cos\frac{\pi}{2} - 2\left(\sin\frac{\pi}{2} + \pi\cos\pi\right)\right)\sin\left(\frac{\pi}{4}\right)e^{-3(\pi/4)^2 0.5} + \frac{200}{4\pi^2}\left(2\pi\cos\pi - 2\left(2\pi\cos\pi\right)\right)\sin\left(\frac{2\pi}{4}\right)e^{-3(2\pi/4)^2 0.5} = 24.330 + 0.786\,11 = \boxed{25.116}$