Uncertainty of a Viscosity Measurement
EM324 Lab Exercise

Background: Viscosity is the property of a fluid - liquid or gas - that is a measure of the fluids resistance to shear. Viscosity arises due to internal friction between the molecules of the fluid; for, whenever any part of a fluid is caused to move, neighboring parts tend to be carried along too. This resistance to the development of velocity differences within a fluid is the essential feature of viscosity and forms the basis of the quantitative assessment of viscosity.

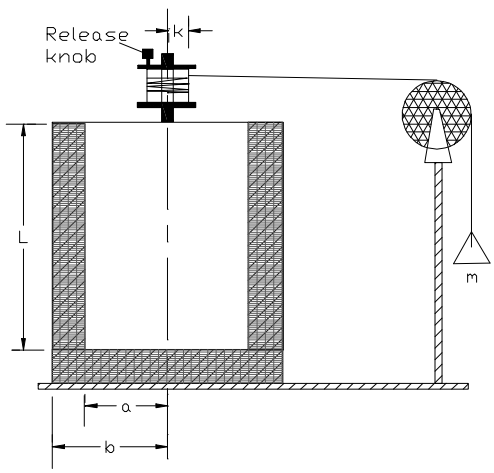

Figure 1: Concentric Cylinder Viscosity Apparatus

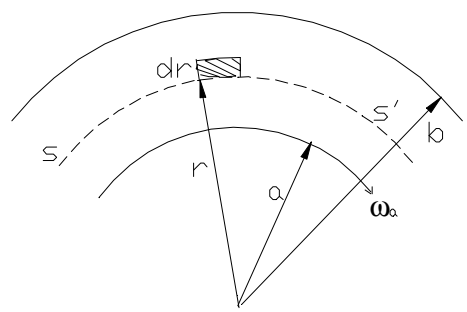

Figure 2: Differential Analysis Diagram

Apparatus and Theory: The Stormer viscometer apparatus consists of two concentric cylinders between which the fluid is contained. See the figures above. If the inner cylinder rotates while the outer cylinder remains fixed, then a shear stress is applied to the fluid. At terminal velocity, the torque applied to the inner cylinder by the falling weight is balanced by the viscous torque.

T_{weight} = *[Force][moment arm]= [mg][k] = T*

$T_{viscous}$ = *[shear stress][surface area][moment arm]= [t(r)][2prL][r]= [t(r)]2pr^{2}L*

$$t(r) = -m\frac{du}{dr} = -m\frac{d(wr)}{dr} = -m\left[w + r\frac{dw}{dr}\right]$$

$$T = -2pLr^2 m\left[w + r\frac{dw}{dr}\right]$$

$$\frac{-T}{2pmL} = r^2 w + r^3\frac{dw}{dr}$$

where: *T* is the torque
u is the fluid velocity
? is the angular velocity of the inner cylinder and
μ is the viscosity.

Solve the ODE with boundary condition ? (r = b) = 0

$$w(r) = \frac{T}{2pmL}\left(\frac{1}{r^2} - \frac{1}{rb}\right)$$

At the inner cylinder (r = a)

$$w_a = \frac{T}{2pmL}\left(\frac{1}{a^2} - \frac{1}{ab}\right) \quad \text{For } T = mgk \qquad w_a = \frac{mgk}{2pmL}\left(\frac{1}{a^2} - \frac{1}{ab}\right)$$

The angular velocity of the inner cylinder will equal the angular velocity of the pulley

$$w_a = w_k = \frac{V_k}{k} = \frac{s}{kt}$$

where: V_k = the linear velocity of a point on the edge of the pulley at r = k
s = the distance of fall of the weight
t = time of fall

The equation for viscosity can now be developed in terms of parameters that can be easily measured.

$$m = \left[\frac{gk^2}{2pL}\frac{(b-a)}{a^2b}\right]\frac{mt}{s}$$

The equation can be re-written as: $m = c\dfrac{mt}{s}$

where c contains some constants and all of the necessary dimensions of the apparatus and has units ($1/sec^2$).

$$c = \frac{gk^2}{2pL}\frac{b-a}{a^2b}$$

Note that for a particular fluid, the relationship between distance of fall, s, and the time of fall, t, is linear.

Procedure: The viscometers will be set up and filled with a fluid before you enter the lab. Your instructor or the lab tech will demonstrate how to operate the apparatus.

Measure the time, t, it takes for a particular mass, m, to travel a distance, s = 1 m, on one of the viscometers filled with the fluid. Take data on at least 7 different masses, repeating the test for one mass 10 times. Note that the weight must be allowed to free fall a short distance so that terminal velocity is reached before measurements start.

Using the linear expression developed above, perform a least-squares regression analysis to determine the viscosity. Plot your data points so that the viscosity is represented by the slope of the line. (Plot s/c m vs t). Include confidence intervals on the intercept.

Perform a complete uncertainty analysis of the results, completing the attached, including both bias and precision errors. The precision errors should be based on 95% confidence. Include the uncertainty bands of the slope on the data plot.

State the measured viscosity and uncertainty for 95% confidence. Compare your measured results to the expected results from a property table and the viscosity measured in the classroom by an electronic viscometer. Which measurement(s) contribute the most to the overall uncertainty of viscosity? Does the expected result match your result within the uncertainty of the measurement at 95% confidence? If not, why?

Measurement x	Bias Error $B_x = \left[\sum_i B_i^2\right]^{1/2}$	Precision Error $P_x = t\left[\sum_i S_i^2\right]^{1/2}$	Uncertainty in Measurement $W_x = \left[B_x^2 + P_x^2\right]^{1/2}$	Sensitivity $\frac{\partial m}{\partial x}$	Overall Contribution $\left(W_x \frac{\partial m}{\partial x}\right)^2$
k					
a					
b					
L					
s					
m					
t					

$$Wm = \sqrt{\sum\left(W_x \frac{\partial m}{\partial x}\right)^2}$$

μ = _____ ±_____@ 95% confidence