TO MY WIFE, HOYING TSAI WU
AND TO MY CHILDREN, ANNA, JOY, SHEREE AND PATRICIA

Contents

Preface **xiii**

Acknowledgements

Chapter 1 **Basic Concepts** **1**
1.1. Thermodynamics 1
1.2. Basic Laws 2
1.3. Why Study Thermodynamics? 3
1.4. Dimensions and Units 5
1.5. Systems 11
1.6. Properties of a System 12
1.7. Equilibrium State 23
1.8. Processes and Cycles 24
1.9. CyclePad 26
1.10. Summary 29

Chapter 2 **Properties of Thermodynamic Substances** **31**
2.1. Thermodynamic Substances 31
2.2. Pure Substances 31
2.3. Ideal gases 53
2.4. Real gases 63
2.5. Incompressible Substances 65
2.6. Summary 69

Chapter 3 **First Law of Thermodynamics for Closed Systems** **71**
3.1. Introduction 71
3.2. Work 71
3.3. Heat 78
3.4. First Law of Thermodynamics for a Closed System 80
3.5. First Law of Thermodynamics for a Closed System Apply to Cycles 84
3.6. Closed System for Various Processes 85
3.7. Multi- Process 104

	3.8.	Summary	108
Chapter 4	**First Law of Thermodynamics for Open Systems**		**109**
	4.1.	Introduction	109
	4.2.	Conservation of Mass	109
	4.3.	First Law of Thermodynamics	112
	4.4.	CyclePad Open System Devices	115
	4.5.	Other Devices (Unable toUse CyclePad)	151
	4.6.	Systems Consisting of More than One Open-System Device	153
	4.7.	Summary	157
Chapter 5	**Second Law of Thermodynamics**		**159**
	5.1.	Introduction	159
	5.2.	Definitions	159
	5.3.	Second Law Statements	169
	5.4.	Reversible and Irreversible Processes	170
	5.5.	Carnot Cycle	170
	5.6.	Carnot Corollaries	178
	5.7.	The Thermodynamic Temperature Scale	179
	5.8.	Summary	179
Chapter 6	**Entropy**		**181**
	6.1.	Clausius Inequality	181
	6.2.	Entropy and Heat	182
	6.3.	Heat and Work as Areas	185
	6.4.	Entropy and Carnot Cycles	185
	6.5.	Second Law of Thermodynamics for Closed Systems	187
	6.6.	Second Law of Thermodynamics for Open Systems	189
	6.7.	Property Relationships	190
	6.8.	Isentropic Processes	198
	6.9.	Isentropic Efficiency	201
	6.10.	Entropy Change of Irreversible Processes	212
	6.11.	The Increase of Entropy Principle	215
	6.12.	Second Law Efficiency and Effectiveness of Cycles	217
	6.13.	Available and Unavailable Energy	227
	6.14.	Summary	228
Chapter 7	**Exergy and Irreversibility**		**229**
	7.1.	Introduction	229
	7.2.	Reversible and Irreversible Work	229
	7.3.	Reversible Work of a Closed System	233
	7.4.	Reversible Work of an Open System	236
	7.5.	Reversible Work of an Open System in a Steady-State Flow Process	237
	7.6.	Irreversibility of a Closed System	240
	7.7.	Irreversibility of an Open System	242
	7.8.	Exergy (Availability)	246

	7.9.	Exergy of a Heat Reservoir	247
	7.10.	Exergy and Exergy Change of a Closed System	249
	7.11.	Exergy of a Flow Stream and Flow Exergy Change of an Open System	254
	7.12.	The Decrease of Exergy Principle	258
	7.13.	Exergy effectiveness of devices	261
	7.14.	Exergy Cycle Efficiency	263
	7.15.	Summary	268
Chapter 8	**Vapor Cycles**		**269**
	8.1.	Carnot Vapor Cycle	269
	8.2.	Basic Rankine Vapor Cycle	272
	8.3.	Improvements to Rankine Cycle	281
	8.4.	Actual Rankine Cycle	282
	8.5.	Reheat Rankine Cycle	289
	8.6.	Regenerative Rankine Cycle	295
	8.7.	Low-temperature Rankine Cycles	307
	8.8.	Solar Heat Engines	308
	8.9.	Geothermal Heat Engines	312
	8.10.	Ocean Thermal Energy Conversion	323
	8.11.	Solar Pond Heat Engines	329
	8.12.	Waste Heat Engines	331
	8.13.	Vapor Cycle Working Fluids	332
	8.14.	Kalina Cycle	333
	8.15.	Non-Azeotropic Mixture Rankine Cycle	334
	8.16.	Super-Critical Cycle	336
	8.17.	Design Examples	337
	8.18	Summary	350
Chapter 9	**Gas Closed System Cycles**		**351**
	9.1.	Otto Cycle	351
	9.2.	Wankel Engine	363
	9.2.	Diesel Cycle	364
	9.3.	Atkinson Cycle	377
	9.4.	Dual Cycle	379
	9.5.	Lenoir Cycle	384
	9.6.	Stirling Cycle	387
	9.7.	Miller Cycle	393
	9.8.	Wicks Cycle	398
	9.9.	Rallis Cycle	400
	9.10.	Design Examples	406
	9.11	Summary	420
Chapter 10	**Gas Open System Cycles**		**423**
	10.1.	Brayton or Joule Cycle	423
	10.2.	Split-Shaft Gas Turbine Cycle	433
	10.3.	Improvements to Brayton Cycle	436

	10.4.	Reheat and Inter-Cool Brayton Cycle	437
	10.5.	Regenerative Brayton Cycle	443
	10.6.	Bleed Air Brayton Cycle	446
	10.7.	Feher Cycle	454
	10.8.	Ericsson Cycle	457
	10.9.	Braysson Cycle	461
	10.10.	Steam Injection Gas Turbine Cycle	466
	10.11.	Field Cycle	467
	10.12.	Wicks Cycle	470
	10.13.	Ice Cycle	472
	10.14.	Design Examples	474
	10.15.	Summary	479
Chapter 11	**Combined Cycle and Co-Generation**		**481**
	11.1.	Combined Cycle	481
	11.2.	Triple Cycle in Series	489
	11.3.	Triple Cycle in Parallel	494
	11.4.	Cascaded Cycle	497
	11.5.	Brayton/Rankine Combined Cycle	499
	11.6.	Brayton/Brayton Combined Cycle	503
	11.7.	Rankine/Rankine Combined Cycle	508
	11.8.	Field Cycle	511
	11.9.	Co-Generation	514
	11.10.	Design Examples	523
	11.11.	Summary	528
Chapter 12	**Refrigeration and Heat Pump Cycles**		**529**
	12.1.	Carnot Refrigerator and Heat Pump	529
	12.2.	Basic Vapor Refrigeration Cycle	532
	12.3.	Actual Vapor Refrigeration Cycle	537
	12.4.	Basic Vapor Heat Pump Cycle	540
	12.5.	Actual Vapor Heat Pump Cycle	544
	12.6.	Working Fluids for Vapor Refrigeration and Heat Pump Systems	546
	12.7.	Cascade and Multi-Staged Vapor Refrigerators	547
	12.8.	Domestic Refrigerator-Freezer System, and Air Conditioning-Heat Pump System	555
	12.9.	Absorption Air-Conditioning	560
	12.10.	Brayton Gas Refrigeration Cycle	561
	12.11.	Stirling Refrigeration Cycle	567
	12.12.	Ericsson Cycle	570
	12.13.	Liquefaction of Gases	572
	12.14.	Non-Azeotropic Mixture Refrigeration Cycle	573
	12.15.	Design Examples	575
	12.16.	Summary	584
Chapter 13	**Finite-Time Thermodynamics**		**585**

13.1. Introduction 585
13.2. Rate of Heat Transfer 586
13.3. Heat Exchanger 588
13.4. Curzon and Ahlborn (Endoreversible Carnot) Cycle 594
13.5. Curzon and Ahlborn Cycle with Finite Heat Capacity Heat Source and Sink 603
13.6. Finite Time Rankine Cycle with Infinitely Large Heat Reservoirs 608
13.7. Actual Rankine Cycle with Infinitely Large Heat Reservoirs 612
13.8. Ideal Rankine Cycle with Finite Capacity Heat Reservoirs 614
13.9. Actual Rankine Cycle with Finite Capacity Heat Reservoirs 625
13.10. Finite Time Brayton Cycle 632
13.11. Actual Brayton Finite Time Cycle 640
13.12. Other Finite Time Cycles 644
13.13. Summary 649

References **651**

Index **653**

PREFACE

Due to the rapid advances in computer technology, intelligent computer software and multimedia have become essential parts of engineering education. Software integration with various media such as graphics, sound, video and animation is providing efficient tools for teaching and learning. A modern textbook should contain both the basic theory and principles, along with an updated pedagogy.

Often traditional engineering thermodynamics courses are devoted only to analysis, with the expectation that students will be introduced later to relevant design considerations and concepts. Cycle analysis is logically and traditionally the focus of applied thermodynamics. Type and quantity are constrained, however, by the computational efforts required. The ability for students to approach realistic complexity is limited. Even analyses based upon grossly simplified cycle models can be computationally taxing, with limited educational benefits. Computerized look-up tables reduce computational labor somewhat, but modeling cycles with many interactive loops can lie well outside the limits of student and faculty time budgets.

The need for more design content in thermodynamics books is well documented by industry and educational oversight bodies such as ABET (Accreditation Board for Engineering and Technology). Today, thermodynamic systems and cycles are fertile ground for engineering design. For example, niches exist for innovative power generation systems due to deregulation, co-generation, unstable fuel costs and concern for global warming.

Professor Kenneth Forbus of the computer science and education department at Northwestern University has developed ideal intelligent computer software for thermodynamic students called CyclePad[*]. CyclePad is a cognitive engineering software. It creates a virtual laboratory where students can efficiently learn the concepts of thermodynamics, and allows systems to be analyzed and designed in a simulated, interactive computer aided design environment. The software guides students through a design process and is able to provide explanations for results and to coach students in improving designs. Like a professor or senior engineer, CyclePad knows the laws of thermodynamics and how to apply them. If the user makes an error in design, the program is able to remind the user of essential principles or design steps that may have been overlooked. If more help is needed, the program can provide a documented, case study that recounts how engineers have resolved similar problems in real life situations. CyclePad eliminates the tedium of learning to apply thermodynamics, and relates what the user sees on the computer screen to the design of actual systems.

This integrated, engineering textbook is the result of fourteen semesters of CyclePad usage and evaluation of a course designed to exploit the power of the software, and to chart a path that truly integrates the computer with education. The primary aim is to give students a thorough grounding in both the theory and practice of thermodynamics. The coverage is compact without sacrificing necessary theoretical rigor. Emphasis throughout is on the

---

[*] CyclePad is freely distributed to the public. In just a few steps, anyone with access to a web browser can download the latest edition over the web. The necessary URL is: *www.qrg.ils.northwestern.edu*. Computer literate users with an exposure to thermodynamics will require little or no help in order to effectively use the software.

applications of the theory to actual processes and power cycles. This book will help educators in their effort to enhance education through the effective use of intelligent computer software and computer assisted course work.

The book is meant to serve as the text for two semester courses of three credits each. It meets the needs of undergraduate degree courses in mechanical, aeronautical, electrical, chemical, environmental, industrial, and energy engineering, as well as in engineering science and courses in combined studies in which thermodynamics and related topics are an important part of the curriculum. Students of engineering technology and industrial engineers will also find portions of the book useful.

Classical thermodynamics is based upon the concept of "equilibrium". This means that time as an independent variable does not appear in conventional engineering thermodynamics textbooks. Heat transfer texts deal with the rate of energy transfer, but do not cover cycles. In this text, a chapter on "Finite-time thermodynamics" bridges the gap between thermodynamics and heat transfer.

Attitudinal benefits were noted by Professor Wu while teaching CyclePad assisted thermodynamics, both at the U.S. Naval Academy and Johns Hopkins University. Today's students tend to have a positive attitude toward computer assisted learning, quite a few describing the hands-on, interactive learning as "fun". Material that is presented with a modern pedagogy is positively regarded, and tends to be better understood and retained. Further, an ability to execute realistically complicated cycle simulations builds confidence and a sense of professionalism.

Both CyclePad and this text contain pedagogical aids. The intelligent computer software switches to a warning-tutoring mode when users attempt to impose erroneous assumptions or perform inappropriate operations during cycle analyses. Chapter summaries review the more salient textbook points and provide cohesion. Homework problems and worked examples appear liberally throughout the text which reinforce the theory. Both SI and English units systems are used in the book.

I wish to acknowledge the following individuals who encouraged me and assisted in the text preparation: Dr. Susan Chipman of the Naval Office of Research, Professor Ken Forbus of Northwestern University, Dr. Vincent Aleven and Dr. Carolyn Rose of Carneige-Millon University, and Professor Al Adams, CMDR. Matt Carr, Assistant Professor Jim Cowart, and Mr. Mike Spinks of the U. S. Naval Academy.

ACKNOWLEDGEMENTS

I wish to acknowledge the following individuals who assisted in the text preparation: Dr. Susan Chipman of Naval Office of Research, Professor Ken Forbus of Northwestern University, Professor Al Adams of the U S Naval Academy.

Chapter 1

BASIC CONCEPTS

1.1. THERMODYNAMICS

The field of science dealing with the relationships of heat, work, and properties of systems is called *thermodynamics*. A macroscopic approach to the study of thermodynamics is called *classical thermodynamics*. In engineering fields, a substance is considered to be in continuum, that is, it is continuously distributed throughout. The facts that matter is made up of molecules and that the molecules have motions are completely ignored. When a system is subjected to transfer of energy or other thermodynamic processes, attention is focused on the behavior of the system as a whole. This approach is mathematically rather simple, and allows engineers to easily describe a system using only a few properties. Engineering thermodynamics is based on this macroscopic point of view. If the *continuum* assumption is not valid, a statistical method based on microscopic molecular activity may be used to describe a system. The microscopic approach inquires into the motion of molecules, assumes certain mathematical models for the molecular behavior, and draws conclusions regarding the behavior of a system. Such a microscopic approach to the study of thermodynamics is called *statistical thermodynamics*. The microscopic approach is mathematically complex. Fortunately, the microscopic aspects are not essential in most of the important technical applications. We can obtain excellent engineering solutions using the simpler macroscopic ideas. Therefore, we shall use the macroscopic approach in this text.

Thermodynamics is studied by physicists, chemists, and engineers. Physicists and chemists are concerned with basic laws, properties of substances, and changes in the properties caused by the interaction of different forms of energy. Engineers are interested not only in all these aspects, but also in the application of thermodynamic principles to the design of machines that will convert energy from one form into another. Mechanical engineers are frequently concerned with the design of a system that will most efficiently convert thermal energy into mechanical energy, or vice versa.

Most engineering activity involves interactions of energy, entropy, exergy, heat, work, and matter. Thermodynamics likewise covers broad and diverse fields. Basic to the study of thermodynamics are definitions and concepts, properties of substances and changes thereof to energy transfer processes, the principles of thermodynamic laws. Practical uses of thermodynamics are unlimited. Traditionally, the study of applied thermodynamics is

emphasized in the analysis or design of large scale systems such as heat engines, refrigerators, air conditioners, and heat pumps.

Homework 1.1. Thermodynamics

1. What is thermodynamics?
2. Distinguish clearly between statistical (microscopic) and classical engineering (macroscopic) thermodynamics.

1.2. BASIC LAWS

Thermodynamics studies the transformation of energy from one form to another and the interaction of energy with matter. It is a protracted and deductive science based on four strict laws. These laws bear the titles: “The Zeroth Law of Thermodynamics”, “The First Law of Thermodynamics”, “The Second Law of Thermodynamics”, and “The Third Law of Thermodynamics”. Laws are statements in agreement with all human experience and are always assumed to be true. Laws can not be proved; their validity rests upon the fact that neither the laws nor any of their consequences have ever been contradicted by experience. Thermodynamics is a science built and based on these four basic laws. Among the four basic laws, The First Law of Thermodynamics and The Second Law of Thermodynamics are the two most useful to applied thermodynamics.

Zeroth law: Two systems which are each in thermal equilibrium with a third system are in thermal equilibrium with each other.

First law: Energy can neither be created nor destroyed.

Second law: Heat cannot flow spontaneously from a cold body to a hot body.

Third law: The entropy of all pure substances in thermodynamic equilibrium approaches zero as the temperature of the substance approaches absolute zero.

Homework 1.2. Basic Laws

1. What is a law? Can laws be ever violated?
2. What are the basic laws of thermodynamics?
3. State the Zeroth law.
4. State the First law.
5. State the Second law.
6. State the Third law.
7. Why does a bicyclist pick up speed on a downhill road even when he is not pedaling? Does this violate the First law of thermodynamics?
8. A man claims that a cup of cold coffee on his table warmed up to 90EC by picking up energy from the surrounding air, which is at 20EC. Does this violate the Second law of thermodynamics?
9. Consider two bodies A and B. Body A contains 10,000 kJ of thermal energy at 37EC whereas Body B contains 10 kJ of thermal energy at 97EC. Now the bodies are

brought into contact with each other. Determine the direction of the heat transfer between the two bodies.

1.3. WHY STUDY THERMODYNAMICS?

Abundant and cheap energy has been a decisive element in the creation of modern world economics. Since the industrial Revolution, fossil fuel energy has increasingly replaced human labor in industry, supported a growing population, and led to a spectacular growth in the productivity and higher standard of living for human beings. This growth has been associated with the ever-increasing use of energy in heat engines, refrigerators, and heat pumps. The revolution began with coal, and has progressed through the use of petroleum, natural gas and uranium. Hydroelectric, solar, wind, tidal, and geothermal power have made only a small contribution on a world scale, although they are highly significant to certain countries with no indigenous resources of fossil fuel. Easily exploited reserves of both fossil fuel and uranium are limited, and many will approach exhaustion within a few generations.

Let us examine the severity of the energy crisis. Energy consumption rate (power, work per unit time Wdot) for the past years has been known as nearly constant growth rate. A constant percentage growth rate implies that increase in future energy consumption is proportional to the current energy consumption. An exponential relation can be easily derived.

$$Wdot=(Wdot)_o \exp(at) \tag{1.3.1}$$

Where $(Wdot)_o$ is the current power consumption, Wdot is the future power consumption at time t, a is the annual growth rate, and t is time, respectively.

The energy consumed for all time up to now, E_o, is the integration of power from t=-4 to t=0.

$$E_o=I(Wdot)_o \exp(at)\, dt=(Wdot)_o/a. \tag{1.3.2}$$

The energy would be consumed from now to a future time, E_t, is the integration of power from t=0 to t=t.

$$E_t=I(Wdot)_o \exp(at)\, dt=(Wdot)_o \exp(at)/a. \tag{1.3.2}$$

A doubling time, t_D, can be defined to be that the power consumption at t_D is double the current power consumption as

$$(Wdot)_D=2\,(Wdot)_o=(Wdot)_o\exp(at_D). \tag{1.3.3}$$

Therefore

$$t_D=\ln 2/a=0.693/a. \tag{1.3.4}$$

As one can see, even for seemingly reasonable growth rate, the doubling time period can be relative short. For a=5%/year, the doubling time period is about 14 years; and for a=7%/year, the doubling time period is about 10 years.

The doubling time is particularly significant when the consumption of a fuel is considered. For a constant annual growth rate, it can be shown that the total energy consumption in the next doubling time period, E_D, (integration of power from t=0 to $t=t_D$) is equal to the energy consumed for all time up to now. In other words, the same amount of energy consumed up to now [Eq.(1.3.2)] would be consumed in the next doubling time period.

$$E_D=I(Wdot)_o \exp(at)\, dt=(Wdot)_o/a. \qquad (1.3.5)$$

A finite amount of energy resource (E_T) will approach exhaustion at a final time t_f. The final time t_f is the time from now that the total energy reserve would be completely deleted. E_T is the integration of power from t=0 to $t=t_f$. t_f can be found by the following equation:

$$t_f=\{Ln[a(E_T)/ (Wdot)_o+1]\}/a. \qquad (1.3.6)$$

The oil energy crisis gives no indication of going away. Instead it shows every sign of increasing in severity and complexity in the years to come. There are two obvious consequences: first, ways have to be found of using our energy resources more efficiently; and secondly, in the long term other sources of energy must be developed.

It is the science of thermodynamics which enables us to deal quantitatively with the analysis of energy conversion devices which are used to convert various energy into useful work or heat. It is therefore an essential study for those hoping to improve the effectiveness with which we use our existing energy resources. Thermodynamics is likely to play a vital role in the solution of the long term energy problem too. Thermodynamics is an essential tool for evaluating the potential of new energy conversion ideas.

Homework 1.3. Why Study Thermodynamics?

1. Why do we need to study thermodynamics?
2. The historical energy consumption curve of a country is known to follow an exponential curve. Two consumption data points are known as $0.3x10^9$ W at 1940 and $3x10^9$ W at 1970. Find the annual energy consumption growth rate of the country.
   ANSWER: 0.07677 y.
3. The United States energy consumption data from 1940 to 1980 is known to be an exponential function. The consumption are $0.2x10^{12}$ W at 1940 and $1.5x10^{12}$ at 1980. Find the annual energy consumption growth rate of the United States from 1940 to 1980.
   ANSWER: 0.05037 y.
4. Suppose the power consumption curve is $Wdot_t=(Wdot_0)(t^2+1)$. Find the doubling time and energy to be consumed in the next doubling time.
   ANSWER: 1 y, $Wdot_0(1)$.

5. If coal is used to supply the entire energy demand for the world, and the annual growth rate is assumed to be 3%/y. How long will our coal reserve last? The total coal reserve is 7.1×10^{15} Wy and the current power consumption is 7.1×10^{12} W.
   ANSWER: 3.434 y.
6. The historical Texas rates of oil production [$(Wdot)_p$] and consumption [$(Wdot)_c$] are: $Wdot_p = 70 \times 10^6 \exp(0.02*t)$ t = 0 at 1960 and $Wdot_c = 10^6 \exp(0.04*t)$ in barrels/yr
   Find: (A) the total barrels need to be produced by Texas oil to meet the demand consumption from 1960 to 1980, (B) the total barrels produced by Texas from 1960 to 1980, and (C) the oil exported by Texas from 1960 to 1980.
   ANSWER: 55.64×10^6 Barrels, 5.221×10^9 Barrels, 5.216×10^9 Barrels.
7. "Tar Sands" refers to a sand impregnated with a very heavy oil. It has been estimated that the total oil existing in American tar sands is approximately 183.3×10^{18} Wy. The current rate of USA energy consumption rate is 2.4×10^{12} W and annual growth rate is 0.05/y. Assuming all energy productions are from U.S.A. tar sands, find:(A) how many years can the total tar sands reserve last? (B) how many years can the total tar sands reserve last if the annual growth rate is 0 %?
   ANSWER: 15.16 y, 76.38×10^6 y.

1.4. DIMENSIONS AND UNITS

A *dimension* is a character to any measurable quantity. For example, the distance between two points is the dimension called length. A *unit* is a quantitative measure of a dimension. For example, the unit used to measure the dimension of length is the meter. A number of unit systems have been developed over the years. The two most widely used systems are the *English* unit system and the *SI* (Standard International) unit system. The SI unit system is a simple and logical system based on a decimal relationship among the various units. The decimal feature of the SI system has made it well-suited for use by the engineering world, with the single major exception of the United States. The SI units are gradually being introduced in U. S. industries, and it is expected that a changeover from English units to SI units will be completed in the near future.

The basic dimensions of a system are those for which we decide to set up arbitrary scales of measure. In the thermodynamic dimensional system, the four basic dimensions we customarily employed are length, mass, time, and temperature. Those dimensions that are related to the basic dimensions through defining equations are called *secondary dimensions*. For example, velocity is related to the basic dimension as length per unit time; and acceleration is also related to the basic dimension as length per unit time per unit time. In engineering, all equations must be dimensionally homogeneous. That is, every term in an equation must have the same dimension.

Those units for which reproducible standards are maintained are called *basic units*. Units are accepted as the currencies of science and engineering. The four basic SI and English system units used in engineering thermodynamics are meter (m) and foot (ft) in length, kilogram (kg) and pound (lbm) in mass, second (s) in time, and degree of Kelvin (K) and Rankine (ER) in temperature. Not all units are independent of each other. Those units that are related to the basic units through defining equations are called *secondary units*. For example, the English unit of area, the acre, is related to the basic unit of length, the foot.

It is important to realize that the constants in physical laws do not just happen to be equal to 1. We note that

1 newton=(1 kilogram)(1 meter/second^2)
1 pascal=1 newton/ meter^2
1 bar=100000 pascal
1 joule= 1 newton (meter)
1 cal=4.187 kJ
1 watt=1 joule/second
1 Btu=778.2 ft(lb)=5.404 psia(ft^3)
1 kJ/kg=1000 N(m)/kg=1000 m^2/s^2
1 Btu/lbm=25040 ft^2/s^2

In engineering applications, the newton, pascal, joule, and watt often prove to be rather small. We frequently encounter several thousand newtons, several thousand joules, several thousand pascals, or several thousand watts. In such cases and particularly in the tables of properties we shall use kilo-newton (kN), kilo-pascal (kPa), kilo-joule (kJ), and kilo-watt (kW) as the additional units of force, pressure, energy, and pressure.

Units and conversion factors can give trouble if they are not used carefully in solving a problem. The conversion from one unit to another unit are known, from English units to SI units, or vice versa. The following magnitude relationships exist between the English units to SI units.

1 kg=2.205 lbm	or 1 lbm=0.4536 kg
1 m=3.281 ft	or 1 ft=0.3048 m
1 m^2=10.76 ft^2	or 1 ft^2=0.09290 m^2
1 m^3=35.32 ft^3	or 1 ft^3=0.02830 m^3
1 m^3/kg=16.02 ft^3/lbm	or 1 ft^3/lbm=0.06243 m^3/kg
1 K=1EC=1.8ER=1.8EF	or 1ER=1EF=0.5556EC=0.5556 K
1 kN=224.8 lbf	or 1 lbf=4.448 N
1 kPa=0.1450 psi	or 1 psi=6.895 kPa
1 kJ=0.9478 Btu	or 1 Btu=1.055 kJ
1 kJ/kg=0.430 Btu/lbm	or 1 Btu/lbm=2.326 kJ/kg
1 kW(h)=3412 Btu	or 1 Btu=0.0002931 kW(h)
1 kW=3412 Btu/h=1.341 hp	or 1 hp=0.7457 kW=2545 Btu/h
1 kJ/[kg(K)]=0.2389 Btu/[lbm(ER)]	or 1 Btu/[lbm(ER)]=4.187 kJ/[kg(K)]

1 ton of refrigeration=12000 Btu/h=200 Btu/min=211 kJ/min=3.517 kW

The conversion are built into the CyclePad software. One can change the unit system from one to the other by reviewing the following example.

Example 1.4.1.

Convert the following quantities from the SI unit system to the English unit system:

(A) Temperature (T) 460EC, (B)pressure (p) 1200 kPa, (C) specific volume (v) 2.4 m^3/kg, (D) specific internal energy (u) 1500 kJ/kg, (E) specific enthalpy (h) 1600 kJ/kg, (F) specific entropy (s) 6.2 kJ/[kg(K)], (G) mass flow rate (mdot) 2.3 kg/s, (H) volumetric flow rate (Vdot) 5.52 m^3/s, (I) rate of internal energy (Udot) 3450 kW, (J) rate of enthalpy (Hdot) 3680 kW, and (K) rate of entropy (Sdot) 14.26 kW/K.

To solve this problem by CyclePad, we take the following steps:

1. Build
   A. Take a source and a sink from the open-system inventory shop and connect them.
   B. Switch to analysis mode.
2. Analysis
   A. Input the given information: (a) 460EC, 1200 kPa., etc. (b) Edit, (c) Preference, (d) Unit, and (e) English unit.
3. Display results
   A. Display the results. The answers are: 860EF, 174 psia, 38.44 ft^3/lbm, 644.9 Btu/lbm, 687.9 Btu/lbm, 1.48 Btu/[lbm(ER)], 5.07 lbm/s, 194.9 ft^3/s, 4627 hp, 4935 hp, and 24.33 Btu/[s(ER)].

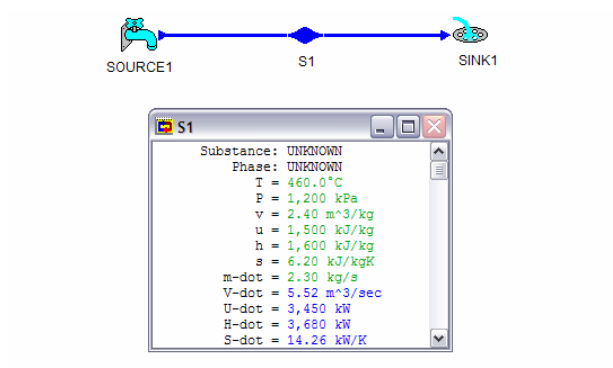

Figure E1.4.1a. Conversion (SI unit)

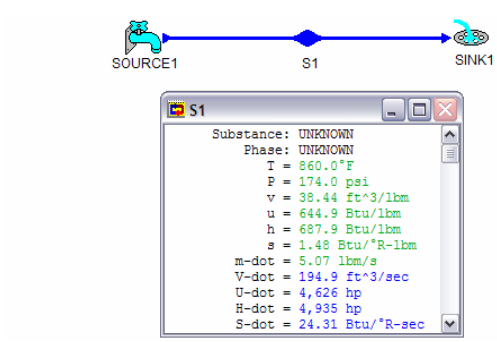

Figure E1.4.1b. Conversion (English unit)

Example 1.4.2.

Convert the following quantities from the English unit system to the SI unit system: (A) T 460EF, (B) p 120 psia,(C) v 2.4 ft^3/lbm, (D) u 1500 Btu/lbm, (E) h 1600 Btu/lbm, (F) s 6.2 Btu/[lbm(R)], (G) mdot 2.3 lbm/s, (H) Vdot 5.52 ft^3/s (I) Udot 4881 hp, (J) Hdot 5207 hp, and (K) Sdot 46.2 Btu/R(s).

To solve this problem by CyclePad, we take the following steps:

1. Build
   A. Take a source and a sink from the open-system inventory shop and connect them.
   B. Switch to analysis mode.
2. Analysis
   A. Input the given information: (a) 460EF, 120 psia, etc. (b) Edit, (c) Preference, (d) Unit, and (e) SI unit.
3. Display results
   A. Display the results. The answers are: 237.8EC, 827.4 kPa, 0.1498 m^3/kg, 3489 kJ/kg, 3722 kJ/kg, 25.96 kJ/[kg(K)], 1.04 kg/s, 0.1563 m^3/s, 3640 kW, 3883 kW, and 27.08 kW/K.

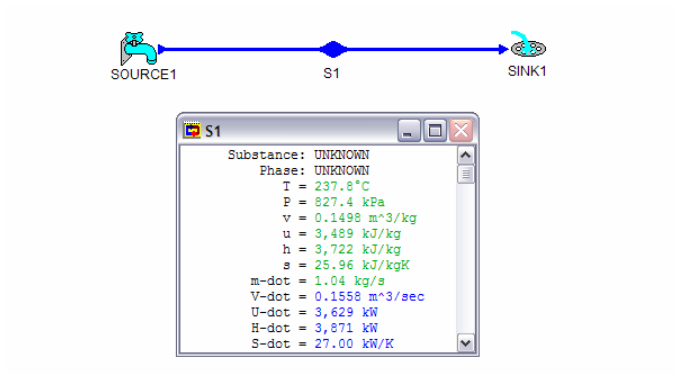

Figure E1.4.2a. Conversion from the English unit system to the SI unit system

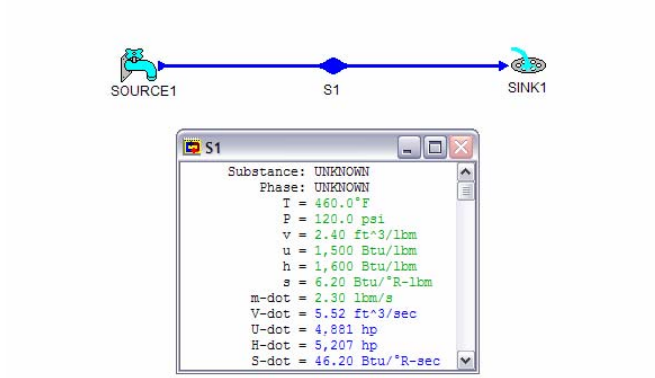

Figure E1.4.2b. Conversion from the English unit system to the SI unit system

Homework 1.4. Dimensions and Units

1. What is a dimension? What is a unit?
2. What is the difference between ft and s? What is the difference between lbm and lbf? What is the mass of a football player who weights 300 lbf on earth?
3. List the basic dimensions and state the units of each in the SI system.
4. What is the dimension of force in terms of the basic dimensions? What is the dimension of work in terms of the basic dimensions? What is the dimension of energy in terms of the basic dimensions? What is the dimension of heat in terms of the basic dimensions?
5. Express the following secondary dimensions in terms of basic dimensions:
   A. Volume
   B. Velocity
   C. Acceleration
   D. Force
   E. Pressure
   F. Energy
   G. Work
   H. Power
   I. Specific heat
6. Convert the following quantities from the SI unit system to the English unit system: 31EC, 205.0 kPa, 0.4253 m^3/kg, 218.0 kJ/kg, 2.23 kJ/[kg(K)], 0.75 kg/s, 0.3190 m^3/s, and 1.67 kW/K.
   ANSWER: 87.80EF, 29.73 psi, 6.81 ft^3/lbm, 93.72 Btu/lbm, 0.5328 Btu/[ER(lbm)], 1.65 lbm/s, 11.26 ft^3/s, 2.85 B/[ER(s)].
7. Convert the following quantities from the English unit system to the SI unit system: 129.0EF, 44 psi, 0.0162 ft^3/lbm, 96.96 Btu/lbm, 0.18 Btu/[ER(lbm)], 1.40 lbm/s, 0.0227 ft^3/s, 0.8164 B/[ER(s)], and 192.1 hp.
   ANSWER: 53.89EC, 303.4 kPa, 0.0010 m^3/kg, 225.5 kJ/kg, 0.7535 kJ/[kg(K)], 0.6350 kg/s, 0.0006439 m^3/s, 0.4785 kW/K, and 143.2 kW.

8. Convert the following quantities from the SI unit system to the English unit system: 600 K, 302.0 kPa, 0.5696 m^3/kg, 430.0 kJ/kg, 2.80 kJ/[kg(K)], 0.35 kg, 0.1994 m^3, 150.5 kJ, and 0.9804 kJ/K.
   ANSWER: 1080ER, 43.8 psi, 9.12 ft^3/lbm, 184.9 Btu/lbm, 0.6691 Btu/[ER(lbm)], 0.7716 lbm, 7.04 ft^3, 142.7 Btu, and 1.67 B/ER.
9. Convert the following quantities from the English unit system to the SI unit system: 3240ER, 87.02 psi, 13.78 ft^3/lbm, 554.7 Btu/lbm, 0.8854 Btu/[ER(lbm)], 428.0 Btu, and 2.21 B/ER.
   ANSWER: 1800 K, 600.0 kPa, 0.8601 m^3/kg, 1290.0 kJ/kg, 3.71 kJ/[kg(K)], 451.5 kJ, and 1.30 kJ/K.
10. Convert the following quantities from the SI unit system to the English unit system: 500EC, 10000 kPa, 0.0328 m^3/kg, 3046 kJ/kg, 6.6 kJ/[kg(K)], 0.0475 m^3/s, 4417 kW, and 9.57 kW/K.
    ANSWER: 932EF, 1450 psi, 0.5251 ft^3/lbm, 1310 Btu/lbm, 1.58 Btu/[ER(lbm)], 1.68 ft^3/s, 5923 hp, and 16.32 B/[ER(s)].
11. Convert the following quantities from the English unit system to the SI unit system: 131EF, 7.25 psi, 0.0162 ft^3/lbm, 98.98 Btu/lbm, 0.1834 Btu/[ER(lbm)], 0.0519 ft^3/s, 447.7 hp, and 1.9 B/[ER(s)].
    ANSWER: 55EC, 50.0 kPa, 0.001 m^3/kg, 230.2 kJ/kg, 0.7679 kJ/[kg(K)], 0.0015 m^3/s, 333.8 kW, and 1.11 kW/K.
12. Convert the following quantities from the SI unit system to the English unit system: 55.39EC, 10000 kPa, 0.001 m^3/kg, 230.3 kJ/kg, 0.7679 kJ/[kg(K)], 1.45 kg/s, 0.0015 m^3/s, 333.9 kW, and 1.11 kW/K.
    ANSWER: 131.7EF, 1450 psi, 0.0162 ft^3/lbm, 98.99 Btu/lbm, 0.1834 Btu/[ER(lbm)], 3.2 lbm/s, 0.0517 ft^3/s, 447.7 hp, and 1.90 B/[ER(s)].
13. Convert the following quantities from the English unit system to the SI unit system: 178.4EF, 7.25 psi, 43.96 ft^3/lbm, 926.5 Btu/lbm, 1.58 Btu/[ER(lbm)], 140.5 ft^3/s, 4191 hp, and 16.32 B/[ER(s)].
    ANSWER: 81.34EC, 50.0 kPa, 2.74 m^3/kg, 2155 kJ/kg, 6.60 kJ/[kg(K)], 3.98 m^3/s, 3125 kW, and 9.57 kW/K.
14. Convert the following quantities from the SI unit system to the English unit system: 645.2EC, 5720 kPa, 0.0459 m^3/kg, 656.3 kJ/kg, 2.38 kJ/[kg(K)], 0.0413 m^3, 590.6 kJ, and 2.14 kJ/K.
    ANSWER: 1188EF, 829.6 psi, 0.7351 ft^3/lbm, 282.1 Btu/lbm, 0.5690 Btu/[ER(lbm)], 1.46 ft^3, 559.8 Btu, and 3.66 B/ER.
15. Convert the following quantities from the English unit system to the SI unit system: 2157EF, 73.16 psi, 13.23 ft^3/lbm, 447.9 Btu/lbm, 0.8460 Btu/[ER(lbm)], 26.25 ft^3, 888.6 Btu, and 5.44 B/[ER(s)].
    ANSWER: 1180EC, 504.4 kPa, 0.8261 m^3/kg, 1042 kJ/kg, 3.54 kJ/[kg(K)], 0.7435 m^3, 937.6 kJ, and 3.19 kJ/K.
16. Convert the following quantities from the SI unit system to the English unit system: 15EC, 100 kPa, 0.8261 m^3/kg, 206.5 kJ/kg, 2.38 kJ/[kg(K)], 0.9 kg, 0.7435 m^3, 185.9 kJ, and 2.14 kJ/K.

ANSWER: 59EF, 14.5 psi, 13.23 ft^3/lbm, 88.79 Btu/lbm, 0.5690 Btu/[ER(lbm)], 1.98 lbm, 26.25 ft^3, 176.2 Btu, and 3.66 B/ER.

17. Convert the following quantities from the English unit system to the SI unit system: 4776EF, 829.6 psi, 2.34 ft^3/lbm, 896.3 Btu/lbm, 0.8460 Btu/[ER(lbm)], 4.63 ft^3, 1778 Btu, and 5.44 B/[ER(s)].
    ANSWER: 2636EC, 5720 kPa, 0.1458 m^3/kg, 2085 kJ/kg, 3.54 kJ/[kg(K)], 0.1312 m^3, 1876 kJ, and 3.19 kJ/K.
18. If an equation is not dimensionally consistent, is it necessarily incorrect? Why?

1.5. SYSTEMS

A *system* may consist of a collection of matter or space chosen for study. For example, a metal bar or a section of pipe can be considered as a system. The surface, imaginary or real, enclosing the system is called the *boundary*. The boundary of a system can be real or imaginary, fix or removable. Everything outside the boundary which might affect the behavior of the system is called the *surroundings* of the system. Thermodynamics is concerned with the interactions of a system and its surroundings or one system interacting with another in both energy and mass. If a system does not interact with its surroundings in mass, it is called a clos*ed* system. If a system does not interact with its surroundings in heat, it is called an *adiabatic* system. If a system does not interact with its surroundings in both energy and mass, it is called an *isolated* system.

In many cases, a thermodynamic analysis is simplified if attention is focused on a mass without substance flow. Such a mass is called a *control mass* or a *closed system*. Water in a rigid tank and gas in a piston-cylinder apparatus are examples of control masses.

On the other hand, attention can be focused on a volume in space into which, and/or from which, a substance flows. Such a volume is called a *control volume* or *open system*. A turbine, a compressor, a boiler, a condenser, and a pump involves fluid mass flow are examples of control volumes.

There are no rigid rules for the selection of control mass or control volume, but certainly the proper choice makes the analysis of a system much easier.

Homework 1.5. Systems

1. Explain the following concepts:
   A. System, boundary, and surroundings
   B. Closed system (control mass) and open system (control volume)
   C. Adiabatic and isolated system
2. In which of the following processes would it be more appropriate to consider a closed system rather than a control volume?
   (A) Steady flow discharge of steam from a nozzle
   (B) Freezing a given mass of water
   (C) Stirring of air contained in a rigid tank using a mechanical agitator
   (D) Expansion of air contained in a piston and cylinder device
   (E) Heating of a metal bar in a furnace

(F) Mixing of high pressure and low pressure air initially contained in two separate tanks connected by a pipe and valve

3. In which of the following processes would it be more appropriate to consider an open system rather than a closed system?
   A. Steady flow of steam through a turbine.
   B. Compression of air contained in a piston and cylinder device
   C. Two streams of water mixed in a mixing chamber to form a mixed stream of water
   D. Air flow through a nozzle
   E. Water flow through a pipe
   F. Air is heated in a combustion chamber to form a high temperature air-fuel mixture
4. Identify the system, surroundings, and boundary you would use to describe the following processes:
   A. Expansion of hot gas in the cylinder of an automobile engine
   B. Evaporation of water from an open pot
   C. Cooling of a steel rod
   D. Cooking of an egg
5. Must the boundary of a system be real? Can the boundary of a system be moveable?
6. Indicate whether the following statements are true or false:
   A. In a control volume at steady state, the mass changes.
   B. In a control volume at steady state, the pressure is uniform.
7. Is a fixed mass system usually treated as a closed or an open system?
8. Is a fixed space system usually treated as a closed or an open system?

1.6. PROPERTIES OF A SYSTEM

Once a system has been selected for analysis, it can be further described in terms of its properties. A *property* is a characteristic of a system and its value is independent of the history of the system. Some thermodynamic properties are directly or indirectly measurable, such as pressure, temperature, volume, specific heat at constant pressure, and specific heat at constant volume. Other properties called derived properties, such as enthalpy, can be defined by mathematically combining other properties. The value of a property is unique at a fixed state.

Properties are classified as either extensive or intensive. A property is *extensive* if its value for the whole system is the sum of its value for the various parts of the system. Examples of an extensive property include volume (V) and energy (E). Generally, upper case letters denote extensive properties, with a few exceptions, such as mass (m). Extensive properties per unit mass are called intensive or specific properties, such as specific volume (v=V/m). An *intensive* property has the same value independent of the size of a system, such as specific volume (v) and specific energy (e=E/m). Generally, lower case letters denote intensive properties, with a few exceptions, such as temperature (T).

1.6.1. Volume (V)

The *volume* is the physical space occupied by a body. The body itself can be in a solid, liquid, or gaseous state. The volume of a body is proportional to the mass of the body, and therefore volume is an extensive property. Volume can be easily measured. It is a macroscopic property associated with thermodynamic boundary work. Volume is therefore called displacement of thermodynamic boundary work. Volume is one of three basic measurable thermodynamic properties that are commonly used to describe a substance.

1.6.2. Density (Δ) and Specific Volume (v)

The *density* of a substance is the mass per unit volume. Density is defined by the equation

$$\Delta = \lim(\Delta m/\Delta V). \qquad (1.6.1.1)$$

where Δm is the finite mass contained in the finite volume ΔV.

In engineering thermodynamics, materials are considered to be in *continuum*. Therefore, ΔV cannot be allowed to shrink to zero. If ΔV became extremely small, Δm would vary discontinuously, depending on the number of molecules in ΔV. We must choose a ΔV sufficiently small but large enough to eliminate microscopic molecular effects. Under this condition the facts that the intermolecular distances are large compared to the molecular dimensions do not obscure our measurement of volume.

It is useful to define *specific volume* (v), volume per unit mass (m) of a substance.

$$v = V/m. \qquad (1.6.2.1)$$

Specific volume is the inverse of density. Specific volume and density are dependent. Specific volume is usually expressed in m^3/kg in the SI unit system and in ft^3/lbm in the English unit system. Both are affected by temperature and pressure.

For example, 2 kg of air contained in a 4 m^3 tank has a specific volume of 2 m^3/kg and a density of 0.5 kg/m^3.

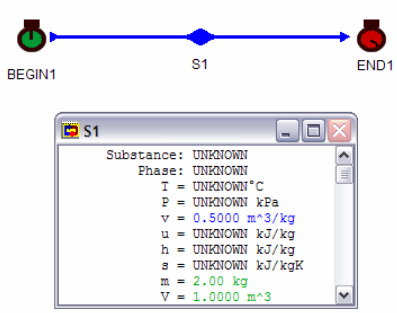

Figure E1.6.1. Determine the specific volume, specific weight and density

Example 1.6.1.

2 kg of a gas is contained in a 1 m^3 tank. Determine the specific volume of the gas.

To solve this problem by CyclePad, we take the following steps:

1. Build
   (A) Take a BEGIN and an END from the closed-system inventory shop and connect them.
   (B) Switch to analysis mode.
2. Analysis
   (A) Input the given information: mass is 2 kg and volume is 1 m^3.
3. Display results
   (A) Display the results. The answer is 0.5 m^3/kg.

1.6.3. Pressure (p)

The normal force exerted by a system on a unit area of its surroundings is called the *pressure* (p) of the system. Since the pressure of a substance does not depend on its mass, pressure is an intensive property. Pressure is a macroscopic property associated with thermodynamic boundary work. Pressure is therefore called the driving force of thermodynamic boundary work. Pressure is measurable and is one of the most important properties of a thermodynamic system.

Two different pressures are common in engineering practice: gage pressure and absolute pressure. The difference between gage and absolute pressure should be understood. *Absolute pressure* (p_{abs}) is the amount of force per unit area exerted by a system on its boundaries. *Gage pressure* (p_{gage}) is the value measured by a pressure gauge, which indicates the pressure difference between a system and its ambient, usually the atmosphere. The *atmospheric pressure* (p_{atm}) is due to the weight of the air per unit horizontal area in the earth's gravitational field. Hence,

$$p_{gage} = p_{abs} - p_{atm} \tag{1.6.3.1}$$

The units of pressure commonly used are inch or mm of mercury (Hg), kPa, Mpa, bar, psi, psf, etc. The most used thermodynamic unit of pressure in SI unit is kilo-pascal (kPa) or kilo-newton per square meter, and psi or pound force per square inch in English unit. Sometimes the unit bar is used for pressure. One bar equals 100 kPa.

The air around us can be treated as a homogeneous gas. The surface of the earth is covered by a layer of air, which we call the atmosphere. The pressure due to the weight of the atmospheric air is called atmospheric pressure. The standard atmospheric pressure at sea level is 29.92 in. Hg, 760 mmHg, 101.3 kPa, 0.1013 MPa, 1.013 bar, 14.69 psia, or 2117 psfa depending upon the units used. As we go up in elevation the atmospheric pressure decreases. Very often atmospheric pressure is assumed to be 101.3 kPa and 14.7 psia for simplicity. Barometers are used to measure atmospheric pressure, and usually use mercury as a manometer fluid. Common devices for measuring pressures are a Bourdon gage, shown in Figure 1.6.3.1, and a manometer, shown in Figure 1.6.3.2.

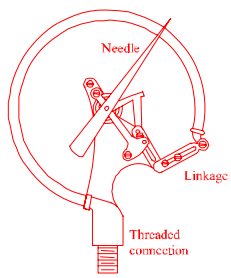

Figure 1.6.3.1 Bourdon gage

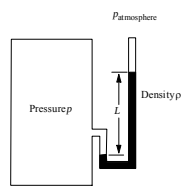

Figure 1.6.3.2. manometer

A *manometer* is used to measure the system pressure in a container. If the system has a pressure p, the fluid in the manometer has a density Δ, and the surroundings are atmospheric with pressure p_{atm}, then the difference in pressure between the system and the surroundings is able to support the fluid in the manometer for a deflection L. This may be expressed by

$$p - p_{atm} = \Delta L g \qquad (1.6.3.2)$$

where g is the gravitational acceleration.

Absolute pressures are always positive, while gauge pressures can be either positive or negative. Negative gauge pressures indicate pressures below atmospheric pressure. Pressures below atmospheric pressure are called vacuum pressures.

In the text if a pressure is not explicitly stated as being either gauge or absolute pressure, the implication is that the value is an absolute pressure.

Figure 1.6.3.3 depicts the various pressures in graphical form.

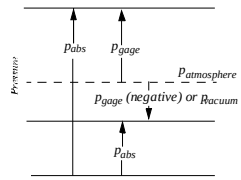

Figure 1.6.3.3. Graphical representation of pressure

It should be noted that when a system is subdivided, the pressure is not subdivided. This is a characteristic of an intensive property.

Example 1.6.3.1.

Steam is exhausted from a turbine at an absolute pressure of 2 psia. The barometer reads 14.7 psia. Determine the gage pressure and vacuum pressure in psig at the turbine exhaust.

Solution: Eq. (1.6.3.1) gives p_{gage}=2-14.7 psia=-12.7 psig, and p_{vacuum}=12.7 psi.

Example 1.6.3.2.

Convert 40 kPa gage pressure to absolute pressure. The barometer reads 101 kPa.

Solution: Eq. (1.6.3.1) gives p_{abs}=101+40 kPa Abs.=141 kPa Abs.

1.6.4. Temperature (T)

Temperature is often thought of as being a measure of the "hotness" of a substance. This statement is not exactly a good definition of temperature because the word hot is a relative rather than a quantitative term. Temperature is an indication of the thermal energy stored in a thermodynamic system. In thermodynamics, *temperature* is defined to be the property having equal magnitude in systems that are in thermal equilibrium. Temperature is a microscopic property associated with heat. Temperature is therefore called the driving force of heat. Temperature is measurable and is one of the most important properties of a thermodynamic system.

The *absolute temperature* scale is defined such that a temperature of zero corresponds to a theoretical state of no molecular movement of the substance. Negative absolute temperature is impossible. In the English unit system and SI unit system, the absolute temperature scales are the Rankine (ER) scale and the Kelvin (K) scale, respectively.

The most common type of temperature measuring device is the thermometer. *Metric temperature* scales are made by arbitrarily selecting reference temperatures corresponding to reproducible state points (ice point and steam point). In the English unit system and SI unit system, the metric temperature scales are the Fahrenheit (EF) scale and the Celsius (EC) scale

respectively. Negative temperatures exist for the metric temperature scale. The selection of reference temperatures allows us to write the relationships:

EF = (9/5)EC +32

and

EC = (5/9)(EF-32)

For example, 50EF is 10EC and 40EC is 104EF.

The absolute temperature scale is related to the metric temperature scale by the relationships:

K = EC + 273E

and

R = EF + 460E

For example, 20EC is 293 K and 40EF is 500ER.

Figure 1.6.4.1 depicts the various temperatures in graphical form.

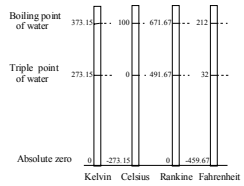

Figure 1.6.4.1. Graphical representation of temperature

Example 1.6.4.1.

Convert 560EF to degree of Rankine, degree of Kelvin, and degree of Centigrade.

To solve this problem by CyclePad, we take the following steps:

1. Build
   (A) Take a source and a sink from the open-system inventory shop and connect them.
   (B) Switch to analysis mode.

2. Analysis
   (A) Input the given information: (a) 560EF (b) edit, (c) preference, (d) unit, (e) change unit, and (f) SI.
3. Display results
   (A) Display the results. The answers are 1020ER, 293.3EC, 566.5 K.

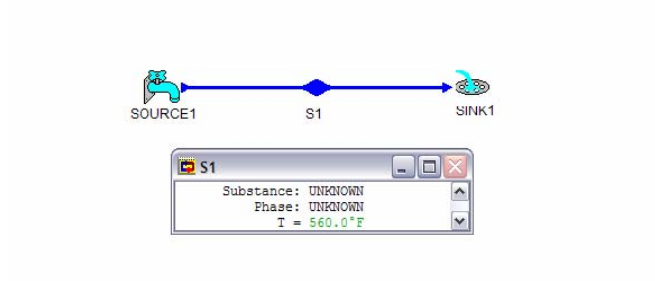

Figure E1.6.4.1a. Temperature conversion

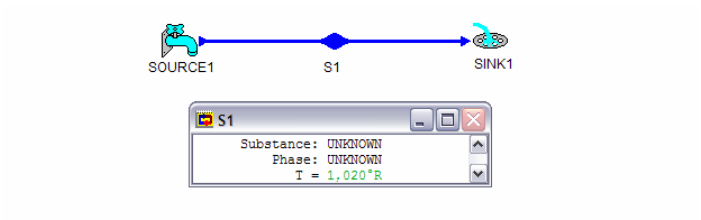

Figure E1.6.4.1b. Temperature conversion

1.6.5. Energy (E)

Matter can store *energy*. Energy held within a system is associated with the matter of the system. The amount of energy of a system is reflected in properties such as temperature, velocity, or position in a gravitational field. As the amount of stored energy changes, the value of these properties change. An important characteristic of classical thermodynamics is that it deals with the changes in the amount of energy in a system and not with the system's absolute energy.

A system stores energy within and between its constituent molecules. Microscopic energy modes include molecular translation energy, molecular rotation energy, molecular vibration energy, molecular binding energy, electron translation energy, electron spin energy, etc. This deeply stored total energy, which is associated with all microscopic modes, is called *internal energy*. The symbol U is used to represent internal energy, and u is used to represent specific internal energy. Any change in molecular velocity, vibration rate in the bonds and forces between molecules, or in the number and kind of molecules, changes the internal energy. The

change in internal energy is denoted by)U. The internal energy is not directly measurable, however, it is related to other measurable properties.

Kinetic energy (E_k) is the stored macroscopic energy that a body of mass m has when it possesses a velocity ***V***. The change in kinetic energy of a system when its velocity changes from $\boldsymbol{V}_1$ to $\boldsymbol{V}_2$ is $)E_k = m(\boldsymbol{V}_2^2-\boldsymbol{V}_1^2)/2$. The change in specific kinetic energy of a system when its velocity changes from $\boldsymbol{V}_1$ to $\boldsymbol{V}_2$ is $)e_k = (\boldsymbol{V}_2^2-\boldsymbol{V}_1^2)/2$.

Potential energy (E_p) is the stored macroscopic energy that a body of mass m has by virtue of its elevation (z) above ground level in a gravitation field whose acceleration is constant and equals to g. The potential energy is E_p=mgz. The change of potential energy from level z_1 to z_2 is $)E_p = mg(z_2-z_1)$. The change of specific potential energy from level z_1 to z_2 is $)e_p = g(z_2-z_1)$.

Flow energy (∗pV) is the energy required to push a volume V of a flowing substance through a boundary surface inlet section into the system from the surroundings by a pressure p, or to push a volume V of a flowing substance through a boundary surface exit section out from the system to the surroundings by a pressure p. Flow energy occurs only when there is a mass flow into the system or out from the system. If there is no mass flow into the system or out from the system, there is no flow energy. That is ∗=1 for an open system, and ∗=0 for a closed system.

The energy (E) of the system is the summation of internal energy, kinetic energy, potential energy, and flow energy as

$$E= U + E_k + E_p + *pV \tag{1.6.5.1}$$

1.6.6. Enthalpy (H)

Enthalpy is not a directly measurable property. It is a synthetic combination of the internal energy (U) and the flow energy (pV) exchanged with the surroundings. Enthalpy and specific enthalpy are symbolized by H and h, and are defined by

$$H = U + pV \tag{1.6.6.1}$$

$$h = u + pv \tag{1.6.6.2}$$

1.6.7. Specific Heat (c, c_p and c_v)

The quantity c = ∗q/dT is called the *specific heat* or *heat capacity*. It is a measure of the heat added to a mass of a system to produce a unit increase in temperature. For example, the specific heat of water at 25EC and 101.3 kPa is 4.18 kJ/[kg(K)], which means 4.18 kJ of heat added is required to a kg mass of water in order to raise its temperature by 1 K. The most commonly used specific heats are *specific heat at constant pressure* (c_p) and *specific heat at constant volume* (c_v); c_p and c_v are defined in the following equations:

$$c_p = (Mh/MT)_P \tag{1.6.7.1}$$

$$c_v = (Mu/MT)_v \quad (1.6.7.2)$$

The specific heat of a substance at constant pressure is the rate of change of specific enthalpy of the substance with respect to a change in the temperature of the substance while maintaining a constant pressure. The specific heat of a substance at constant volume is the rate of change of specific internal energy of the substance with respect to a change in the temperature of the substance while maintaining a constant volume. Both c_p and c_v are measurable properties and are measured on a constant pressure process and a constant volume process for a closed system, respectively. Values of c_p and c_v can be obtained by measuring the heat transfer required to raise the temperature of a unit mass of substance by one degree, while holding the pressure and volume constant, respectively. The unit of c (c_p or c_v) is kJ/[kg(K)] in SI system and Btu/[lbm(ER)] in English system.

The heat capacities of gases other than c_p and c_v for an arbitrary process can also be defined (*Reference: Chen and Wu,* The heat capacities of gases in arbitrary process, *The International Journal of Mechanical Engineering Education*, **29**(3), 227-232, 2001). Since c_p and c_v are measurable properties, we therefore have a method of calculating the internal energy and enthalpy for any process if we know the end states.

1.6.8. Ratio of the Specific Heats (k)

A dimension-less property denoted by k is the *ratio of the specific heats*, $k=c_p/c_v$. For air, the value of k is close to 1.4. It is extensively used in thermodynamics.

1.6.9. Quality, Dryness and Moisture Content

A liquid and vapor two-phase state is a mixture of liquid and vapor. *Quality* or *dryness* of vapor, usually represented by the symbol x, is defined as the vapor mass fraction of the total mixture. *Moisture content*, usually represented by (1-x), is defined as the liquid mass fraction of the total mixture. That is,

$$x = m_{vapor}/m_{total} \quad (1.6.9.1)$$

$$1-x = m_{liquid}/m_{total} \quad (1.6.9.2)$$

and

$$m_{total} = m_{vapor} + m_{liquid} \quad (1.6.9.3)$$

For example, 5 kg of saturated water liquid and vapor mixture consisting of 3 kg of saturated steam vapor and 2 kg of saturated liquid water has a quality of 0.6 and a moisture content of 0.4.

Example 1.6.9.1.

10 kg of water is contained in a tank. If 8 kg of the water is in vapor form and rest is in liquid form. Determine the quality and moisture content of the water.

Solution: Eq. (1.6.9.1) and Eq. (1.6.9.2) give

x=8/10=0.8

1-x=(10-8)/10=0.2

1.6.10. Entropy (S)

Entropy is a microscopic property associated with the microscopic energy transfer called heat (Q), between the system and its surroundings. Entropy is also called displacement of heat. It is not directly measurable, but can be related to other properties. Entropy is a measure of the level of irreversibility associated with any process. Unlike energy, it is non-conservative. It is a very important property in thermodynamics and will be discussed later in chapter 6.

1.6.11. Point Function

If the change of a function (quantity) of a system for a process between an initial state 1 and a final state 2 depends only on the two end states only, the function is said to be a *point function*. Otherwise, it is a path function. For example if T is a point function, then the change of T,)T, from state 1 to state 2 is

$$)T = IdT = T_2 - T_1 \qquad (1.6.11.1)$$

All properties are point functions.

Homewok 1.6. Properties

1. Explain the meaning of the following terms: property, intensive property, extensive property, specific property, total property.
2. Which of the following are properties of a system: pressure, temperature, density, energy, work, heat, volume, specific heat, and power?
3. List at least three measurable properties of a system.
4. Distinguish clearly between intensive and extensive properties? Give three examples of each type.
5. What is a specific property?
6. What is a continuum?
7. Is the property denoted by H an intensive or extensive property ? How about the property denoted by h?

8. How are volume and specific volume related? What are the notations used for volume and specific volume?
9. How are density and specific volume related? Are density and specific volume dependent or independent?
10. What property is the sum of internal energy and flow energy?
11. Does a system possesses flow energy without mass flow in or out of the system?
12. What is meant by flow energy?
13. Define the property c_p.
14. The specific heat for a substance is different for different processes. Thus we define c_p and c_v. Are c_p and c_v properties?
15. Are c_p and c_v measurable?
16. What is the importance of the fact that c_p and c_v are properties?
17. Define flow energy. Does a substance possesses flow energy when at rest?
18. Explain the difference between absolute pressure and gage pressure.
19. Can absolute pressure of a system be negative? Can gage pressure of a system be negative?
20. What is a vacuum pressure?
21. A pressure gage attached to a compressed gas tank reads 500 kPa at a site where the barometric reading is 100 kPa. What is the absolute pressure of gas in the tank?
22. A pressure gage attached to a gas tank reads 50 kPa vacuum at a site where the barometric reading is 100 kPa. What is the absolute pressure of gas in the tank?
23. A vacuum pressure gage connected to a pipeline indicates 0.1 bar at a site where the barometric reading is 1 bar. What is the absolute pressure in the pipeline?
24. All substances are subjected to pressure and have a specific volume. Hence they all have the product pv, do they all have flow energy?
25. What is the internal energy of a system?
26. Could a derived property such as h be an independent property?
27. Water in nature exists in three different phases. Which phase of water has the highest density? Which phase of water has the highest specific volume?
28. Specific volume of cotton is fairly high. Why is that?
29. Two pounds of air occupies a volume of 30 ft^3. Find the specific volume in ft^3/lbm and specific weight in lbf/ft^3.
    ANSWER: 15 ft^3/lbm, 2.147 lbf/ft^3.
30. Is pressure an extensive property?
31. Define the units psi and kPa.
32. What is the difference between gage pressure and atmosphere pressure?
33. A pressure gage at a turbine inlet reads 500 psi and a vacuum gage at the turbine exhaust reads 2 psi. The corresponding barometer reading is 14.7 psi. What are the turbine inlet and exhaust pressures in psia?
    ANSWER: 514.7 psia, 16.7 psia.
34. A vacuum gauge in a tank reads 10 psi vacuum. The barometer is 14.7 psi, what is the absolute pressure of the system in the tank?
    ANSWER: 4.7 psia.
35. The pressure of a system drops by 20 psi during an expansion process. Express this drop in psig and psia.

36. Standard atmospheric pressure at sea level is 14.7 psia. Convert it to kPa and bars using CyclePad.
    ANSWER: 101.4 kPa.
37. A vacuum gauge in a tank reads 10 psi vacuum. The barometer is 14.7 psi, what is the absolute pressure of the system in the tank?
    ANSWER: 4.7 psia.
38. The body temperature of a healthy person is 37EC. What is it in Kelvin, in Fahrenheit and in Rankine scale?
    ANSWER: 310.1 K, 98.6EF, 558.3ER.
39. At 40EF, what is the Celsius temperature? At what point are the two scales numerically equal?
    ANSWER: -40.
40. At 540ER, what is the Kelvin temperature? At what point are the two scales numerically difference is 200?
    ANSWER: 300 K, 450ER.
41. If $(T_2\text{-}T_1)$ is 40EF, what is $(T_2\text{-}T_1)$ in ER?
    ANSWER: 40ER.
42. Are the boiling pressure and boiling temperature of water dependent or independent?
43. Air temperature rises 400EC during a heating process. What is the air temperature rise in Kelvin during the heating process?
    ANSWER: 400 K.
44. Copper block A contains 1000 kJ of thermal energy at 50EC and copper block B contains 100 kJ of thermal energy at 500EC. The two blocks are brought into contact with each other. Is heat transfer flow from block A to block B, or from block B to block A?
45. What temperature does a thermometer measure in SI unit? What temperature does a thermometer measure in English unit?

1.7. EQUILIBRIUM STATE

A system is defined to be at *equilibrium* if it does not tend to undergo any further change of its own accord; any further change must be produced by external means.

Traditionally, classical thermodynamics has been able to deal with systems only when they were at rest, or at equilibrium. Therefore classical thermodynamics is also called equilibrium thermodynamics.

But thermodynamic systems are not always at equilibrium, and a method has been developed to apply it to non-equilibrium systems which conduct heat, matter, or work at a steady state. This relatively new field is called *FINITE-TIME THERMODYNAMICS* (*Reference: Recent advances in finite-time thermodynamics by Wu, Chen and Chen*, Nova Science Publishers, New York, 1999).

The *state* of a system is the condition of a system at any particular moment and can be identified by a statement of the properties of the system. A specification of a state describes a system completely. The number of independent intensive properties needed to define a state depends on the number of work modes of the substance. Work due to normal boundary

motion (compressible work), work due to tangential boundary motion, work due to boundary stretching, work due to magnetization and work due to polarization are five examples of work modes. The state of a substance can be completely specified by the number of work modes plus one independent, intensive properties.

Substances used in engineering thermodynamics are usually restricted to simple compressible substances, which have only one work mode called compressible work. The state of a simple compressible substance can therefore be completely specified by two independent, intensive properties.

For example, a state of superheated vapor H_2O can be defined by a pressure of 100 kPa and a temperature of 400EC, because both pressure and temperature are intensive properties and are independent in one-phase region. However, a state of saturated mixture H_2O can not be defined by a pressure of 14.7 psia and a temperature of 212EF, because pressure and temperature are dependent in the two-phase region.

Similarly, a state of air cannot be defined by a specific volume of 5 m^3/kg and a density of 0.2 kg/m^3. because specific volume and density are dependent.

Homework 1.7. Equilibrium State

1. Explain the concept of equilibrium.
2. Which of the following systems are not in equilibrium?
   (A) Compressed air in a tank
   (B) A mixture of ice and water at 32EF
   (C) A burning log
   (D) A copper rod with one end immersed in a beaker of boiling water and the other in an ice bath
   (E) Steam, water and ice in a closed vessel at 0.01EC
   (F) Gasoline and oxygen in a closed vessel
   (G) Ice cubes floating in water at 50EF
   (H) A copper rod immersed in a beaker of boiling water
3. What is state? What is a steady state?
4. Could a thermodynamic equilibrium state be changed?
5. What is the minimum number of independent specific properties needed to define a thermodynamic state?
6. Is a state defined by given the boiling pressure and boiling temperature of water?
7. Is the state of air in your classroom completely specified by the temperature and pressure? Why?
8. How many different values does a property possess at a fixed state?
9. Does a state change if just one of its many properties changed?

1.8. PROCESSES AND CYCLES

A series of infinitesimal changes in a system between an initial state and a final state is called a *process*, or path change of state. The method by which the path is described is called a process. Since the system is disturbed infinitesimally at each state of the process and the

resulting change in the process is infinitesimal. Under this condition, we do not have a genuine thermodynamic equilibrium , but we have something very close to it. We called such a state quasi-equilibrium, distinct from states of equilibrium or non equilibrium. Therefore the time required for the process is of no consideration in equilibrium thermodynamics.

A process can be described only in terms of the properties of the system or a functional relation between the properties. A property of a system depends only on the state of the system and not on how a state is arrived at. Thus, a change in property is independent of path.

A differential change in property such as temperature (T) is written as dT. The change of temperature for a process between an initial state 1 and a final state 2 is

$$T_2 - T_1 = IdT \tag{1.8.1}$$

When a process proceeds in a manner in which the system remains too infinitesimally close to an equilibrium state at all times, it is called a *quasi-equilibrium* process or an ideal process. An *ideal process* is not a true representation of an actual process, which occurs at a faster rate. However, ideal processes are easy to analyze. Therefore, an actual process can be modeled as an ideal process with negligible error.

Important thermodynamic processes include isothermal, isobaric, isochoric, adiabatic, isentropic, throttling, and polytropic processes.

The prefix iso- is often used to designate a process for which a particular property remains constant. An *isothermal process* is a constant temperature process during which the temperature (T) remains constant; an *isobaric process* is a constant pressure process during which the pressure (p) remains constant; and an *isochoric* process is a constant volume process during which the volume (V) remains constant. An *adiabatic* process is a process during which the system does not exchange heat (Q=0) with its surroundings . A *constant internal energy* process is a process during which the internal energy (U) remains constant. An *isentropic* process is a constant entropy process during which the entropy (S) remains constant. A t*hrottling* process is a constant enthalpy process during which the enthalpy (H) remains constant. A *polytropic* process is a constant pV^n process, where n is a constant.

A cyclic process, or *cycle*, is a process for which the end states are identical (initial state = final state). This implies that all properties of a system regained their initial values. The change in the value of any property of the system for a cycle is zero. The system is then in a position to be put through the same cycle of events again, and the procedure may be repeated indefinitely.

Homework 1.8. Processes and Cycles

1. What is a process?
2. Explain the concept of quasi-equilibrium
3. A system undergoes a process with an initial temperature of 700 K and a final temperature of 400 K, but the temperatures of the intermediate states are unknown. Can we determine the temperature difference between the final state and the initial state? If yes, what is the temperature difference in K and what is the temperature difference in EC?
   ANSWER: 300 K, 300 EC.

4. Water is heated in an open container. After some time, the water starts to boil. Which of the following correctly describes the entire process?
   (A) Isothermal process
   (B) Adiabatic process
   (C) Isobaric process
   (D) Isochoric process
5. Does an adiabatic process mean that the net heat transfer is zero, or that there is no transfer heat at all?
6. Which of the following processes, if any, would you assume to be adiabatic?
   (A) Water flows through a car radiator.
   (B) Water is pumped by a car water pump.
   (C) Air passes through a high speed turbine.
   (D) Air at high speed passes through a valve.
   (E) Air at high speed passes through a nozzle.
7. What is a cycle?
8. What are the quantity changes of properties for a complete cycle?
9. Does the total quantity change of heat must equal to zero for a complete cycle?
10. Does the total quantity change of work must equal to zero for a complete cycle?
11. Steam is expanded through a turbine. Is this a process or a cycle?
12. Air is compressed through a compressor. Is this a process or a cycle?

1.9. CYCLEPAD

Professor Kenneth Forbus of the computer science and education department at Northwestern University has developed ideal intelligent computer software for thermodynamic students called CyclePad*. CyclePad is a cognitive engineering software. It creates a virtual laboratory where students can efficiently learn the concepts of thermodynamics, and allows systems to be analyzed and designed in a simulated, interactive computer aided design environment. The software guides students through a design process and is able to provide explanations for results and to coach students in improving designs. Like a professor or senior engineer, CyclePad knows the laws of thermodynamics and how to apply them. If the user makes an error in design, the program is able to remind the user of essential principles or design steps that may have been overlooked. If more help is needed, the program can provide a documented, case study that recounts how engineers have resolved similar problems in real life situations. CyclePad eliminates the tedium of learning to apply thermodynamics, and relates what the user sees on the computer screen to the design of actual systems.

CyclePad allows the users to solve design problems in logical steps and to ask questions. It enables the users to perform simulation, parametric studies, and optimization on thermodynamic systems. It displays the thermodynamic systems, desired numerical results and the p-V, T-S and sensitivity diagrams in colorful graphical forms. It enables the users to analyze and design thermodynamic systems easily and quickly. It has an intelligent feature, quite different from other software. Misinformation and wrong doing in a CyclePad design thermodynamic system will be picked up and reasons why a contradiction may occurs

automatically by the intelligent software. The sophisticated powerful software does not open the door for abuses and misinformation by poorly trained users.

CyclePad has been in active use at the U.S. Naval Academy since 1996 by Professor Wu for several thermodynamics courses. It has been well received by students and has been observed to lead to students creating better designs. Whereas traditional engineering instruction of thermodynamics teaches students to analyze designs in response to specific questions, CyclePad was designed to help students learn by having them design and analyze thermodynamics within a simulator. By providing students with an environment in which they are able to apply their thermodynamics knowledge in a design context, CyclePad gives students the opportunity to develop skills that have been pinpointed as essential by the Accreditation Board for Engineering and Technology (ABET). Not only is design an important skill, but it is recognized as a difficult skill for students to acquire. The great success of CyclePad in teaching these skills is demonstrated by the fact that students have used CyclePad to produce designs of publishable quality.

CyclePad helps students gain a better qualitative understanding of thermodynamics since its simulation capabilities allow students to see how changing one parameter may affect the values of other parameters that are part of the same system. Without a simulator, it would simply be too much time consuming for students to do the necessary computations to allow them to see these relationships. Qualitative evaluations of CyclePad have shown that students who use CyclePad have a deeper understanding of thermodynamics equations and a better handle on the meaning of technical terms.

Using CyclePad, students build a simulated thermodynamic system by selecting and connecting components such as turbines, pumps, heat exchangers, etc. from CyclePad's inventory shops. Once the thermodynamic system is complete, CyclePad analyzes it. At the student's request, it provides explanations tracing forward from assumptions or backward from conclusions. It can do sensitivity analyses, showing how one parameter varies as you change another, without requiring students to spend an exorbitant amount of time on calculations. It has a number of help functions not normally found in simulators. Thus CyclePad makes it feasible for students to explore a much wide range of designs and assumptions that would be possible if the calculations would have to be done in the traditional way. Such explorations lead to greater understanding both of design trade-offs and of conceptual knowledge than would result from more traditional thermodynamics instruction, which tends to focus on analysis rather than design.

1.9.1. Download

CyclePad can be downloaded free from Northwestern University's web page at http://www.qrg.ils.northwestern.edu. CyclePad can be downloaded by the following steps:

Internet Explorer
Http://www.qrg.ils.northwestern.edu
Software
Dowload CyclePad v2.0
Fill in form - Submit form
License Agreement - Dowload Software

Save this program to disk - OK
Choose a location - Save
Close Internet Explorer
Open my computer
Go to the location you save the file to
Double click on webcpad - #######.exe
Double click on Setup.exe
Install
Yes
OK
OK - CyclePad is downloaded

1.9.2. Installation onto your own PC

CyclePad can be installed onto your own PC by the following steps:
Start up your computer normally
Insert the CyclePad first disk into your (3.5" or zip floppy disk) drive
Go to file manager and bring up the a:\ or e:\ drive window
You should see a file called **setup.exe**
Click on setup.exe and follow the on screen prompts
When you have successfully installed CyclePad, you should come to a screen that says
Congratulations! CyclePad has been installed successfully
You may now run CyclePad
Or,
Make new folder
Temp-CyclePad
Copy files from Zip to new folder Temp-CyclePad
Go to Temp-CyclePad
Double clip–webcpad- 20020504 20020504(date)
Double clip–cpadinst
Double clip–setup
Install
Yes
Yes
C:\CyclePad
OK
OK

1.9.3. Contents

An intelligent computer software called CyclePad has been evaluated by Prof. C. Wu in the Mechanical Engineering Department at the U.S. Naval Academy (USNA) with Oxford University and Northwestern University since 1995. The software has been incorporated in three thermodynamic courses at U S Naval Academy for fourteen semesters.

CyclePad is designed to help with the learning and conceptual design of thermodynamic cycles. It works in two phases, build mode and analyze mode.

1.9.4. Modes

1.9.4.1. Build

In the build mode, the user uses a graphical editor to place components out from a thermodynamic inventory shop and connects them to form a state or several states, a process or several processes, or a cycle or several cycles. While the user can always quit CyclePad at any time, you can only proceed to the next phase (analysis) when CyclePad is satisified that your design is fully laid out; that is, when every component is connected via some other components via states, and every state has been used as both an input and an output for components in the design.

1.9.4.2. Analysis

In the analyze mode, the user chooses a working fluid, processes on assumption for each component, and inputs numerical property values. As soon as you give CyclePad some information, it draws as many conclusions as it can about your design, based on everything you have told it so far. All the calculations are then quickly done by the software and displayed. The user is free to inquire about how values were derived and how one might proceed at any time, using a hypertext query system. At any time you can save your design to a file so that you can continue working on it later, and generate reports describing the state of your analysis of the design.

There is a sensitivity tool which makes cycle performance parameter effects easy and quick, and generates the effects in graph form. Such a sensitivity analysis is quite tedious to do by hand.

1.9.4.3. Contradiction

It is possible to make assumptions that conflict with each other. In such a case, CyclePad cannot continue to analyze the design until one or more of the conflicting assumptions has been retracted. When Cycle Pad detects a conflict, it enters contradiction mode. The contradiction resolution window appears on the screen to inform you that there is a contradiction. There is a coach (instructor) in the software. If there is a mistake or a contradiction made by the user, the coach will show up, display the contradiction, and suggest ways to solve the contradiction.

1.10. SUMMARY

In this chapter, the concepts and basic laws of thermodynamics are introduced. Engineering thermodynamics is a macroscopic science that deals with heat, work, properties, and their relationships. The first law of thermodynamics is the principle of energy conservation. The second law of thermodynamics indicates the direction of a process. English and SI unit systems are introduced. A system of fixed mass is called a closed system or control mass. A system of fixed volume with mass flow is called an open system or control

volume. The mass dependent properties of a system are called extensive properties and are usually denoted by upper class letters. The mass independent properties of a system are called intensive properties and are usually denoted by lower class letters. Specific volume, pressure and temperature are the three most important thermodynamic properties because they are directly measurable. Properties can be measurable or non-measurable. A state is a system at equilibrium. A process is a change of state. A cycle is a process with identical initial and final states. The state of a simple compressible substance is completely specified by two independent intensive properties. Relationships among the properties are called equations of state. An intelligent computer software called CyclePad is introduced. The procedures to download the software and install it into one's own PC are described.

Chapter 2

PROPERTIES OF THERMODYNAMIC SUBSTANCES

2.1. THERMODYNAMIC SUBSTANCES

In the analysis and design of thermodynamic processes, devices, and systems, we encounter many different types of thermodynamic *substances*. Among the many types, the three most important and frequently used types are pure substance, ideal gas, and incompressible substance.

A *pure substance* is a simple substance that has a homogeneous and invariable chemical composition and has only one relevant simple compressible work mode.

An *ideal gas* is mathematically defined as one whose thermodynamic equation of state is given by pv=RT, where p is the absolute pressure, v is the specific volume, R is the gas constant, and T is the absolute temperature of the gas, respectively.

An *incompressible substance* is a substance whose specific volume remains nearly constant during a thermodynamic process. Most liquids and solids can be assumed to be incompressible without much loss in accuracy.

Since system performance characteristics depend on the properties of the working substance used, it is essential that we have a good understanding of the thermodynamic behavior of a substance and know how to find properties of these substances.

Homework 2.1. Thermodynamic Substances

1. What are the three most important and frequently used types of thermodynamic substances?

2.2. PURE SUBSTANCES

A substance can exist in solid, liquid, or gas phase. At normal room pressure and temperature, copper is a solid, water is a liquid, and nitrogen is a gas; but each of these substances can appear in a different phase if the pressure or temperature is changed sufficiently.

A *phase* is any homogeneous part of a system that is physically distinct and is separated from other parts of the system by a definite bounding surface. Solid ice, liquid water, and water vapor constitute three separate phases of the substance H_2O.

A pure substance is a simple substance that has a homogeneous and invariable chemical composition and has only one relevant work mode. A pure substance is known as a pure compressible substance when the only relevant work mode is the compression work (pdV work) only. Water is a pure substance even if it exists as a mixture of liquid and vapor, or as a mixture of liquid, vapor, and solid, since its chemical composition is the same in all phases. Atmospheric air, which is essentially a mixture of nitrogen and oxygen, may be treated as a pure substance as long as it remains in the gaseous state. A mixture of gaseous air in equilibrium with liquid air is not a pure substance since the chemical composition in the gaseous state is not the same as that in the liquid phase. A mixture of oil and water is also not a pure substance since the chemical composition is not homogeneous throughout the system.

Primary thermodynamic practical interest is in situations involving the liquid, liquid-vapor, and vapor regions. Consider a pure substance, water (H_2O), contained in a piston-cylinder arrangement in Figure 2.2.1 be the system. The change of a subcooled H_2O liquid state to a superheated H_2O vapor state by constant-pressure heat addition process can be demonstrated by the following simple experiment. Figure 2.2.2 shows the process representation of the variation of v with T.

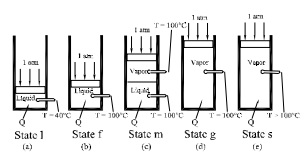

Figure 2.2.1. Liquid-vapor transition

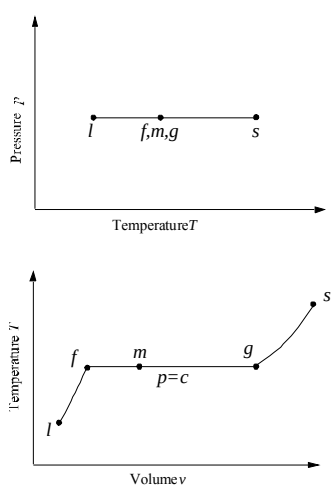

Figure 2.2.2. T-v diagram

Wu,

1. Heat is added at constant pressure of 101.3 kPa (corresponding boiling temperature at this pressure is 100EC) to the liquid water initially at 40EC (point l, Figure 2.2.1a). State l is in a region called the *sub-cooled* region because the state temperature is lower than the boiling temperature for this pressure at 101.3 kPa. The region is also called the *compressed-liquid* region because the state pressure is higher than the boiling pressure for this temperature at 40EC.
2. As heat is added, the water system temperature rises until it reaches 100EC (point f, Figure 2.2.1b), state f is called a *saturated liquid* and denoted by a subscript f, this means that it is at the highest temperature at which, for this pressure, it can remain liquid. The water starts to boil.
3. As more heat is added, the system temperature remains the same at 100EC during the boiling process. Some of the liquid changes to vapor, and a mixture of vapor and liquid occurs such as state m (point m, Figure 2.2.1c). This state is in a two phase region called *saturated mixture* region .
4. As more heat is added, the system temperature remains the same at 100EC and all the liquid in the mixture changes to vapor (point g, Figure 2.2.1d), state g is called a *saturated vapor* and denoted by a subscript g, this means that it is at the lowest temperature at which, for this pressure, it can remain vapor.
5. Any more heat addition to the system results in temperature rises over the boiling temperature (point s, Figure 2.2.1e), state s is called a superheated vapor. State s is in a region called *superheated vapor* region because the state temperature is higher than the boiling temperature for this pressure.

The processes from state l to state f, from state f to state m, from state m to state g, and from state g to state s are illustrated on p-T diagram and T-v diagram in Figure 2.2.2.

Repeat the same isobaric process test but at different pressures. Plot the results on a T-v diagram. Connect the locus of point f and the locus of point g. These two lines are called the saturated liquid line and the saturated vapor line, respectively. The two lines merge at a point c called the *critical point*. Point c has a unique temperature called critical temperature and a unique pressure called critical pressure. The T-v diagram for water at a pressure process with the saturation lines is shown in Figure 2.2.3. The T-v diagram for water at various pressures is shown in Figure 2.2.4.

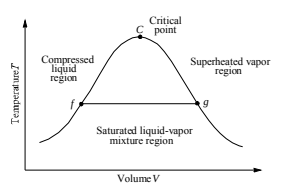

A T-v diagram illustrating three regions included in the steam tables.

Figure 2.2.3. T-v diagram

As illustrated in Figure 2.2.3, there are three regions called sub-cooled (or compressed) liquid region, saturated mixture region and superheated region separated by the two saturated

lines. At pressures higher than the critical pressure, the liquid could be heated from a low temperature to a high temperature without a phase transition occuring.

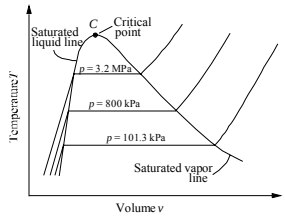

The T-*v* diagram for water at various pressures.

Figure 2.2.4. T-v diagram

Referring to Figure 2.2.3, it is possible to locate a state (point) of water by knowing the temperature and pressure if the state is in the sub-cooled liquid or superheated vapor region. However, it is not possible to locate a state (point) of water by knowing the temperature and pressure if the state is in the saturated mixture region. In the saturated mixture region, temperature and pressure are not independent. In order to define a state in the saturated mixture region, another property such as quality is required so that the fraction of the vapor in the mixture would be known. It is important to realize that at least two independent intensive properties are needed to determine the state of a pure substance.

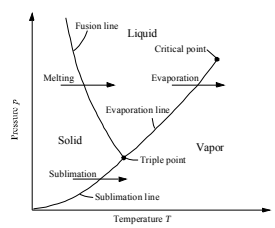

A *p-T* diagram showing phase equilbrium lines, the triple point, and the critical point.

Figure 2.2.5. Three phase p-T diagram

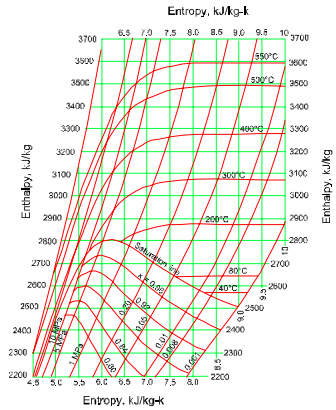

Figure 2.2.6. Mollier steam property diagram

Similar experiments can be done for solid-liquid transition and solid-vapor transition for a pure substance. The results are plotted on a p-T diagram, Figure 2.2.5. There are three two-phase lines called freezing (solid and liquid) line, boiling (vapor and liquid) line, and sublimation (solid and vapor) line on the diagram. There are three phase (solid, liquid and vapor) regions separated by the three lines. The three lines intersect at a point where all three phases can coexist. This point is called triple point.

The relationships among thermodynamic properties of the working substance at an equilibrium state are called equations of state. These equations in general are rather complicated and cumbersome to handle. It certainly would be convenient if tables or charts existed listing the values of the thermodynamic functions. Fortunately, tables and charts for many substances are available.

Thermodynamic data properties may be presented in the form of diagrams such as Mollier steam diagram (Figure 2.2.6). The Mollier diagram is a h-s diagram with constant pressure, constant temperature and constant quality lines. Notice that specific volume and internal energy values can not be read directly from the Mollier steam diagram.

Example 2.2.1.

3 kg of water is contained in a tank at (A) 0.1 Mpa and a quality of 0.9, and (B) 0.5 Mpa and 500EC. Determine the specific enthalpy and specific entropy of the water.

Solution: Mollier steam property diagram reading gives: (A) h=2450 kJ/kg and s=6.55 kJ/[kg(K)], and (B) h=3490 kJ/kg and s=8.3 kJ/[kg(K)].

However, the conventional way of presenting such data is in the form of saturation (saturated mixture) tables, superheated vapor tables, and compressed liquid tables. Typically, these tables give list values for p (pressure), T (temperature), v (specific volume), v_f (specific volume of saturated liquid), v_g (specific volume of saturated vapor), v_{fg} (difference between specific volume of saturated vapor and specific volume of saturated liquid, v_g-v_f), u (specific

internal energy), u_f (specific internal energy of saturated liquid), u_g (specific internal energy of saturated vapor), u_{fg} (difference between specific internal energy of saturated vapor and specific internal energy of saturated liquid, u_g-u_f), h (specific enthalpy), h_f (specific enthalpy of saturated liquid), h_g (specific enthalpy of saturated vapor), h_{fg} (difference between specific enthalpy of saturated vapor and specific enthalpy of saturated liquid, h_g-h_f), s (specific entropy), s_f (specific entropy of saturated liquid), s_g (specific entropy of saturated vapor), and s_{fg} (difference between specific entropy of saturated vapor and specific entropy of saturated liquid, s_g-s_f).

Notice that the compressed liquid table for refrigerants is usually not available. In the absence of compressed liquid table, the following approximate equations are used to calculate v, h and u at a state with given pressure and temperature in the compressed liquid region.

$$v=v_f \text{ at the state temperature} \tag{2.2.1}$$

$$u=u_f \text{ at the state temperature} \tag{2.2.2}$$

$$h=h_f \text{ at the state temperature}+v_f(p-p_f) \tag{2.2.3}$$

In the saturation mixture region, v, u, h and s are expressed in terms of the quality or called dryness (x) by the following equations:

$$v= (1-x)v_f + xv_g = v_f + xv_{fg} \tag{2.2.4}$$

$$u= (1-x)u_f + xu_g = u_f + xu_{fg} \tag{2.2.5}$$

$$h= (1-x)h_f + xh_g = h_f + xh_{fg} \tag{2.2.6}$$

and

$$s= (1-x)s_f + xs_g = s_f + xs_{fg} \tag{2.2.7}$$

The quality (dryness) of the mixture is only defined in the mixture region. This property does not apply to superheated vapor nor compressed liquid regions. It can be written as

$$x = (v-v_f)/v_{fg} \tag{2.2.8}$$

$$x = (u-u_f)/u_{fg} \tag{2.2.9}$$

$$x = (h-h_f)/h_{fg} \tag{2.2.10}$$

and

$$x = (s-s_f)/s_{fg} \tag{2.2.11}$$

Parts of the typical steam saturation tables (Table 2.2.1 and Table 2.2.2) and superheated vapor table (Table2.2.3) are given in the following tables. Notice that Table 2.2.1 and Table 2.2.2 are the same, except that Table2.2.1 is based on boiling temperature and Table 2.2.1 is

based on boiling pressure. Compressed or sub-cooled liquid water table is also available. However, the compressed or sub-cooled liquid water table is not very useful because it is large and can be replaced by a set of equations [Eq. (2.2.1), (2.2.2) and (2.2.3)].

Example 2.2.2.

8 kg of water is contained in a tank at 0.1 Mpa (1 Bar) and a quality of 0.9. Determine the temperature, specific volume, specific internal energy, specific enthalpy and specific entropy of the water.

Solution: Quality is only defined in the saturated mixture region. Steam saturation property table reading gives:

T=99.63EC, v_f=0.001043 m^3/kg, v_g=1.6940 m^3/kg, u_f=417.36 kJ/kg, u_{fg}=2088.7 kJ/kg, u_g=2506.1kJ/kg, h_f=417.46 kJ/kg, h_{fg}=2258.0 kJ/kg, s_f=1.3026 kJ/[kg(K)], s_{fg}=6.0568 kJ/[kg(K)], and s_g=7.3594 kJ/[kg(K)].

Eqs. (2.2.4), (2.2.5), (2.2.6), and (2.2.7) yields

$v=(1-x)\, v_f + xv_g = (0.1)0.001043+ (0.9)1.6940 =1.5247\ m^3/kg$

$u= u_f + xu_{fg} =417.36+(0.9)2088.7 =2297.2$ kJ/kg

$h= h_f + xh_{fg} =417.46+ (0.9)2258.0 =2449.7$ kJ/kg

and

$s= s_f + xs_{fg} =1.3026+ (0.9)6.0568 =6.7537$ kJ/[kg(K)]

Table 2.2.1. steam saturation table

Properties of water—saturation-temperature table (SI units)*

v in cm³/g, 1 cm³/g = 10^{-3} m³/kg; h and u in kJ/kg; s in kJ/kg·K; p in bars, 1 bar = 10^5Pa

		Specific volume		Internal energy		Enthalpy			Entropy	
Temp. °C T	Press. bars P	Sat. liquid v_f	Sat. vapor v_g	Sat. liquid u_f	Sat. vapor u_g	Sat. liquid h_f	Evap. h_{fg}	Sat. vapor h_g	Sat. liquid s_f	Sat vapor s_g
0	0.00611	1.0002	206278	−0.03	2375.4	−0.02	2501.4	2501.3	−0.0001	9.1565
5	0.00872	1.0001	147120	20.97	2382.3	20.98	2489.6	2510.6	0.0761	9.0257
10	0.01228	1.0004	106379	42.00	2389.2	42.01	2477.7	2519.8	0.1510	8.9008
15	0.01705	1.0009	77926	62.99	2396.1	62.99	2465.9	2528.9	0.2245	8.7814
20	0.02339	1.0018	57791	83.95	2402.9	83.96	2454.1	2538.1	0.2966	8.6672
25	0.03169	1.0029	43360	104.88	2409.8	104.89	2442.3	2547.2	0.3674	8.5580
30	0.04246	1.0043	32894	125.78	2416.6	125.79	2430.5	2556.3	0.4369	8.4533
35	0.05628	1.0060	25216	146.67	2423.4	146.68	2418.6	2565.3	0.5053	8.3531
40	0.07384	1.0078	19523	167.56	2430.1	167.57	2406.7	2574.3	0.5725	8.2570
45	0.09593	1.0099	15258	188.44	2436.8	188.45	2394.8	2583.2	0.6387	8.1648
50	0.1235	1.0121	12032	209.32	2443.5	209.33	2382.7	2592.1	0.7038	8.0763
55	0.1576	1.0146	9568	230.21	2450.1	230.23	2370.7	2600.9	0.7679	7.9913
60	0.1994	1.0172	7671	251.11	2456.6	251.13	2358.5	2609.6	0.8312	7.9096
65	0.2503	1.0199	6197	272.02	2463.1	272.06	2346.2	2618.3	0.8935	7.8310
70	0.3119	1.0228	5042	292.95	2469.6	292.98	2333.8	2626.8	0.9549	7.7553
75	0.3858	1.0259	4131	313.90	2475.9	313.93	2321.4	2635.3	1.0155	7.6824
80	0.4739	1.0291	3407	334.86	2482.2	334.91	2308.8	2643.7	1.0753	7.6122
85	0.5783	1.0325	2828	355.84	2488.4	355.90	2296.0	2651.9	1.1343	7.5445
90	0.7014	1.0360	2361	376.85	2494.5	376.92	2283.2	2660.1	1.1925	7.4791
95	0.8455	1.0397	1982	397.88	2500.6	397.96	2270.2	2668.1	1.2500	7.4159
100	1.014	1.0435	1673.	418.94	2506.5	419.04	2257.0	2676.1	1.3069	7.3549
110	1.433	1.0516	1210.	461.14	2518.1	461.30	2230.2	2691.5	1.4185	7.2387
120	1.985	1.0603	891.9	503.50	2529.3	503.71	2202.6	2706.3	1.5276	7.1296
130	2.701	1.0697	668.5	546.02	2539.9	546.31	2174.2	2720.5	1.6344	7.0269
140	3.613	1.0797	508.9	588.74	2550.0	589.13	2144.7	2733.9	1.7391	6.9299

Example 2.2.3.

8 kg of water is contained in a tank at 0.5 Mpa (5 Bar) and 320EC. Determine the temperature, specific volume, specific internal energy, specific enthalpy and specific entropy of the water.

Solution: If one is not sure where the state is, always check first at the saturation mixture region. At 0.5 Mpa, the corresponding boiling temperature is 81.33EC. Since the given state temperature (320EC) is higher than 81.33EC, the state is in the superheated vapor region. Steam superheated vapor property table reading gives: v =0.5416 m^3/kg, u =2834.7 kJ/kg, h =3105.6 kJ/kg, and s =7.5308 kJ/[kg(K)].

Table 2.2.2. steam saturation table

Properties of water – saturation-pressure table (SI units)*

v in cm^3/g, 1 $cm^3/g = 10^{-3}$ m^3/kg; h and u in kJ/kg; s in kJ/kg·K; p in bars, 1 bar = 10^5 Pa

		Specific volume		Internal energy		Enthalpy			Entropy	
Press. bars P	Temp. °C T	Sat. liquid v_f	Sat. vapor v_g	Sat. liquid u_f	Sat. vapor u_g	Sat. liquid h_f	Evap. h_{fg}	Sat. vapor h_g	Sat. liquid s_f	Sat. vapor s_g
0.040	28.96	1.0040	34800.	121.45	2415.2	121.46	2432.9	2554.4	0.4226	8.4746
0.060	36.16	1.0064	23729.	151.53	2425.0	151.53	2415.9	2567.4	0.5210	8.3304
0.080	41.51	1.0084	18103.	173.87	2432.2	173.88	2403.1	2577.0	0.5926	8.2287
0.10	45.81	1.0102	14674.	191.82	2437.9	191.83	2392.8	2584.7	0.6493	8.1502
0.20	60.06	1.0172	7649.	251.38	2456.7	251.40	2358.3	2609.7	0.8320	7.9085
0.30	69.10	1.0223	5229.	289.20	2468.4	289.23	2336.1	2625.3	0.9439	7.7686
0.40	75.87	1.0265	3993.	317.53	2477.0	317.58	2319.2	2636.8	1.0259	7.6700
0.50	81.33	1.0300	3240.	340.44	2483.9	340.49	2305.4	2645.9	1.0910	7.5939
0.60	85.94	1.0331	2732.	359.79	2489.6	359.86	2293.6	2653.5	1.1453	7.5320
0.70	89.95	1.0360	2365.	376.63	2494.5	376.70	2283.3	2660.0	1.1919	7.4797
0.80	93.50	1.0380	2087.	391.58	2498.8	391.66	2274.1	2665.8	1.2329	7.4346
0.90	96.71	1.0410	1869.	405.06	2502.6	405.15	2265.7	2670.9	1.2695	7.3949
1.00	99.63	1.0432	1694.	417.36	2506.1	417.46	2258.0	2675.5	1.3026	7.3594
1.50	111.4	1.0528	1159.	466.94	2519.7	467.11	2226.5	2693.6	1.4336	7.2233
2.00	120.2	1.0605	885.7	504.49	2529.5	504.70	2201.9	2706.7	1.5301	7.1271
2.50	127.4	1.0672	718.7	535.10	2537.2	535.37	2181.5	2716.9	1.6072	7.0527
3.00	133.6	1.0732	605.8	561.15	2543.6	561.47	2163.8	2725.3	1.6718	6.9919
3.50	138.9	1.0786	524.3	583.95	2548.9	584.33	2148.1	2732.4	1.7275	6.9405
4.00	143.6	1.0836	462.5	604.31	2553.6	604.74	2133.8	2738.6	1.7766	6.8959
4.50	147.9	1.0882	414.0	622.77	2557.6	623.25	2120.7	2743.9	1.8207	6.8565
5.00	151.9	1.0926	374.9	639.68	2561.2	640.23	2108.5	2748.7	1.8607	6.8213
6.00	158.9	1.1006	315.7	669.90	2567.4	670.56	2086.3	2756.8	1.9312	6.7600
7.00	165.0	1.1080	272.9	696.44	2572.5	697.22	2066.3	2763.5	1.9922	6.7080
8.00	170.4	1.1148	240.4	720.22	2576.8	721.11	2048.0	2769.1	2.0462	6.6628
9.00	175.4	1.1212	215.0	741.83	2580.5	742.83	2031.1	2773.9	2.0946	6.6226
10.0	179.9	1.1273	194.4	761.68	2583.6	762.81	2015.3	2778.1	2.1387	6.5863
15.0	198.3	1.1539	131.8	843.16	2594.5	844.89	1947.3	2792.2	2.3150	6.4448
20.0	212.4	1.1767	99.63	906.44	2600.3	908.79	1890.7	2799.5	2.4474	6.3409
25.0	224.0	1.1973	79.98	959.11	2603.1	962.11	1841.0	2803.1	2.5547	6.2575
30.0	233.9	1.2165	66.68	1004.8	2604.1	1008.4	1795.7	2804.2	2.6457	6.1869
35.0	242.6	1.2347	57.07	1045.4	2603.7	1049.8	1753.7	2803.4	2.7253	6.1253
40.0	250.4	1.2522	49.78	1082.3	2602.3	1087.3	1714.1	2801.4	2.7964	6.0701
45.0	257.5	1.2692	44.06	1116.2	2600.1	1121.9	1676.4	2798.3	2.8610	6.0199
50.0	264.0	1.2859	39.44	1147.8	2597.1	1154.2	1640.1	2794.3	2.9202	5.9734
60.0	275.6	1.3187	32.44	1205.4	2589.7	1213.4	1571.0	2784.3	3.0267	5.8892
70.0	285.9	1.3513	27.37	1257.6	2580.5	1267.0	1505.1	2772.1	3.1211	5.8133
80.0	295.1	1.3842	23.52	1305.6	2569.8	1316.6	1441.3	2758.0	3.2068	5.7432
90.0	303.4	1.4178	20.48	1350.5	2557.8	1363.3	1378.9	2742.1	3.2858	5.6772
100.	311.1	1.4524	18.03	1393.0	2544.4	1407.6	1317.1	2724.7	3.3596	5.6141
110.	318.2	1.4886	15.99	1433.7	2529.8	1450.1	1255.5	2705.6	3.4295	5.5527

Example 2.2.4.

8 kg of water is contained in a tank at 10 Mpa (100 Bar) and 120EC. Determine the temperature, specific volume, specific internal energy, specific enthalpy and specific entropy of the water.

Solution: If one is not sure where the state is, always check first at the saturation mixture region. At 120EC, the corresponding boiling pressure is 0.1985 Bar (1.985 Mpa). Since the given state pressure (10 Mpa) is higher than 1.985 Mpa, the state is in the compressed liquid region. Water compressed liquid property table is not needed. Using saturation table at 120EC, reading gives: v = 0.0010603 m^3/kg, u =503.5 kJ/kg, h =503.71 kJ/kg, and s =1.5276 kJ/[kg(K)].

Note: In case there is no compressed liquid property table available, one can use the saturated mixture property table to locate temperature at 120EC (the nearest value on Table

2.2.1 is 120.23EC). Then, Eqs. (2.2.1), (2.2.1) and (2.2.1) are used to find the approximate values of v, h and u at a state with given pressure and temperature in the compressed liquid region.

$v=v_f$ at the state temperature =0.001061 m^3/kg

$u=u_f$ at the state temperature =504.49 kJ/kg

$h=h_f$ at the state temperature =504.70 kJ/kg

Table 2.2.3. steam superheated vapor table
Properties of water – Superheated table (SI units)
v in cm^3/g, 1 cm^3/g=0.001 m^3/kg;; h and u in kJ/kg;
s in kJ/[(K)kg]; p in bars, 1 bar=10^2 kPa.

Properties of water – Superheated table (SI units)

v in cm^3/g, 1 cm^3/g=0.001 m^3/kg;; h and u in kJ/kg; s in kJ/[(K)kg]; p in bars, 1 bar=10^3 kPa.

Temp. °C	v	u	h	s	v	u	h	s
	500 kPa (151.86°C)				700 kPa (164.97°C)			
Sat.	374.9	2561.2	2748.7	6.8213	272.9	2572.5	2763.5	6.7080
180	404.5	2609.7	2812.0	6.9656	284.7	2599.8	2799.1	6.7880
200	424.9	2642.9	2855.4	7.0592	299.9	2634.8	2844.8	6.8865
240	464.6	2707.6	2939.9	7.2307	329.2	2701.8	2932.2	7.0641
280	503.4	2771.2	3022.9	7.3865	357.4	2766.9	3017.1	7.2233
320	541.6	2834.7	3105.6	7.5308	385.2	2831.3	3100.9	7.3697
360	579.6	2898.7	3188.4	7.6660	412.6	2895.8	3184.7	7.5063
400	617.3	2963.2	3271.9	7.7938	439.7	2960.9	3268.7	7.6350
440	654.8	3028.6	3356.0	7.9152	466.7	3026.6	3353.3	7.7571
500	710.9	3128.4	3483.9	8.0873	507.0	3126.8	3481.7	7.9299
600	804.1	3299.6	3701.7	8.3522	573.8	3298.5	3700.2	8.1956
700	896.9	3477.5	3925.9	8.5952	640.3	3476.6	3924.8	8.4391
	1.0 MPa (179.91°C)				1.5 MPa (198.32°C)			
Sat.	194.4	2583.6	2778.1	6.5865	131.8	2594.5	2792.2	6.4448
200	206.0	2621.9	2827.9	6.6940	132.5	2598.1	2796.8	6.4546
240	227.5	2692.9	2920.4	6.8817	148.3	2676.9	2899.3	6.6628
280	248.0	2760.2	3008.2	7.0465	162.7	2748.6	2992.7	6.8381
320	267.8	2826.1	3093.9	7.1962	176.5	2817.1	3081.9	6.9938
360	287.3	2891.6	3178.9	7.3349	189.9	2884.4	3169.2	7.1363
400	306.6	2957.3	3263.9	7.4651	203.0	2951.3	3255.8	7.2690
440	325.7	3023.6	3349.3	7.5883	216.0	3018.5	3342.5	7.3940
500	354.1	3124.4	3478.5	7.7622	235.2	3120.3	3473.1	7.5698
540	372.9	3192.6	3565.6	7.8720	247.8	3189.1	3560.9	7.6805
600	401.1	3296.8	3697.9	8.0290	266.8	3293.9	3694.0	7.8385
640	419.8	3367.4	3787.2	8.1290	279.3	3364.8	3783.8	7.9391

It should be pointed out that the values of u, h, and s in all tables are not absolute values. Each is the difference between the value at any state and the value of the respective property at a reference state. But it makes no difference, since we are only interested in changes of u, h and s.

Searching property values from the tables is tedious and long. The available software CyclePad saves users time and energy to spend on more creative activities. It is important for users to become familiar with the use of CyclePad.

There are nine thermodynamic working substances listed on the menu of CyclePad. Among the nine substances listed on the menu, ammonia, methane, refrigerant 12, refrigerant 22, refrigerant 134a, and water are pure substances. Among the most popular used pure working substances in thermodynamic application are refrigerants and water.

Example 2.2.5.

Find the properties and determine whether water at each of the following states is a compressed liquid, a saturated mixture, or a superheated vapor.

(A) 10 Mpa and 0.0037 m^3/kg, (B) 10 kPa and 12EC, (C) 1 Mpa and 192EC, (D) 200 kPa and 132EC, (E) 120EC and 7.5 kJ/[(kg)K], and (F) 1 Mpa and x=0.7629.

To solve this problem by CyclePad, we take the following steps:

1. Build
   (A) Take a BEGIN and an END from the closed-system inventory shop and connect them.
   (B) Switch to analysis mode.
2. Analysis
   (A) Input the given information: (a) substance is water, and (b) pressure is 10 MPa and sp. volume is 0.0037 m^3 /kg.
3. Display results

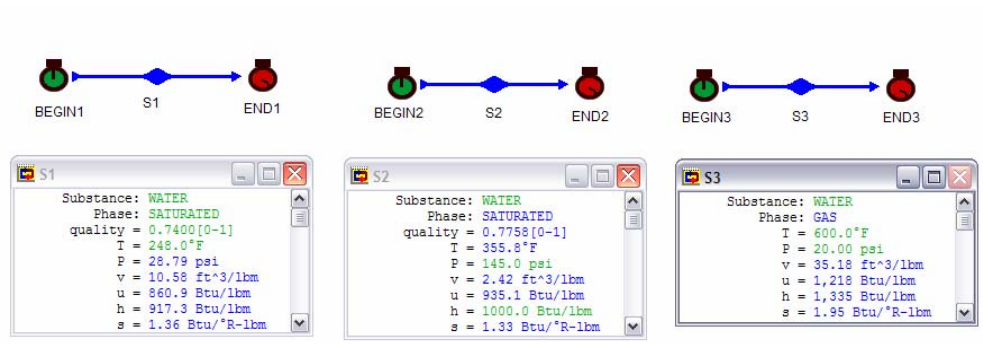

Figure E2.2.5a. Water property relationships

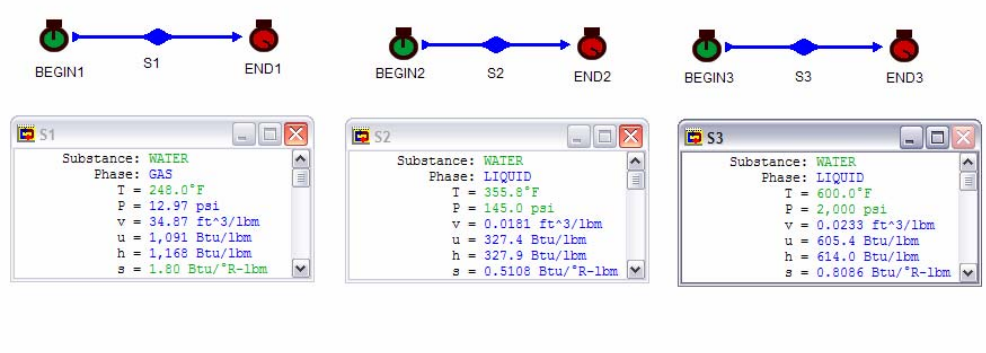

Figure E2.2.5b. Water property relationships

The answers are: (A) saturated mixture, x=0.1356, T=311EC, u=1549 kJ/kg, h=1586 kJ/kg, s=3.67 kJ/[(kg)K]; (B) compressed liquid, v=0.0010 m^3/kg, u=50.36 kJ/kg, h=50.37 kJ/kg, s=0.1803 kJ/[(kg)K]; (C) compressed liquid, v=0.2014 m^3/kg, u=2607 kJ/kg, h=2808 kJ/kg, s=6.65 kJ/[(kg)K]; (D) superheated vapor (gas), v=0.9153 m^3/kg, u=2548 kJ/kg, h=2731 kJ/kg, s=7.19 kJ/[(kg)K]; (E) superheated vapor (gas), p=94.92 kPa, v=0.9153 m^3/kg, u=2537 kJ/kg, h=2717 kJ/kg,; (F) saturated mixture, T=179.9EC, v=0.1486 m^3/kg, u=2151 kJ/kg, h=2300 kJ/kg,.

Example 2.2.6.

Find the properties and determine whether water at each of the following states is a compressed liquid, a saturated mixture, or a superheated vapor.

(A) 248EF and x=0.74, (B) 145 psia and h=1000 Btu/lbm, (C) 20 psia and 600EF, (D) 248EF and s=1.8 Btu/[lbm(R)], (E) 145 psia and 355.8EF, and (F) 2000 psia and 600EF.

To solve this problem by CyclePad, we take the following steps:

1. Build
   (A) Take a BEGIN and an END from the closed-system inventory shop and connect them.
   (B) Switch to analysis mode.
2. Analysis
   (A) Input the given information: (a) substance is water, and (b) temperature is 248EF and phase is saturated with x=0.74.
3. Display results

The answers are: (A) saturated mixture, p=28.79 psia, v=10.58 ft^3/lbm, u=860.9 Btu/lbm, h=917.3 Btu/lbm, s=1.36 Btu/[lbm(R)]; (B) saturated mixture, x=0.7758, T=355.8 EF, v=2.42 ft^3/lbm, u=935.1 Btu/lbm, s=1.33 Btu/[lbm(R)]; (C) superheated vapor (gas), v=35.18 ft^3/lbm, u=1218 Btu/lbm, h=917.3 Btu/lbm, s=1.36 Btu/[lbm(R)]; (D) superheated vapor (gas), p=12.97 psia, v=34.87 ft^3/lbm, u=1091 Btu/lbm, h=1168 Btu/lbm, s=1.36 Btu/[lbm(R)]; (E) saturated mixture, x=0.7758, v=2.42 ft^3/lbm, u=935.1 Btu/lbm, h=1000 Btu/lbm, s=1.33 Btu/[lbm(R)]; (F) compressed liquid, v=0.0233 ft^3/lbm, u=605.4 Btu/lbm, h=614.0 Btu/lbm, s=0.8086 Btu/[lbm(R)].

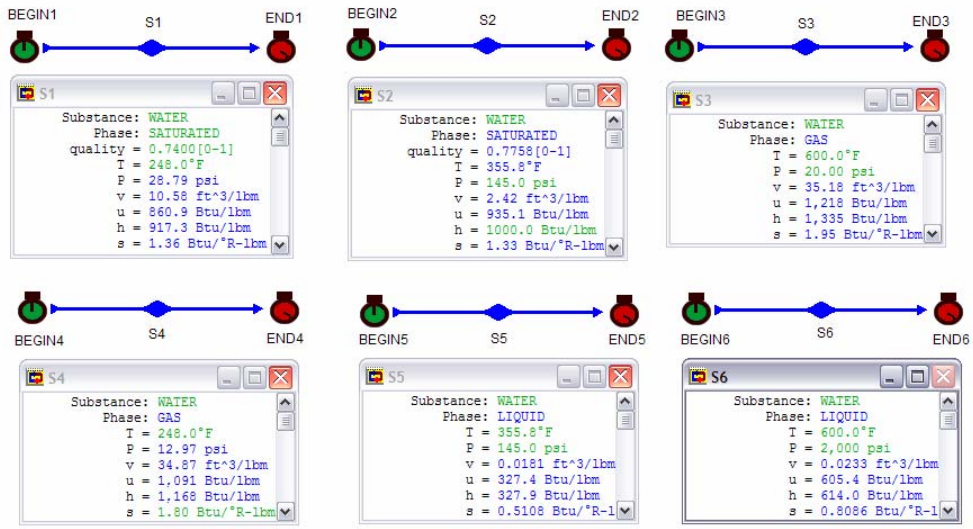

Figure E2.2.6. Water property relationships

Example 2.2.7.

Find the properties and determine whether Refrigerant-134A at each of the following states is a compressed liquid, a saturated mixture, or a superheated vapor.

(A) 20EC and x=0.74, (B) 1000 kPa and h=450 kJ/kg, and (C) 0.15 Mpa and 40EC.

To solve this problem by CyclePad, we take the following steps:

1. Build
   (A) Take a BEGIN and an END from the closed-system inventory shop and connect them.
   (B) Switch to analysis mode.
2. Analysis
   (A) Input the given information: (a) substance is Refrigerant-134A, and (b) T=20EC, saturated mixture phase and x=0.74.
3. Display results

The answers are: (A) saturated mixture, p=572.8 kPa, v=0.0269 m^3/kg, u=362.4 kJ/kg, h=362.4 kJ/kg, s=1.56 kJ/[(kg)K]; (B) superheated vapor (gas), T=67.79EC, v=0.0240 m^3/kg, u=426.0 kJ/kg, s=1.81 kJ/[(kg)K]; (C) superheated vapor (gas), v=0.1659 m^3/kg, u=411.6 kJ/kg, h=436.5 kJ/kg, s=1.91 kJ/[(kg)K];

Figure E2.2.7. Refrigerant-134A property relationships

Wu,

Example 2.2.8.

Find the properties and determine whether ammonia at each of the following states is a compressed liquid, a saturated mixture, or a superheated vapor.

(A) 20EC and x=0.74, (B) 1000 kPa and h=450 kJ/kg, and (C) 0.15 Mpa and 40EC.

To solve this problem by CyclePad, we take the following steps:

1. Build
   (A) Take a BEGIN and an END from the closed-system inventory shop and connect them.
   (B) Switch to analysis mode.
2. Analysis
   (A) Input the given information: (a) substance is ammonia , and (b) T=20EC, saturated mixture phase and x=0.74.
3. Display results

The answers are: (A) saturated mixture, p=857.2 kPa, v=0.1109 m^3/kg, u=1150 kJ/kg, h=1152 kJ/kg, s=4.03 kJ/[(kg)K]; (B) saturated mixture, x=0.1306, T=24.89EC, v=0.0182 m^3/kg, u=448.3 kJ/kg,; (C) superheated vapor (gas), v=1.01 m^3/kg, u=1406 kJ/kg, h=1557 kJ/kg, s=6.22 kJ/[(kg)K];

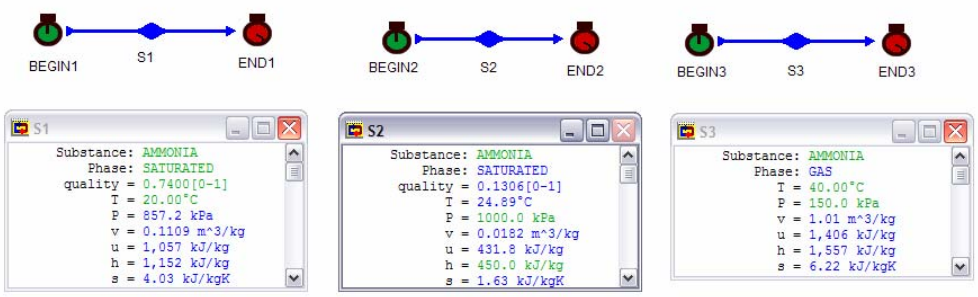

Figure E2.2.8. Ammonia property relationships

Example 2.2.9.

Find the properties and determine whether Refrigerant-22 at each of the following states is a compressed liquid, a saturated mixture, or a superheated vapor.

(A) 20EC and x=0.74, (B) 1000 kPa and 20EC, and (C) 0.15 Mpa and 40EC.

To solve this problem by CyclePad, we take the following steps:

1. Build
   (A) Take a BEGIN and an END from the closed-system inventory shop and connect them.
   (B) Switch to analysis mode.
2. Analysis

(A) Input the given information: (a) substance is Refrigerant-22, and (b) T=20EC, saturated mixture phase and x=0.74.

3. Display results

The answers are: (A) saturated mixture, p=909.9 kPa, v=0.195 m^3/kg, u=206.9 kJ/kg, h=207.7 kJ/kg, s=0.7331 kJ/[(kg)K]; (B) compressed liquid, v=0.0 m^3/kg, u=68.67 kJ/kg, s=0.2588 kJ/[(kg)K]; (C) superheated vapor (gas), v=0.1970 m^3/kg, u=253.9 kJ/kg, h=283.5 kJ/kg, s=1.15 kJ/[(kg)K];

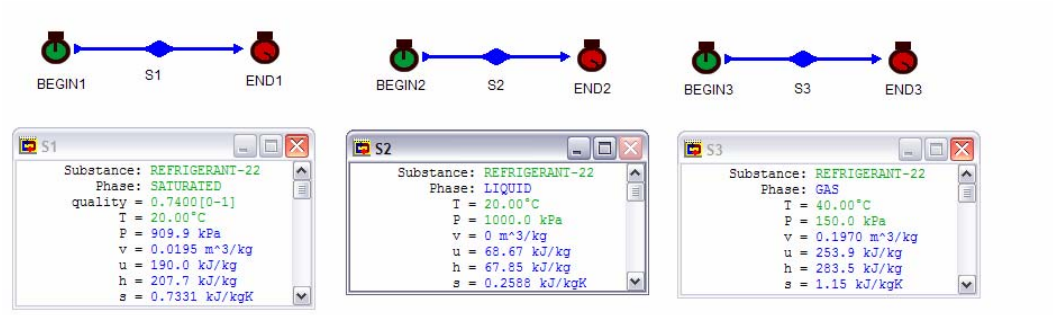

Figure E2.2.9. Refrigerant-22 property relationships

Example 2.2.10.

Find the properties and determine whether Refrigerant-12 at each of the following states is a compressed liquid, a saturated mixture, or a superheated vapor.

(A) 60EF and x=0.74, (B) 60 psia and v=0.3 ft^3/lbm, and (C) 20 psia and 100EF.

To solve this problem by CyclePad, we take the following steps:

1. Build
   (A) Take a BEGIN and an END from the closed-system inventory shop and connect them.
   (B) Switch to analysis mode.
2. Analysis
   (A) Input the given information: (a) substance is water, and (b) temperature is 60EF and phase is saturated with x=0.74.
3. Display results

The answers are: (A) saturated mixture, p=72.47 psia, v=0.4164 ft^3/lbm, u=61.8 Btu/lbm, h=67.38 Btu/lbm, s=0.134 Btu/[lbm(R)]; (B) saturated mixture, x=0.4366, T=48.57 EF, u=43.42 Btu/lbm, h=46.74 Btu/lbm; (C) superheated vapor (gas), v=2.50 ft^3/lbm, u=83.79 Btu/lbm, h=92.76 Btu/lbm, s=0.2010 Btu/[lbm(R)];

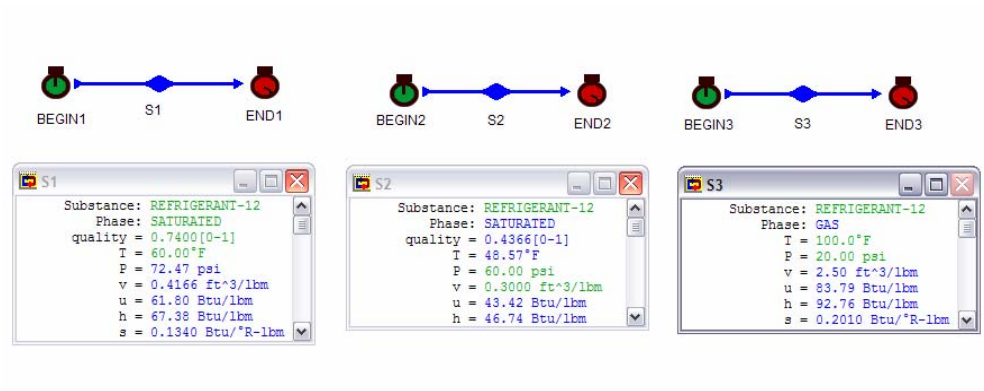

Figure E2.2.10. Refrigerant-12 property relationships

Homework 2.2. Pure substances

1. What is a pure substance?
2. How many independent intensive properties does a pure substance have?
3. What is a phase? State the difference between a gas and a vapor.
4. Show the critical point, superheated vapor region, compressed liquid region, saturated mixture region, saturated liquid line, and saturated vapor line on a T-v phase diagram for a pure substance.
5. Draw a constant pressure heating process from compressed liquid region to superheated vapor region on a T-v phase diagram for a pure substance.
6. Is water a pure substance? Why?
7. What is the difference between saturated liquid and compressed liquid?
8. What is quality and what is moisture content of a saturated mixture of water? Is quality defined in the compressed liquid region?
9. Why water boils at lower temperature on the mountain than at sea level? As the saturation pressure is increased, does the saturation temperature increase?
10. Are the temperature and pressure dependent properties in the saturated mixture region?
11. Under what conditions are pressure and temperature dependent rather than independent properties of a pure substance?
12. What happens when a saturated vapor is heated at constant pressure?
13. What happens when a saturated liquid is cooled at constant pressure?
14. What happens when a saturated liquid is heated at constant volume?
15. What happens when a saturated vapor is compressed adiabatically?
16. What happens when a saturated liquid is expanded adiabatically?
17. Ice blocks sink in liquid water; does water expand or contract upon melting?
18. Do the liquid and vapor in a saturated mixture of the same pure substance have the same pressure and temperature?
19. Define the subscripts f and g. To what states do these subscripts refer?
20. Define the term moisture content. How is this term related to quality?
21. What is meant by the critical point?

22. Is it true that the density of a saturated mixture follows the equation, $\Delta = (1-x)\Delta_f + x\,\Delta_g = \Delta_f + x\,\Delta_{fg}$?
23. Why do we arbitrarily select the internal energy value of a pure substance to be zero at a reference state? Is absolute value or relative value of the internal energy more important in application? Why?
24. Why are saturated mixture states simpler to tabulate than superheated vapor states?
25. Why are compressed liquid states of many pure substances not tabulated?
26. In the absence of compressed liquid state tables, how do you find the internal energy of the compressed liquid by given the pressure and temperature of the state?
27. In the absence of compressed liquid state tables, how do you find the specific volume of the compressed liquid by given the pressure and temperature of the state?
28. Can liquid and vapor water be in equilibrium at 20 psia and 300EF?
29. What are u_f, u_g and u_{fg}?
30. Can u ever be larger than h?
31. What is "latent heat of vaporization"? What properties are related to latent heat of vaporization?
32. For a system containing H_2O in thermodynamic equilibrium, indicate whether the following statements are true or false:
    (A) The state of a system is determined by pressure alone.
    (B) The state of a system is determined by pressure and temperature in the superheated region.
    (C) The state of a system is determined by pressure and temperature in the saturated mixture region.
    (D) The state of a system is determined by pressure and temperature in the subcooled region.
    (E) Compressed liquid exists in two phases.
    (F) When two phases exist the state is determined by pressure alone.
    (G) When two phases exist the state is determined by pressure and temperature.
    (H) Two properties determine a state.
33. The principal coordinates of the Mollier diagram are h (enthalpy) and s (entropy). How is an isentropic (constant entropy) process shown on a Mollier diagram? How is a throttling (constant enthalpy) process shown on a Mollier diagram?
34. There is no constant-temperature line in the saturated mixture region on the Mollier diagram. How do you show a constant-temperature process in the saturated mixture region on the Mollier diagram?
35. Complete the following table for water using CyclePad:

State	T(EC)	p(kPa)	v(m^3/kg)	u(kJ/kg)	x(%)
A	50		5		
B		200			100
C	200	400			
D	600	6000			
E		500			50
F		100		2000	
G		20			97

ANSWER: A(2.35 kPa, 1136 kJ/kg, 0.4150), B(120.2EC, 0.8859 m^3/kg, 2529 kJ/kg), C(0.5342 m^3/kg, 2656 kJ/kg, superheated vapor), D(0.0653 m^3/kg, 3267 kJ/kg,

superheated vapor), E(151.9EC, 0.1880 m^3/kg, 1600 kJ/kg), F(99.63EC, 1.28 m^3/kg, 0.7579), G(60.07EC, 7.42 m^3/kg, 2390 kJ/kg)).

36. Complete the following table for water using CyclePad:

State	T(EF)	p(psia)	v(ft^3/lbm)	h(Btu/lbm)	x(%)
A	100			1000	
B		100	2		
C	500	400			
D	270				43
E		5			87
F		20		1100	
G	100	2			
H	600	600			

ANSWER: A(0.9503 psia, 314.8 ft^3/lbm, 0.8991), B(327.9 EF, 697.7 Btu/lbm, 0.4489), C(1.45 ft^3/lbm, 1243 Btu/lbm, superheated vapor), D(41.84 psia, 4.34 ft^3/lbm, 639.7 Btu/lbm), E(162.2EF, 64.11 ft^3/lbm, 1001 Btu/lbm), F(227.9EF, 18.93 ft^3/lbm, 0.9414), G(0.0161ft^3/lbm,68.02 Btu/lbm, compressed liquid), H(0.9515 ft^3/lbm,1289 Btu/lbm, superheated vapor).

37. Steam has an entropy of 1.325 Btu/lbm(R) at 100 psia. Determine the temperature, quality and moisture content of the steam.
ANSWER: 327.9EC, 0.7534, 0.2466.

38. Steam at a pressure of 600 psia has an enthalpy value of 1295 Btu/lbm. Determine the temperature and specific volume of the steam.
ANSWER: 609.2EF, 0.9639 ft^3/lbm.

39. Complete the following steam table using CyclePad.

State	p psia	T EF	v ft^3/lbm	u Btu/lbm	h Btu/lbm	s Btu/lbm(R)	x %
1		212					0
2	90						60
3	120				910		
4	800	1000					
5	2000	600					
6	30		13.72				
7	50	370					
8	1000	500					
9		300					20
10	80						100

ANSWER: 1{14.7 psia, 0.0167 ft^3/lbm, 180.1 Btu/lbm, 180.2 Btu/lbm, 0.3121 Btu/[lbm(EF)]}, 2{320.3EF, 2.95 ft^3/lbm, 778.7 Btu/lbm, 827.8 Btu/lbm, 1.15 Btu/[lbm(EF)]}, 3{341.3EF, 2.54 ft^3/lbm, 853.6 Btu/lbm, 1.24 Btu/[lbm(EF)], 0.68}, 4{1.06 ft^3/lbm, 1357 Btu/lbm, 1512 Btu/lbm, 1.68 Btu/[lbm(EF)], superheated vapor}, 5{0.0233 ft^3/lbm, 605.4 Btu/lbm, 614 Btu/lbm, 0.8086 Btu/[lbm(EF)], compressed liquid}, 6{250.3EF, 1086 Btu/lbm, 1162 Btu/lbm, 1.70 Btu/[lbm(EF)], 0.9974}, 7{9.88 ft^3/lbm, 1130 Btu/lbm, 1220 Btu/lbm, 1.72 Btu/[lbm(EF)], superheated vapor}, 8{0.0204 ft^3/lbm, 483.8 Btu/lbm, 487.6 Btu/lbm, 0.6874

Btu/[lbm(EF), compressed liquid}, 9{66.97 psia, 1.31 ft^3/lbm, 435.7 Btu/lbm, 451.9 Btu/lbm, 0.6769 Btu/[lbm(EF)]}, 10{312.1EF, 5.47 ft^3/lbm, 1103 Btu/lbm, 1184 Btu/lbm, 1.62 Btu/[lbm(EF)]}.

40. Complete the following steam table using CyclePad.

State	p psia	T EF	v ft^3/lbm	u Btu/lbm	h Btu/lbm	s Btu/lbm(R)	x %
1	4					1.8	
2	80						82
3	100	600					
4		400					90
5		600				1.9	
6	600				1100		
7	550			1300			
8		500	3				
9		600			1150		
10	80		2.41				

ANSWER: 1{152.8EF, 87.86 ft^3/lbm, 1024 Btu/lbm, 1089 Btu/lbm, 0.9620]}, 2{312.1EF, 4.49 ft^3/lbm, 954.8 Btu/lbm, 1021 Btu/lbm, 1.41 Btu/[lbm(EF)]}, 3{6.23 ft^3/lbm, 1214 Btu/lbm, 1329 Btu/lbm, 1.76 Btu/[lbm(EF)], superheated vapor}, 4{247.1 psia, 1.68 ft^3/lbm, 1042 Btu/lbm, 1119 Btu/lbm, 1.43 Btu/[lbm(EF)]}, 5{28.62 psia, 22.24 ft^3/lbm, 1218 Btu/lbm, 1334 Btu/lbm, superheated vapor}, 6{486.3EF, 0.6638 ft^3/lbm, 1026 Btu/lbm, 1.34 Btu/[lbm(EF)], 0.8583}, 7{853.3EF, 1.44 ft^3/lbm, 1439 Btu/lbm, 1.67 Btu/[lbm(EF)], superheated vapor}, 8{204.3 psia, 1167 Btu/lbm, 1268 Btu/lbm, 1.63 Btu/[lbm(EF)], superheated vapor}, 9{1542 psia, 0.2603 ft^3/lbm, 1076 Btu/lbm, 1.32 Btu/[lbm(EF)], 0.9705}, 10{312.1EF, 641.7 Btu/lbm, 677.4 Btu/lbm, 0.9655 Btu/[lbm(EF)], 0.4384}.

41. Complete the following R-12 table using CyclePad.

State	p kPa	T EC	v m^3/kg	u kJ/kg	h kJ/kg	s kJ/kg(K)	x %
1	250						100
2	1250					0.6998	
3	1250						0
4	250				86.06		

ANSWER: 1{20.64EC, 0.0680 m^3/kg, 167.9 kJ/kg, 184.8 kJ/kg, 0.6998 kJ/[kg(EC)], 1}, 2{138.9EC, 0.0147 m^3/kg, 195.2 kJ/kg, 213.5 kJ/kg, superheated vapor}, 3{123.9EC, 0.00083 m^3/kg, 85.03 kJ/kg, 86.06 kJ/kg, 0.3071 kJ/[kg(EC)], 0}, 4{20.64EC, 0.0250 m^3/kg, 79.84 kJ/kg, 0.3298 kJ/[kg(EC)], 0.3611}.

42. Complete the following R-12 table using CyclePad.

State	p psia	T EF	v ft^3/lbm	u Btu/lbm	h Btu/lbm	s Btu/lbm(R)	x %
1	36						100
2	180					0.1672	
3	180						0

4	36				36.86		

ANSWER: 1{20.26EF, 1.10 ft^3/lbm, 72.14 Btu/lbm, 79.41 Btu/lbm, 0.1672 Btu/[lbm(EF)], 1}, 2{138.4EF, 0.2368 ft^3/lbm, 83.89 Btu/lbm, 91.73 Btu/lbm, superheated vapor}, 3{123.3EF, 0.0133 ft^3/lbm, 36.42 Btu/lbm, 36.86 Btu/lbm, 0.0731 Btu/[lbm(EF)], 0}, 4{20.26EF, 0.4023 ft^3/lbm, 34.19 Btu/lbm, 0.0785 Btu/[lbm(EF)], 0.36}.

43. Complete the following R-22 table using CyclePad.

State	p kPa	T EC	v m^3/kg	u kJ/kg	h kJ/kg	s kJ/kg(K)	x %
1	250						100
2	1250					0.9584	
3	1250						0
4	250				83.55		

ANSWER: 1{-19.49EC, 0.0913 m^3/kg, 219.5 kJ/kg, 242.3 kJ/kg, 0.9584 kJ/[kg(EC)], 1}, 2{59.23EC, 0.0221 m^3/kg, 255.4 kJ/kg, 282.9 kJ/kg, superheated vapor}, 3{31.78EC, 0.000857 m^3/kg, 82.48 kJ/kg, 83.55 kJ/kg, 0.3077 kJ/[kg(EC)], 0}, 4{-19.49EC, 0.0260 m^3/kg, 77.08 kJ/kg, 0.3327 kJ/[kg(EC)], 0.2785}.

44. Complete the following R-22 table using CyclePad.

State	p psia	T EF	v ft^3/lbm	u Btu/lbm	h Btu/lbm	s Btu/lbm(R)	x %
1	40						100
2	200					0.2278	
3	200						0
4	40				38.09		

ANSWER: 1{1.48EF, 1.34 ft^3/lbm, 94.78 Btu/lbm, 104.6 Btu/lbm, 0.2278 Btu/[lbm(EF)], 1}, 2{145.3EF, 0.3204 ft^3/lbm, 110.3 Btu/lbm, 122.2 Btu/lbm, superheated vapor}, 3{96.22EF, 0.0139 ft^3/lbm, 37.57 Btu/lbm, 36.09 Btu/lbm, 0.0773 Btu/[lbm(EF)], 0}, 4{1.48EF, 0.3978 ft^3/lbm, 35.17 Btu/lbm, 0.0836 Btu/[lbm(EF)], 0.2908}.

45. Complete the following R-134a table using CyclePad.

State	p kPa	T EC	v m^3/kg	u kJ/kg	h kJ/kg	s kJ/kg(K)	x %
1	200						100
2	1000					1.73	
3	1000						0
4	200				255.6		

ANSWER: 1{-10.23EC, 0.1002 m^3/kg, 392.1 kJ/kg, 392.1 kJ/kg, 1.73 kJ/[kg(EC)], 1}, 2{44.99EC, 0.0212 m^3/kg, 404.6 kJ/kg, 425.7 kJ/kg, superheated vapor}, 3{39.34EC, 0.000871 m^3/kg, 255.6 kJ/kg, 255.6 kJ/kg, 1.19 kJ/[kg(EC)], 0}, 4{-10.23EC, 0.0342 m^3/kg, 255.5 kJ/kg, 1.21 kJ/[kg(EC)], 0.3361}.

46. Complete the following R-134a table using CyclePad.

State	p psia	T EF	v ft^3/lbm	u Btu/lbm	h Btu/lbm	s Btu/lbm(R)	x %
1	30						100

2	150					0.4136	
3	150						0
4	30				110.7		

ANSWER: 1{15.08EF, 1.56 ft^3/lbm, 168.8 Btu/lbm, 168.8 Btu/lbm, 0.4136 Btu/[lbm(EF)], 1}, 2{115.0EF, 0.3287 ft^3/lbm, 174.2 Btu/lbm, 183.2 Btu/lbm, superheated vapor}, 3{105.1EF, 0.0140 ft^3/lbm, 110.7 Btu/lbm, 110.7 Btu/lbm, 0.2851 Btu/[lbm(EF)], 0}, 4{15.08EF, 0.5388 ft^3/lbm, 110.7 Btu/lbm, 0.2911 Btu/[lbm(EF)], 0.3409}.

47. Complete the following ammonia table using CyclePad.

State	p kPa	T EC	v m^3/kg	u kJ/kg	h kJ/kg	s kJ/kg(K)	x %
1	220						100
2	1100					5.57	
3	1100						0
4	220				312.9		

ANSWER: 1{-16.67EC, 0.5445 m^3/kg, 1303 kJ/kg, 1422 kJ/kg, 5.57 kJ/[kg(EC)], 1}, 2{97.38EC, 0.1573 m^3/kg, 1483 kJ/kg, 1655 kJ/kg, superheated vapor}, 3{28.03EC, 0.0017 m^3/kg, 311.0 kJ/kg, 312.9 kJ/kg, 1.17 kJ/[kg(EC)], 0}, 4{-16.67EC, 0.0875 m^3/kg, 293.6 kJ/kg, 1.24 kJ/[kg(EC)], 0.1584}.

48. Complete the following ammonia table using CyclePad.

State	p psia	T EF	v ft^3/lbm	u Btu/lbm	h Btu/lbm	s Btu/lbm(R)	x %
1	30						100
2	150					1.33	
3	150						0
4	30				130.3		

ANSWER: 1{-0.5475EF, 9.23 ft^3/lbm, 559.5 Btu/lbm, 610.8 Btu/lbm, 1.33 Btu/[lbm(EF)], 1}, 2{204.0EF, 2.66 ft^3/lbm, 636.7 Btu/lbm, 710.3 Btu/lbm, superheated vapor}, 3{78.8EF, 0.0266 ft^3/lbm, 129.6 Btu/lbm, 130.3 Btu/lbm, 0.2716 Btu/[lbm(EF)], 0}, 4{-0.5475EF, 1.45 ft^3/lbm, 122.2 Btu/lbm, 0.2878 Btu/[lbm(EF)], 0.1552}.

49. Complete the following methane table using CyclePad.

State	p kPa	T EC	v m^3/kg	u kJ/kg	h kJ/kg	s kJ/kg(K)	x %
1	300						100
2	1500					9.17	
3	1500						0
4	300				-108.3		

ANSWER: 1{-146.6EC, 0.2058 m^3/kg, 186.0 kJ/kg, 246.5 kJ/kg, 9.17 kJ/[kg(EC)], 1}, 2{-79.21EC, 0.0594 m^3/kg, 366.8 kJ/kg, 366.9 kJ/kg, superheated vapor}, 3{-114.7EC, 0.0029 m^3/kg, -112.7 kJ/kg, -108.3 kJ/kg, 6.23 kJ/[kg(EC)], 0}, 4{-146.6EC, 0.0554 m^3/kg, -124.6 kJ/kg, 6.36 kJ/[kg(EC)], 0.2604}.

50. Complete the following methane table using CyclePad.

State	p	T	v	u	h	s	x

	psia	EF	ft^3/lbm	Btu/lbm	Btu/lbm	Btu/lbm(R)	%
1	60						100
2	300					1.33	
3	300						0
4	60				130.3		

ANSWER: 1{-222.3EF, 2.44 ft^3/lbm, 82.29 Btu/lbm, 108.8 Btu/lbm, 2.17 Btu/[lbm(EF)], 1}, 2{-95.18EF, 0.7080 ft^3/lbm, 161.0 Btu/lbm, 161.0 Btu/lbm, superheated vapor}, 3{-159.6EF, 0.0502 ft^3/lbm, -33.34 Btu/lbm, -30.55 Btu/lbm, 1.54 Btu/[lbm(EF)], 0}, 4{-222.3EF, 0.7729 ft^3/lbm, -38.98 Btu/lbm, 1.58 Btu/[lbm(EF)], 0.3056}.

51. Complete the following table for water:

State	T(EF)	p(psia)	v(ft^3/lbm)	u(Btu/lbm)	x(%)
A	100		0.01613		
B	200				50
C	110	2000			
D		60		1140.8	
E	290		2.997		
F	100	500			
G	640		0.1495		
H	1000		0.3945		
I	320		22.98		
J	420			468.1	
K	212			1077.0	
L	440				90
M	35	4000			
N	400	8000			
O	212			449.3	
P	530		0.5108		
Q		1000		1153.7	
R	550			1174.6	
S	510		0.3774		
T	300	2000			
U	670			720.9	
V	320				20
W		60		1156	
X	500	100			
Y	550			939.4	
Z	45	1000			

52. Complete the following table for water:

State	T(EF)	p(psia)	v(ft^3/lbm)	u(Btu/lbm)	x(%)
A		600	1.411		
critical point					
B	350			1031	
C	470				40
D	35		4200		

E		1500	0.4350	
F	125	1000		
G	480	565.5		
H	212	100		
I	560		0.05863	

53. Complete the following table for water:

State	T(EC)	p(kPa)	v(m^3/kg)	u(kJ/kg)	x(%)
1	100	500			
2	75	4000			
3		3000		1164.7	
4		1000			50
5		100	0.1703		
6	60	5000			
7	155		0.001096		
8		22000	0.002952		
9	135				100
10	25	3169			

54. Complete the following table for R-134a:

State	T(EC)	p(kPa)	v(m^3/kg)	u(kJ/kg)	x(%)
11	50	800			
12	0				10
13	-50	300			
14	5			293.7	
15	20		0.01139		

55. Complete the following table for ammonia:

State	T(EC)	p(kPa)	v(m^3/kg)	u(kJ/kg)	x(%)
16	10				50
17	0		2.647		
18	50			510.4	
19	20		0.1492		
20	-10	4000			

56. Water in a 5 ft^3 container is at 40EF and 16 psia. Determine the mass, internal energy and entropy of the water.
    ANSWER: 0.1501 lbm, 171.9 Btu,, 0.9083 Btu/EF.
57. At 14.7 psia, steam has a specific volume of 30 ft^3/lbm. Determine the quality, specific internal energy and specific enthalpy of the steam at this state.
    ANSWER: superheated vapor, 1103 Btu/lbm, 1184 Btu/lbm.
58. Seven pounds of steam with a pressure of 30 psia and a specific volume of 25 ft^3/lbm is flowing in a system. Determine the total enthalpy of the steam associated with this state.
    ANSWER: 9990 Btu, 44.81 Btu/(EF).
59. At a vacuum of 2 psia, steam has a specific volume of 101.7 ft^3/lbm. Determine the quality, internal energy and enthalpy of the steam at this state.
    ANSWER: superheated vapor, 1599 Btu/lbm, 1818 Btu/lbm.

60. A rigid tank with a volume of 0.08 m^3 contains 1 kg of saturated mixture ammonia at 40EC. The tank is now slowly heated. The ammonia temperature is increased to 50EC. Will the liquid level inside eventually rise to the top or drop to the bottom of the tank? The process is a constant volume process. Draw the process on a T-v diagram, and show the saturated liquid line and saturated vapor line as well as the critical point. It is known that the specific volume of ammonia at critical point is 0.00426 m^3/kg.
61. A rigid tank with a volume of 0.002 m^3 contains 1 kg of saturated mixture ammonia at 40EC. The tank is now slowly heated. The ammonia temperature is increased to 50EC. Will the liquid level inside eventually rise to the top or drop to the bottom of the tank? The process is a constant volume process. Draw the process on a T-v diagram, and show the saturated liquid line and saturated vapor line as well as the critical point. It is known that the specific volume of ammonia at critical point is 0.00426 m^3/kg.
62. A 1-m^3 rigid tank is filled with 0.1-m^3 saturated liquid and 0.9-m^3 saturated vapor of ammonia at 0EC. What is the total mass and quality of ammonia in the tank?
    ANSWER: m_f=63.86 kg, m_g=3.11 kg, m_{total}=66.97 kg, x=0.04644.
63. A tank whose volume is unknown is divided into two parts by a partition. One side of the tank contains 1-m^3 of R-134a that is saturated liquid at 0.8 Mpa, while the other side is evacuated. The partion is now removed, and the refrigerant fills the entire tank. If the final state of the refrigerant is 25EC and 100 kPa, determine the initial mass of R-134a in the tank, and the volume of the tank.
    ANSWER: m_f=11.81 kg, V=2.81 m^3.
64. Heat is removed from a superheated steam vapor at constant volume until liquid just begins to form. Show this process on a p-v diagram, and on a T-p diagram.
65. A sealed rigid vessel has volume of 35 ft^3 and contains 2 lbm of water at 200EF. The vessel is now heated. If a safety pressure valve is installed, at what pressure should the valve be set to have a maximum temperature of 400EF?
66. Steam at 50 psia is known to have an enthalpy of 1038 Btu/lbm. What is its temperature? What is its internal energy? What is its specific volume? What is its entropy?
67. A tank having a volume of 1 m^3 contains 0.01 m^3 of saturated liquid water and 0.99 m^3 of saturated vapor at 14.7 psia. What is the mass of the saturated liquid water at this state? What is the mass of the saturated vapor at this state? What is the quality of the water at this state?
68. Find the latent heat of vaporization of water at 14.7 psia. What is h_{fg} of water at 14.7 psia? What is u_{fg} of water at 14.7 psia?

2.3. IDEAL GASES

An *ideal gas* is a hypothetical substance. The mathematic definition of an ideal gas is that the ratio pv/T is exactly equal to R at all pressures and temperatures (note that when using this equation, the pressure and temperature must be expressed as absolute quantities), otherwise it is called a real gas. At low densities, the ratio pv/T has, by experiment, the same

value of R (*gas constant*) for a specific gas. R is the gas constant of a gas. Different gases have different gas constants.

How close is a real gas to an ideal gas? This is an important question. It is convenient to use such a simple equation of state, but we must know how much accuracy we sacrifice for the convenience. In general a gas with a low pressure and high temperature is considered to be an ideal gas. But high and low are relative terms. For example, 100 kPa may be considered a high pressure, if very good accuracy is required. On the other hand, 100 kPa may be considered a low pressure, if good accuracy is not required.

The relation pv=RT is known as the ideal-gas equation of state. The gas constant R is given by $R=R_u/M$, where R_u is the *universal gas constant*, which has the same value for all gases, and M is the *molar mass*. The value of R_u, expressed in various units, is

R_u=8.314 kJ/kmol(K)=1.986 Btu/lbmol(R)=1545 ft(lbf)/lbmol(R)

Experiments by Joule show that internal energy (u) of an ideal gas is a function of temperature (T) only. Therefore, enthalpy (h=u+pv=u+RT), specific heat at constant pressure (c_p) and specific heat at constant volume (c_v) of an ideal gas must also each be a function of temperature (T) only.

The change of internal energy and change of enthalpy are given by the following equations:

$$)u=Ic_v dT \tag{2.3.1}$$

and

$$)h=Ic_p dT \tag{2.3.2}$$

The change of entropy is given by the following equations:

$$)s=Ic_v dT/T + R\ Idv/v \tag{2.3.3}$$

and

$$)s=Ic_p dT/T - R\ Idp/p \tag{2.3.4}$$

It is possible, but long and tedious, to calculate property changes of an ideal gas in a straight forward manner using above equations. It certainly would be convenient if tables or charts existed listing the values of the thermodynamic properties. Fortunately, tables and charts for many ideal gases are available.

The specific heats (both c_p and c_v) of a gas vary with temperature. The functional relationships denoting these variations are determined from experimental data. If accuracy is desired, these equations must be used. In many applications an average value of specific heat is used (based on the temperature range under consideration) for quick results. The internal energy change, enthalpy change and entropy change of the ideal gas from state 1 to state 2 can be simplified from Eqs. (2.3.1), (2.3.2), (2.3.3) and (2.3.4) and expressed as:

$$)u=c_v()T) \tag{2.3.5}$$

$$)h=c_p()T) \tag{2.3.6}$$

$$)s=c_v\,[\ln(T_2/T_1)] + R\,[\ln(v_2/v_1)] \tag{2.3.7}$$

and

$$)s=c_p\,[\ln(T_2/T_1)] - R\,[\ln(p_2/p_1)] \tag{2.3.8}$$

Air is the most important gas used in engineering thermodynamic application. The gas constant (R), specific heats (c_p and c_v) and specific heat ratio (k) of air at room temperature have the following numerical values:

R_{air}=0.06855 Btu/[lbm(R)]=0.3704 [psia(ft^3)]/[lbm(R)]=0.2870 kJ/[kg(K)]

$(c_p)_{air}$=0.240 Btu/[lbm(R)]=1.004 kJ/[kg(K)]

$(c_v)_{air}$=0.171 Btu/[lbm(R)]=0.718 kJ/[kg(K)]

k_{air}=1.4

For air and many other gases, over the range of pressures and temperatures we commonly deal with, the assumption of ideal gas behavior yields a very excellent engineering approximation. However, as we get to high pressures, deviations from ideal gas behavior may be large in magnitude. In these cases, use of the ideal gas law will depend on the degree of accuracy required for a particular problem.

The tabulation of h, u and other properties of air, using the temperature as the argument has been made and is given by Keenan and Kaye. A part of the air table is given in Table 2.3.1.

Example 2.3.1.

Find the properties (h, u, and v) of air at 100 kPa and 400 K using the ideal gas equation and air table.

The gas constant of air is 0.287 kJ/[kg(K)].

Solution: Using the ideal gas equation, we have v = RT/p = {0.287 kJ/[kg(K)]}(400 K)/(100 kPa) =1.148 m^3/kg.

Air table reads (at 300 K), h=300.19 kJ/kg, and u=214.09 kJ/kg.

Example 2.3.2.

Find the changes in enthalpy, internal energy and entropy of air if the air is heated from 100 kPa and 400 K to 100 kPa and 440 K using equations and the air table. Consider c_p and c_v

are constant during this change of states. c_p of air is 1.004 kJ/[kg(K)] and c_v is 0.718 kJ/[kg(K)].

Solution: Using Eqs. (2.3.5), (2.3.6), and (2.3.8) we have

)u=0.718(440-400)=28.72 kJ/kg

)h=1.004(440-400)=40.16 kJ/kg

)s=1.004[ln(440/400)]-0.287[ln(100/100)]=0.09569 kJ/[kg(K)]

Table 2.3.1. Air table

Thermodynamic properties of air at low pressure (SI units)

Reference level: 0 K and 1 atm

Absolute entropies may be calculated from

$$s^\circ = \phi - R \ln (p/p_0) + 4.1869 \text{ kJ/kg·K}$$

where p_0 is the reference pressure of 1 atm

T, K	h, kJ/kg	P_r	u, kJ/kg	v_r	ϕ kJ/kg K
100	99.76	0.029 90	71.06	2230	1.4143
110	109.77	0.041 71	78.20	1758.4	1.5098
120	119.79	0.056 52	85.34	1415.7	1.5971
130	129.81	0.074 74	92.51	1159.8	1.6773
140	139.84	0.096 81	99.67	964.2	1.7515
150	149.86	0.123 18	106.81	812.0	1.8206
160	159.87	0.154 31	113.95	691.4	1.8853
170	169.89	0.190 68	121.11	594.5	1.9461
180	179.92	0.232 79	128.28	515.6	2.0033
190	189.94	0.281 14	135.40	450.6	2.0575
200	199.96	0.3363	142.56	396.6	2.1088
210	209.97	0.3987	149.70	351.2	2.1577
220	219.99	0.4690	156.84	312.8	2.2043
230	230.01	0.5477	163.98	280.0	2.2489
240	240.03	0.6355	171.15	251.8	2.2915
250	250.05	0.7329	178.29	227.45	2.3325
260	260.09	0.8405	185.45	206.26	2.3717
270	270.12	0.9590	192.59	187.74	2.4096
280	280.14	1.0889	199.78	171.45	2.4461
290	290.17	1.2311	206.92	157.07	2.4813
300	300.19	1.3860	214.09	144.32	2.5153
310	310.24	1.5546	221.27	132.96	2.5483
320	320.29	1.7375	228.45	122.81	2.5802
330	330.34	1.9352	235.65	113.70	2.6111
340	340.43	2.149	242.86	105.51	2.6412

Again, searching property values from the tables or calculation from equations is tedious and long. It is time to abandon the time consuming use of property tables or calculation and move over entirely to the use of computer database software such as CyclePad. Among the nine substances listed on the CyclePad menu: air, helium, and carbon dioxide are ideal gases.

Notice that CyclePad databases account for the variation of specific heat with temperature for an ideal gas. Therefore equations using constant specific heats cannot be used in the thermodynamic analysis in this book, since the ideal gas substance using CyclePad is considered to be a gas with variable specific heats.

Example 2.3.3.

Find the properties of air at the following states: (A) 14.7 psia and 1200 R, (B) v=20 ft^3/lbm and 1500 R, and (C) 10 psia and v=16 ft^3/lbm using CyclePad.

To solve this problem by CyclePad, we take the following steps:

1. Build

Wu,

(A) Take a BEGIN and an END from the closed-system inventory shop and connect them.
(B) Switch to analysis mode.

2. Analysis
   (A) Input the given information: (a) substance is air, and (b) 14.7 psia and 1200 R.
3. Display results

The answers are: (A) v=30.2 ft^3/lbm, u=205.4 Btu/lbm, h=287.6 Btu/lbm, s=0.7691 Btu/[lbm(R)]; (B) p=27.75 psia, u=256.8 Btu/lbm, h=359.5 Btu/lbm, s=0.7791 Btu/[lbm(R)]; and (C) T=432.4 R, u=74.03 Btu/lbm, h=103.6 Btu/lbm, s=0.5509 Btu/[lbm(R)].

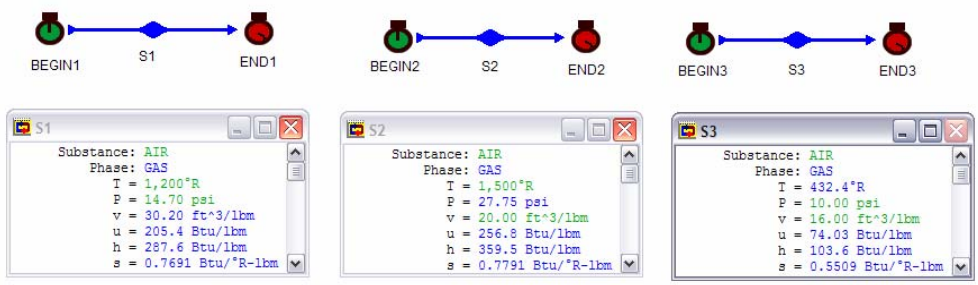

Figure E2.3.3. Air property relationships

Example 2.3.4.

Find the properties of helium at the following states: (A) 100 kPa and 700 K, (B) v=1.23 m^3/kg and 800 K, and (C) 80 kPa and v=1 m^3/kg, using CyclePad.

To solve this problem by CyclePad, we take the following steps:

1. Build
   (A) Take a BEGIN and an END from the closed-system inventory shop and connect them.
   (B) Switch to analysis mode.
2. Analysis
   (A) Input the given information: (a) substance is helium, and (b) 100 kPa and 700 K.
3. Display results

The answers are: (A) v=14.54 m^3/kg, u=2170 kJ/kg, h=3624 kJ/kg, s=10.00 kJ/[kg(K)]; (B) p=1351 kPa, u=2480 kJ/kg, h=4141 kJ/kg, s=5.29 kJ/[kg(K)]; and (C) T=38.52 K, u=119.4 kJ/kg, h=199.4 kJ/kg, s=-4.55 kJ/[kg(K)].

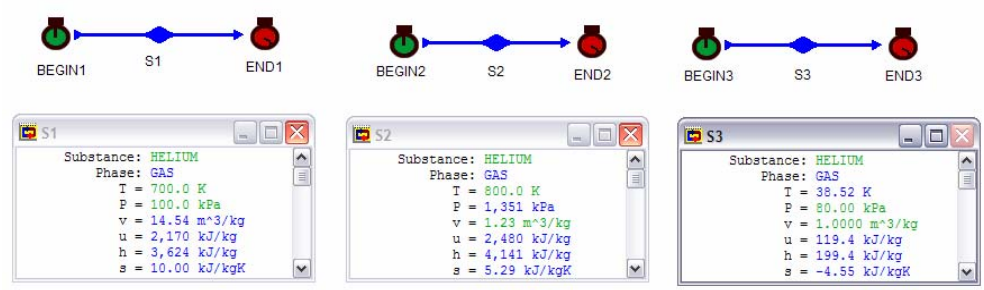

Figure E2.3.4. Helium properties

Example 2.3.5.

Find the properties of carbon dioxide (CO_2) at the following states: (A) s=1.5 kJ/[kg(K)] and 700 K, (B) v=1.23 m^3/kg and u=500 kJ/kg , and (C) 80 kPa and s=3 kJ/[kg(K)], using CyclePad.

To solve this problem by CyclePad, we take the following steps:

1. Build
   (A) Take a BEGIN and an END from the closed-system inventory shop and connect them.
   (B) Switch to analysis mode.
2. Analysis
   (A) Input the given information: (a) substance is carbon dioxide (CO_2), and (b) s=1.5 kJ/[kg(K)] and 700 K.
3. Display results

The answers are: (A) p=1612 Mpa, v=0 m^3/kg, u=456 kJ/kg, h=588.2 kJ/kg,; (B) p=117.9 kPa, T=767.5 K, h=645.0 kJ/kg, s=3.38 kJ/[kg(K)]; and (C) T=449.4 K, v=1.06 m^3/kg, u=292.8 kJ/kg, h=377.7 kJ/kg.

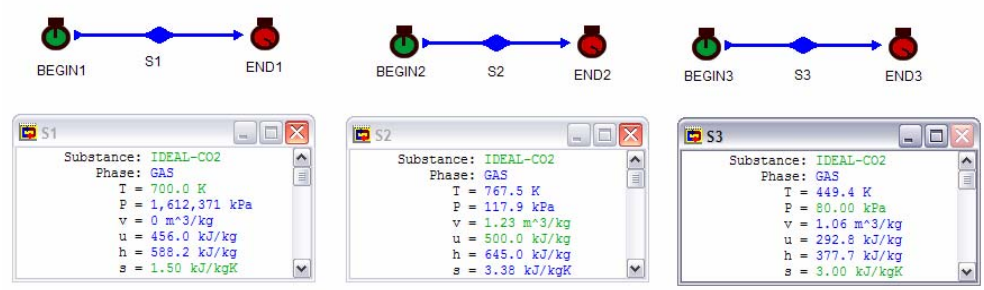

Figure E2.3.5. Carbon dioxide (CO2) properties

Example 2.3.6.

Find the changes in volume, enthalpy, internal energy and entropy of air if the air is heated from 14.7 psia and 1200 R to 14.7 psia and 1600 R using CyclePad.

To solve this problem by CyclePad, we take the following steps:

1. Build
   (A) Take a BEGIN, a combustor and an END from the closed-system inventory shop and connect them.
   (B) Switch to analysis mode.
2. Analysis
   (A) Input the given information: (a) substance is air, and (b) state 1 (input 14.7 psia and 1200 R), and state 1 (input 14.7 psia and 1600 R).
3. Display results

The answers are: (a))v=40.27-30.2=10.07 ft^3/lbm,)u=273.9-205.4 =68.5 Btu/lbm,)h=383.5-287.6=95.9 Btu/lbm,)s=0.8380-0.7691=0.0689 Btu/[lbm(R)].

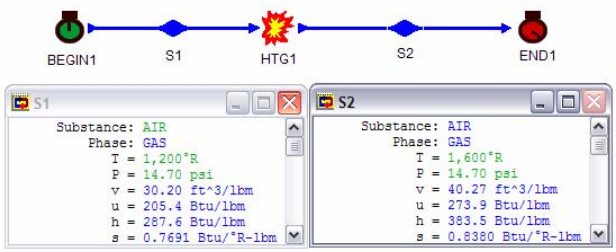

Figure E2.3.6. Air property changes

Comment: For ideal gases, h and u are functions of temperature only, but v and s are not functions of temperature only.

Example 2.3.7.

Find the changes in volume, enthalpy, internal energy and entropy of air if the air state is changed from 14.7 psia and 1200 R to 1470 psia and 1200 R using CyclePad.

To solve this problem by CyclePad, we take the following steps:

1. Build
   (A) Take a BEGIN, a combustor and an END from the closed-system inventory shop and connect them.
   (B) Switch to analysis mode.
2. Analysis
   (A) Input the given information: (a) substance is air, and (b) state 1 (input 14.7 psia and 1200 R), and state 1 (input 1470 psia and 1200 R).

3. Display results

The answers are: (a))v=0.3020-30.2=-29.90 ft^3/lbm,)u=205.4-205.4 =0 Btu/lbm,)h=287.6-287.6=0 Btu/lbm,)s=0.4537-0.7691=-0.3154 Btu/[lbm(R)].

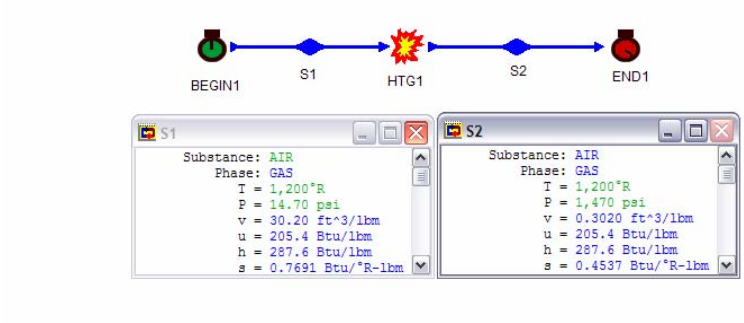

Figure E2.3.7. Air property changes

Homework 2.3. Ideal gases

1. What is an ideal gas?
2. Under what conditions would it be reasonable to treat the water as an ideal gas?
3. The liquid and vapor in a mixture of the same pure substance have the same pressure and temperature. Would two ideal gases in a mixture each exert the same pressure?
4. For a system containing H_2 at low pressure in thermodynamic equilibrium, indicate whether the following statements are true or false:
   (A) The state of the system is determined by two properties.
   (B) The internal energy increases in an isothermal expansion.
   (C) The pressure is proportional to the temperature.
   (D) the temperature decreases in an adiabatic expansion.
5. Air is a mechanical mixture of several gases. Which two gases make up the major part of air? What is the approximate molecular weight of air?
6. Does one mole of air at room temperature and pressure occupy more volume than one mole of hydrogen at the same conditions?
7. Define the specific heat at constant pressure process. Define the specific heat at constant volume process.
8. Is specific heat at constant pressure process of an ideal gas a function of temperature only?

9. Is specific heat at constant volume process of an ideal gas a function of temperature only?
10. What is the relation between specific heat at constant pressure process and specific heat at constant volume process of an ideal gas?
11. What is the relation between specific heat at constant pressure process and specific enthalpy of an ideal gas?
12. What is the relation between specific heat at constant volumee process and specific internal energy of an ideal gas?
13. Is specific enthalpy of an ideal gas a function of temperature only?
14. Is specific internal energy of an ideal gas a function of temperature only?
15. What is the specific volume and specific enthalpy of carbon dioxide at 20 psia and 180EF?
    ANSWER: 7.80 ft^3/lbm, 128.4 Btu/lbm.
16. Air at 100 psia and a specific volume of 3 ft^3/lbm is contained in a tank. Find the specific internal energy, specific enthalpy, and specific entropy of the air.
    ANSWER: 138.8 Btu/lbm, 194.3 Btu/lbm, 0.5438 Btu/[lbm(R)].
17. Carbon dioxide is at 100 psia and a specific volume of 3 ft^3/lbm. Find the specific internal energy, specific enthalpy, and specific entropy of the gas.
    ANSWER: 191.5 Btu/lbm, 247.0 Btu/lbm, 0.7035 Btu/[lbm(R)].
18. A closed rigid tank contains a gas at 20 psia and 1000ER. Find the specific volume, specific internal energy, specific enthalpy, and specific entropy of the gas, if the gas is (A) air, (B) helium, and (C) carbon dioxide.
    ANSWER: (A) 18.5 ft^3/lbm, 171.2 Btu/lbm, 239.7 Btu/lbm, 0.7043 Btu/[lbm(R)], (B) 134.0 ft^3/lbm, 740.4 Btu/lbm, 1236 Btu/lbm, 1.94 Btu/[lbm(R)], (C) 12.19 ft^3/lbm, 155.6 Btu/lbm, 200.7 Btu/lbm, 0.7345 Btu/[lbm(R)].
19. A pressure vessel with a volume of 1.2 m^3 contains a gas at 400 kPa and 50EC. Determine the mass of the gas in the vessel, if the gas is (A) air, (B) helium, and (C) carbon dioxide.
    ANSWER: (A) 5.18 kg, (B) 0.7152 kg, (C) 7.86 kg.
20. A tank is filled with air at a pressure of 42 psia and a temperature of 700ER. Find the specific volume, specific internal energy, specific enthalpy, and specific entropy of the gas.
    ANSWER: 6.17 ft^3/lbm, 119.8 Btu/lbm, 167.8 Btu/lbm, 0.5680 Btu/[lbm(R)].
21. A pressure vessel with a volume of 87 ft^3 contains a gas at 168 psia and 250EF. Determine the mass of the gas in the vessel, if the gas is (A) air, (B) helium, and (C) carbon dioxide.
    ANSWER: (A) 55.66 lbm, (B) 7.68 lbm, (C) 84.47 lbm.
22. Find the properties of air at the following states: (A) s=1.5 kJ/[kg(K)] and 700 K, (B) v=1.23 m^3/kg and u=500 kJ/kg, and (C) 80 kPa and s=3 kJ/[kg(K)], using CyclePad.
    ANSWER: (A) 48480 kPa, 0.0041 m^3/kg, u=501.7 kJ/kg, h=702.4 kJ/kg; (B) 697.6 K, 162.6 kPa, h=700.0 kJ/kg, 3.13 kJ/[kg(K)]; (C) 500.4 K, 1.79 m^3/kg, u=358.7 kJ/kg, h=502.1 kJ/kg.
23. Find the properties of air at the following states: (A) 100 kPa and 700 K, (B) v=1.23 m^3/kg and 800 K, and (C) 80 kPa and v=1 m^3/kg, using CyclePad.

ANSWER: (A) 2.01 m^3/kg, u=501.7 kJ/kg, h=702.4 kJ/kg, 3.27 kJ/[kg(K)]; (B) 186.5 kPa, u=573.4 kJ/kg, h=802.7 kJ/kg, 3.23 kJ/[kg(K)]; (C) 279.0 K, u=200.0 kJ/kg, h=280.0 kJ/kg, 2.41 kJ/[kg(K)].

24. Find the properties of air at the following states: (A) 14.7 psia and 1700 R, (B) v=20 ft^3/lbm and 1200 R, and (C) 10 psia and v=11 ft^3/lbm using CyclePad.
    ANSWER: (A) 42.79 ft^3/lbm, u=291.0 Btu/lbm, h=407.4 Btu/lbm, 0.8526 Btu/[lbm(R)]; (B) 22.20 psia, u=205.4 Btu/lbm, h=287.6 Btu/lbm, 0.7409 Btu/[lbm(R)]; (C) 297.3ER, u=50.89 Btu/lbm, h=71.25 Btu/lbm, 0.4611 Btu/[lbm(R)].
25. Find the properties of carbon dioxide (CO_2) at the following states: (A) 14.7 psia and 1200 R, (B) v=20 ft^3/lbm and 1200 R, and (C) 10 psia and v=10 ft^3/lbm using CyclePad.
    ANSWER: (A) 19.90 ft^3/lbm, u=186.7 Btu/lbm, h=240.9 Btu/lbm, 0.7850 Btu/[lbm(R)]; (B) 14.63 psia, u=186.7 Btu/lbm, h=240.9 Btu/lbm, 0.7852 Btu/[lbm(R)]; (C) 410.2ER, u=63.82 Btu/lbm, h=82.32 Btu/lbm, 0.5869 Btu/[lbm(R)].
26. Find the properties of helium at the following states: (A) 14.7 psia and 1210 R, (B) v=21 ft^3/lbm and 1508 R, and (C) 10 psia and v=11 ft^3/lbm using CyclePad.
    ANSWER: (A) 220.6 ft^3/lbm, u=895.9 Btu/lbm, h=1496 Btu/lbm, 2.33 Btu/[lbm(R)]; (B) 192.5 psia, u=1117 Btu/lbm, h=1865 Btu/lbm, 1.33 Btu/[lbm(R)]; (C) 41.04ER, u=30.38 Btu/lbm, h=50.74 Btu/lbm, -1.66 Btu/[lbm(R)].
27. A 0.5-m^3 rigid tank (tank A) containing air at 20EC and 600 kPa is connected by a valve to another 1-m^3 rigid tank (tank B) containing air at 30EC and 200 kPa. Now the valve is opened and the air is allowed to reach thermal equilibrium with the surroundings, which are at 15EC. Determine the initial mass of air in tank A, the initial mass of air in tank B, and final air pressure in both tank.
    ANSWER: m_A=3.57 kg, m_B=2.30 kg, m_{total}=5.87 kg, p=323.3 kPa.
28. A 1-m^3 rigid tank (tank A) containing air at 25EC and 500 kPa is connected by a valve to another rigid tank (tank B) containing 5 kg of air at 35EC and 200 kPa. Now the valve is opened and the air is allowed to reach thermal equilibrium with the surroundings, which are at 20EC. Determine the initial mass of air in tank A, the initial volume of air in tank B, and final air pressure in both tank.
    ANSWER: m_A=5.85 kg, V_B= 2.21 m^3, m_{total}=10.85 kg, p=284.1 kPa.
29. The air in an automobile tire with a volume of 0.5 ft^3 is at 100EF and 20 psig. Determine the amount of air that must be added to raise the pressure to the recommended value of 30 psig. Assume the atmospheric pressure to be 14.7 psia and the temperature and the volume to remain constant.
    ANSWER: $m_{initial}$=0.0838 kg, m_{final}=0.1079 kg, m_{added}=0.0241 kg.
30. A rigid tank contains 20 lbm of air at 20 psia and 70EF. More air is added to the tank until the pressure and temperature rise to 35 psia and 90EF, respectively. Determine the volume of the tank, the final mass of air in the tank, the amount of air added.
    ANSWER: V=196 ft^3, m_{final}=33.73 lbm, m_{added}=13.73 lbm.
31. Find the enthalpy and internal energy of air at 2 bar and 300 K, at 4 bar and 400 K, at 10 bar and 400 K and at 20 bar and 400 K.

ANSWER: (215 kJ/kg, 301 kJ/kg), (286.7 kJ/kg, 401.4 kJ/kg), (286.7 kJ/kg, 401.4 kJ/kg), (286.7 kJ/kg, 401.4 kJ/kg).

32. Find the enthalpy and internal energy of air at 14.7 psia and 80EF, at 14.7 psia and 300EF, at 50 psia and 300EF, at 50 psia and 300EF, and at 50 psia and 300EF.
ANSWER: (92.39 Btu/lbm, 129.3 Btu/lbm), (130.0 Btu/lbm, 182.1 Btu/lbm), (130.0 Btu/lbm, 182.1 Btu/lbm), (130.0 Btu/lbm, 182.1 Btu/lbm), (130.0 Btu/lbm, 182.1 Btu/lbm).

2.4. REAL GASES

At high pressures, gases deviate considerably from ideal gas equation, pv=RT. A gas at a pressure much higher than its critical pressure and at a temperature much lower than its critical temperature is defined as a real gas. In other words, the further the state point of the gas is away from the critical point, the more nearly does the gas obey the ideal-gas law. To account for the deviation in properties p, v and T relationship, either more complex equations of state must be used, or a *compressibility factor* Z needs to be added.

The compressibility factor, Z, is defined as

$$Z=pv/RT \tag{2.4.1}$$

Z is a measure of the deviation of the real gas from the ideal gas. Note that for Z=1, the real gas becomes an ideal gas. Z is a function of p_R and T_R, where p_R and T_R are called *normalized reduced pressure* and *normalized reduced temperature*. $p_R$and T_R are defined as the real gas pressure and temperature with respect to their values at the critical point.

$$p_R=p/p_{critical} \tag{2.4.2}$$

and

$$T_R=T/T_{critical}. \tag{2.4.3}$$

Where $p_{critical}$ and $T_{critical}$.are the critical pressure and critical temperature of the gas, respectively.

The normalized reduced pressure and normalized reduced temperature are useful for establishing generalized correlations of the properties of real gases. Such correlations are based on the principle of corresponding states: All real gases, when compared at the same normalized reduced pressure and normalized reduced temperature, have nearly the same compressibility factor, and all deviate from ideal gas behavior to about the same degree.

An alternative expression for Z is

$$Z=1+B/v+C/v^2+D/v^3+E/v^4+.... \tag{2.4.4}$$

where the coefficients are called virial coefficients. The physical significance of the terms in the Z factor can be explained by microscopic physics. The term B/v accounts for the interactions between pairs of molecules; the term C/v^2 accounts for the three-body interactions of molecules; the term D/v^3 accounts for the four-body interactions of molecules;

the term E/v^4 accounts for the five-body interactions of molecules; etc. Since two-body interactions are many times more common than three-body interactions, three-body interactions are many times more common than four-body interactions, four-body interactions are many times more common than five-body interactions, etc., the contributions to Z of successively higher-ordered terms fall off rapidly.

If lines of constant T_R are plotted on a Z versus p_R diagram, a generalized compressibility chart can be obtained. This chart is applied to a number of gases, all of them very nearly coincide.

Tables of both compressibility factors and virial coefficients can be found in most traditional thermodynamic textbooks and engineering handbooks.

The ideal gas equation of state is very convenient to use in thermodynamic calculations. It is a very good approximation for gases at low density. Low and high are relative terms. How low is low is a relative question. It depends on the accuracy that we are looking for.

Note that the generalized compressibility chart and real gas equations are not programmed in CyclePad. For simplicity, we will consider real gases behave as ideal gases with a loss in accuracy.

Many semi-experimental equations including van der Waals equation, Beattie-Bridgman equation, Benedict-Webb-Rubin equation, Virial equation, etc. have been proposed to describe the p-v-T relations of real gases more accurately than does the equation of state of an ideal gas, pv=RT. For example, the van der Waals equation [Equation (2.4.1)] is derived from assumptions regarding molecular properties.

$$(P+a/v^2)(v-b)=RT \tag{2.4.5}$$

Where the quantities a and b are constants for one gas, but different constants for different gases. The term $(P+a/v^2)$ is the pressure effect by the intermolecular forces, and the term (v-b) is the volume effect by the volume occupied by the molecules.

Example 2.4.1.

Find the specific volume of R-134a at 1000 kPa and 323 K, using (A) the ideal-gas equation of state, (B) the real-gas equation of state with Z=0.84, and (C) the freon tableof CyclePad. The gas constant of R-134a is 0.0815 kPa(m^3)/[kg(K)].

Solution:

(A) v=RT/p=0.0815(323)/1000=0.02632 m^3/kg.
(B) v=ZRT/p=(0.84)0.0815(323)/1000=0.02211 m^3/kg.
(C) To find the specific volume from CyclePad, we take the following steps:

1. Build
   (A) Take a BEGIN and an END from the closed-system inventory shop and connect them.
   (B) Switch to analysis mode.
2. Analysis
   (A) Input the given information: (a) substance is R-134a, and (b) p=1 MPa and T=323 K.

3. Display results: The answer is v=0.0218 m^3/kg as shown in the following diagram.

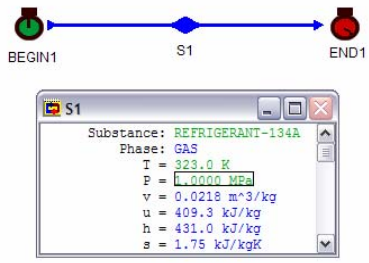

Figure E2.4.1. Specific volume of R-134a

Homework 2.4. Real gases

1. What is the difference between ideal gas and real gas?
2. Is a high density gas real gas or ideal gas?
3. What is compressibility factor, Z?
4. How do you explain the van der Waals equation in physical meaning?
5. What are the terms B/v, C/v^2, etc., in the compressibility factor account for?
6. Which term among B/v, C/v^2, etc., in the compressibility factor is the most important one, and why?
7. If Z=1, what are the molecular interactions in a real gas?

2.5. INCOMPRESSIBLE SUBSTANCES

Many liquids and solids are considered to be incompressible substances whose specific volume remains constant regardless of changes in other properties.

Several useful properties relationships (equations of state) of the incompressible substances are given in the following.

The difference between the constant-pressure specific heat and the constant-volume specific heat is zero. The subscripts are often dropped and the specific heat of an incompressible substances is simply designated by c:

$$c_p = c_v = c \tag{2.5.1}$$

The internal energy change, enthalpy change and entropy change of an incompressible substances depend on temperature changes only:

$$)u = Ic(dT) \tag{2.5.2}$$

$$)h = Ic(dT) \tag{2.5.3}$$

$$)s = Ic(dT)/T \tag{2.5.4}$$

For small temperature changes, the specific heat can be approximated as a constant. Equation (2.4.2) can be written as

$$u_2 - u_1 = c\,(T_2 - T_1) \tag{2.5.5}$$

$$)h =)u + v()p) \tag{2.5.6}$$

$$)s = s_2 - s_1 = c[\ln(T_2 / T_1)] \tag{2.5.7}$$

Water is the most widely used incompressible working fluid in engineering thermodynamic application. The heat capacity and specific volume of water at room temperature are c= 4.18 kJ/[kg(K)]=1.0 Btu/[lbm(R)] and v=0.0010 m^3/kg=0.0160 ft^3/lbm, respectively.

Example 2.5.1.

Find the change of properties (h, u, and v) of water from 14.7 psia and 42EF to 14.7 psia and 52EF using the Eqs. (2.5.5), (2.5.6) and (2.5.7).

Solution: Using the equations, we have $u_2 - u_1 = c(T_2 - T_1) = 1.0(52-42) = 10$ Btu/lbm

$)h =)u + v()p) = 10 + 0.0160(0) = 10$ Btu/lbm

$)s = s_2 - s_1 = c[\ln(T_2 / T_1)] = 1.0[\ln(460+52)/(460+42)] = 0.01972$ Btu/[lbm(R)].

Example 2.5.2.

Find the properties of water (incompressible substance) at (A) 20EC and 100 kPa, (B) 20EC and 5000 kPa, and (C) 30EC and 100 kPa using CyclePad.

To solve this problem by CyclePad, we take the following steps:

1. Build
   (A) Take a BEGIN and an END from the closed-system inventory shop and connect them.
   (B) Switch to analysis mode.
2. Analysis
   (A) Input the given information: (a) substance is water, and (b) 20EC and 100 kPa.
3. Display results

The answers are: (A) v=0.0010 m^3/kg, u=83.83 kJ/kg, h=83.93 kJ/kg, s=0.2962 kJ/[kg(K)]; (B) v=0.0010 m^3/kg, u=83.53 kJ/kg, h=88.52 kJ/kg, s=0.2951 kJ/[kg(K)]; and (C) v=0.0010 m^3/kg, u=125.7 kJ/kg, h=125.8 kJ/kg, s=0.4365 kJ/[kg(K)].

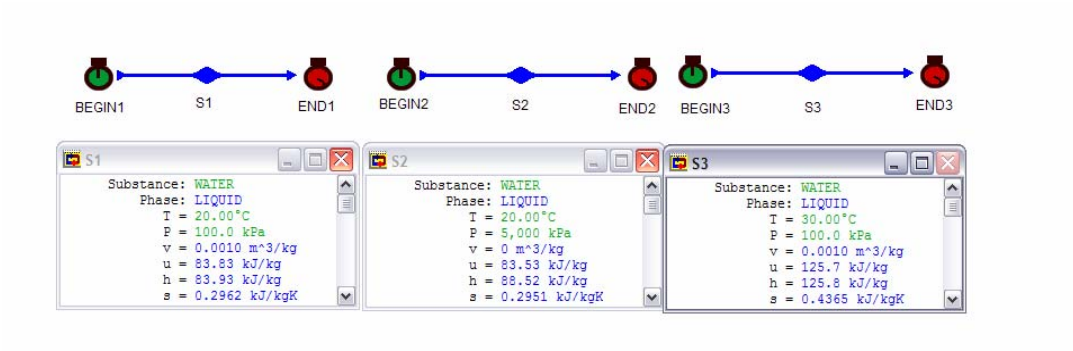

Figure E2.5.2. Compressed (Subcooled) Water properties

Comments: 1. v of incompressible substance is constant; 2. u of incompressible substance is a strong function of T and a weak function of p; 3. h of incompressible substance is a strong function of T and a weak function of p; and 4. h and u of incompressible substance are almost equal.

Example 2.5.3.

Find the change of properties (h, u, and v) of water from 14.7 psia and 42EF to 14.7 psia and 52EF using CyclePad.

To solve this problem by CyclePad, we take the following steps:

1. Build
   (A) Take a BEGIN, a combustor and an END from the closed-system inventory shop and connect them.
   (B) Switch to analysis mode.
2. Analysis
   (A) Input the given information: (a) substance is water, and (b) state 1 (input 14.7 psia and 42EF), and state 2 (input 14.70 psia and 52EF).
3. Display results

The answers are: The answers are:)v=0.00160-0.0160=0 ft^3/lbm)u=20.05-10.04=10.01 Btu/lbm,)h=20.09-10.08=10.01 Btu/lbm,)s=0.0399-0.0202=0.0197 Btu/[lbm(R)].

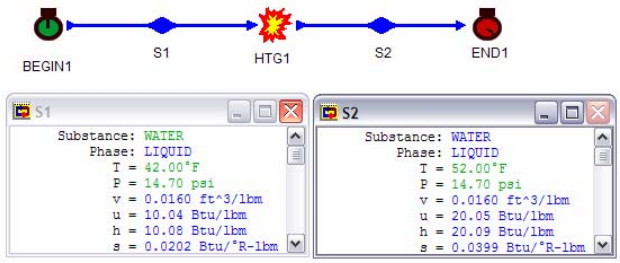

Figure E2.5.3. Compressed (Subcooled) water properties

Homework 2.5. Incompressible substances (Liquids and solids)

1. What is the difference between compressed liquid and saturated liquid?
2. Does internal energy of compressed liquid change with pressure significantly?
3. Does internal energy of compressed liquid change with temperature significantly?
4. In the absence of compressed liquid table, how do you find the specific volume and specific internal energy of refrigerant R-134a at 100 psia and 10EF without using CyclePad?
5. Water is compressed from 5 psia and 101.7 F to 600 psia and 101.8 F. Find the specific volume, specific internal energy and specific enthalpy of the water at each state.
   ANSWER: 0.0161ft^3/lbm u=69.71 Btu/lbm, h=69.73 Btu/lbm; 0.0161ft^3/lbm u=69.60 Btu/lbm, h=71.39 Btu/lbm.
6. Find the properties of water (incompressible substance) at (A) 15EC and 100 kPa, (B) 21EC and 5000 kPa, and (C) 33EC and 100 kPa using CyclePad.
   ANSWER: (A) 0.0161m^3/kg u=69.71 kJ/kg, h=69.73 kJ/kg, s=0.2242 kJ/[kg(K)]; (B) 0.0009998 m^3/kg, u=87.70 kJ/kg, h=92.69 kJ/kg, s=0.3092 kJ/[kg(K)]; (C) 0.010 m^3/kg, u=138.2 kJ/kg, h=138.3 kJ/kg, s=0.4776 kJ/[kg(K)].
7. Find the properties of water (incompressible substance) at (A) 35EF and 100 psia, (B) 81EF and 500 psia, and (C) 53EF and 14.7 psia using CyclePad.
   ANSWER: (A) 0.0160ft^3/lbm u=3.00 Btu/lbm, h=3.25 Btu/lbm, s=0.0061 Btu/[lbm(R)]; (B) 0.0161 ft^3/lbm u=48.91 Btu/lbm, h=50.39 Btu/lbm, s=0.0948 Btu/[lbm(R)]; (C) 0.0160 ft^3/lbm u=21.05 Btu/lbm, h=21.09 Btu/lbm, s=0.0419 Btu/[lbm(R)].
8. Find the properties (v, u, h, and s) of ammonia at (A) -32EC, 1000 kPa, (B) at -32EC, 500 kPa, and (C) at -32EC, 1500 kPa using CyclePad.
   ANSWER: (A) 0.00147m^3/kg, u=36.16 kJ/kg, h=34.69 kJ/kg, s=0.1462 kJ/[kg(K)]; (B) 0.00147 m^3/kg, u=35.71 kJ/kg, h=34.97 kJ/kg, s=0.1477 kJ/[kg(K)]; (C) 0.0015 m^3/kg, u=36.62 kJ/kg, h=34.42 kJ/kg, s=0.1448 kJ/[kg(K)].
9. Find the properties (v, u, h, and s) of methane at (A) -32EC, 1500 kPa, and (B) at -32EC, 500 kPa using CyclePad.
   ANSWER: (A) 0.0787m^3/kg, u=478.5 kJ/kg, h=478.6 kJ/kg, s=9.69 kJ/[kg(K)]; (B) 0.2454 m^3/kg, u=493.5 kJ/kg, h=493.6 kJ/kg, s=10.30 kJ/[kg(K)].

10. Find the properties (u, h, and s) of R-12 at (A) -32EC, 1500 kPa, and (B) at -32EC, 500 kPa using CyclePad.
    ANSWER: (A) u=7.65 kJ/kg, h=6.65 kJ/kg, s=0.0277 kJ/[kg(K)]; (B) u=7.25 kJ/kg, h=6.92 kJ/kg, s=0.0291 kJ/[kg(K)].
11. Find the properties (u, h, and s) of R-22 at (A) -32EC, 1500 kPa, and (B) at -32EC, 500 kPa using CyclePad.
    ANSWER: (A) u=9.08 kJ/kg, h=8.00 kJ/kg, s=0.0336 kJ/[kg(K)]; (B) u=8.70 kJ/kg, h=8.34 kJ/kg, s=0.0354 kJ/[kg(K)].
12. Find the properties (u, h, and s) of R-134a at (A) -32EC, 1500 kPa, and (B) at -32EC, 500 kPa using CyclePad.
    ANSWER: (A) u=159.3 kJ/kg, h=158.2 kJ/kg, s=0.8376 kJ/[kg(K)]; (B) u=158.8 kJ/kg, h=158.5 kJ/kg, s=0.8391 kJ/[kg(K)].

2.6. SUMMARY

There are three types of thermodynamic substances: pure substances, ideal gases and incompressible substances.

A pure substance has a fixed chemical composition throughout all different phases. The liquid and gas phases of the pure substances are important in thermodynamic application. The two phases are separated by a saturated mixture dome on a T-v diagram. The liquid region is called the compressed or subcooled liquid region. The gas region is called the superheated vapor region. The two phase mixture region is called saturated mixture region. Temperature and pressure are dependent in the saturated mixture region. Quality is defined as the vapor mass fraction of the saturated mixture, and is only defined in the saturated mixture region. Properties among T, p, v, u, h, and s relationships are determined and listed on conventional steam and refrigerant tables. In the case of compressed or subcooled liquid table is not available, a general approximation is to treat the compressed or subcooled liquid as a saturated liquid (x=0) at the given state temperature.

An ideal gas is a low density gas and follows the equation pv=RT. The pressure and temperature must be expressed as absolute quantities in the pv=RT equation. It is a fictitious substance but the simplest to use. Specific heats, u and h of ideal gases are functions of temperature only. Specific heats may be treated as constants over a small temperature range. Air and other gas tables, assuming variable specific heats are commercially available.

A real gas is a high density gas and follows the equation pv=ZRT.

Liquids and solids are considered as incompressible substances whose specific volumes are constant. Specific heat, u and h of incompressible substances are considered as functions of temperature only.

Properties of nine different thermodynamic substances including air and water are built in the software of CyclePad.

Chapter 3

FIRST LAW OF THERMODYNAMICS FOR CLOSED SYSTEMS

3.1. INTRODUCTION

A closed system is defined as a particular quantity of matter. The closed system always contains the same matter, and no matter crosses the system boundary. The mass of the closed system is constant. Although a closed system does not interact mass with its surroundings, it does interact energy with its surroundings.

Certain important energy forms cannot be stored within a system. They exist only in transit between the system and whatever interacts with the system. These forms are called transitory energy forms. Transitory energy is the energy entering or leaving a system without accompanying matter. It appears in two forms, microscopic as heat and macroscopic as work.

Homework 3.1. Introduction

1. What is a closed system? Is a non-flow system a closed system?
2. Can a closed system interact mass with its surroundings?
3. Can a closed system interact energy with its surroundings?
4. What are the two transitory energy forms?
5. Both work and flow energy can flow in to a system from its surroundings. What is the difference between work and flow energy?

3.2. WORK

If a system undergoes a displacement due to the application of a force, work is said to be done. The amount of work is equal to the product of the force and the component of the displacement in the direction of the force. Work is a macroscopic transitory energy; it is never contained in a body. Transitory energy is pure energy not associated with matter in transit between the system and its surroundings. Since a system does not possess work, work is not a property of the system.

In thermodynamics, interest lies in devices that do work. It thus has become customary to refer to work done by a system as positive. As a convention of sign, work input to a system is taken as negative, and work done by the system is positive. In this convention, positive work causes the energy of a thermodynamic system to decrease. The notation of work is W. Work is a form of energy, and therefore units for work are energy units.

Since work is not a property, the derivative of work is written as ∗W. The amount of work transferred to a system from the surroundings between an initial state i and a final state f is

$$\int *W = W_{if} . \tag{3.2.1}$$

rather than (W_f-W_i). There is no such thing as W_f or W_i.

Three commonly used units of work are ft-lbf and Btu in English unit system and kJ in SI unit system.

There are many modes of work. The two major work modes in thermodynamics are: simple compressible boundary work or simply boundary work, and shaft work. Neglecting other modes of work, the total work can be written as

$$W = W_{boundary} + W_{shaft} \tag{3.2.2}$$

Consider a system enclosed by a piston and cylinder. As the piston moves over a displacement distance dx in the direction of the driving force F acting on the piston, the boundary work done by this infinitesimal motion can be expressed as

$$W_{boundary} = F\ dx = (F/A)\ (Adx) = p\ dV. \tag{3.2.3}$$

A system whose work is represented by (p dV) is called simple compressible boundary work or boundary work. The boundary work can be evaluated as

$$W_{boundary} = I*W_{boundary} = Ip\ dV, \tag{3.2.4}$$

Where p is the driving force for the boundary work, and V is the displacement for the boundary work.

In order to integrate Eq. (3.2.4), the process or functional relations between p and V must be known. Using p and V as thermodynamic coordinates, the area underneath the process represents the boundary work of the process as illustrated by Fig. 3.2.1. Boundary work is therefore a path function. This can be easily seen by referring to a p-V diagram as shown by Fig. 3.2.2. In the process from the initial state i to the final state f, regardless of the path between i and f, the change in volume is (V_f -V_i) and change in pressure is (p_f -p_i); V and p are point functions and properties. The boundary work of the process 1-a-2 is greater than that of 1-b-2. Work is therefore clearly a path function and is not a property.

Similarly, the shaft work can be evaluated as

$$W_{shaft} = I*W_{shaft} = I\vartheta\ d2, \tag{3.2.5}$$

Where ϑ is the driving force for the shaft work, and 2 is the displacement for the shaft work.

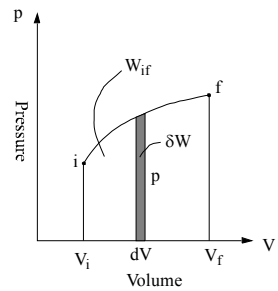

Fig. 3.2.1. p-V diagram

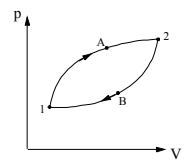

Fig. 3.2.2. Work of different processes on p-V diagram

Example 3.2.1.

A piston-cylinder device contains air at 150 kPa, 0.09043 m^3 and 200EC. Consider the air is the system, find the boundary work of the following processes and draw the processes on a p-V diagram:

(A) Heat is added to the air in a constant volume (isochoric) process until the temperature reaches 300EC. During this process the piston does not move.
(B) Heat is added in a constant pressure (isobaric) process until the volume is doubled.
(C) Air is expanded in a linear process until the pressure reaches 300 kPa and volume is doubled.

Solution:

(A) W=0. There is no area under the constant volume process, 1-2A.
(B) W=IpdV=pIdV=p (V_2-V_1)=150[2x 0.09043-0.09043]=13.56 kJ, which is the rectangular area under the constant volume process, 1-2B.
(C) The final volume and pressure are 0.1808 m^3 and 300 kPa. Since the process is a linear line, the average pressure is $p_{average}$=(150+300)/2=225 kPa. W=IpdV=$p_{average}$IdV=$p_{average}(V_2-V_1)$=225(0.1808-0.09043)=20.35 kJ, which is the triangle area under the process 1-2C, as shown in Figure E 3.2.1.

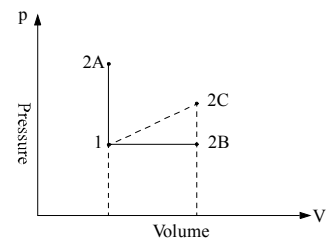

Figure E 3.2.1. Work of different processes on p-V diagram

Example 3.2.2.

A piston-cylinder device contains 0.1 kg of air at 150 kPa and 200EC. Consider the air is the system, find the boundary work of the following processes and draw the processes on a p-V diagram using CyclePad:

(A) Heat is added to the air in a constant volume (isochoric) process until the temperature reaches 300EC. During this process the piston does not move.
(B) Heat is added in a constant pressure (isobaric) process until the volume is doubled.
(C) Air is expanded in a constant temperature (isothermal) process until the volume is doubled.

To solve this problem by CyclePad, we take the following steps:

1. Build
   (A) Take a begin, a heating-combustion device in case (a) and case (b) or an expansion device in case (c), and an end from the closed-system inventory shop and connect them.

Switch to analysis mode.

2. Analysis
   (A) Assume the heating-combustion is isochoric in case (a) or isobaric in case (b).
   (B) Input the given information: (i) working fluid is air, (ii) the mass, initial air pressure and temperature of the process are 0.1 kg, 150 kPa and 200EC, (iii) the final air temperature of the process is 300EC in case (a), or the final specific volume is twice the initial specific volume in case (b) and case (c).
3. Display results
   (A) Display the expansion device results. The answers are: case (a) W=0 kJ, case (b) W=13.56 kJ, and case (c) W=9.40 kJ,

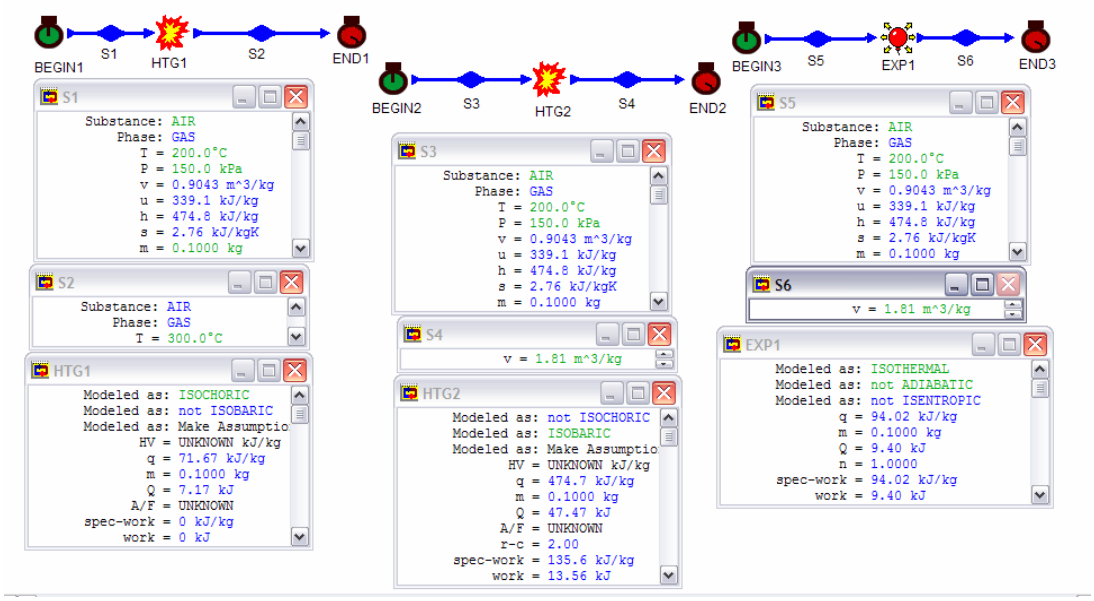

Figure E3.2.2. Work of different processes

Example 3.2.3.

A frictionless piston-cylinder device contains 2.4 kg of helium at 100 kPa and 300 K. Helium is now compressed adiabatically, slowly according to the relationship pV^n =constant until it reaches a final temperature and pressure of 400 K and 200 kPa. Find the work done during this process and n.

To solve this problem by CyclePad, we take the following steps:

1. Build
   (A) Take a begin, a compression device, and an end from the closed-system inventory shop and connect them.
   (B) Switch to analysis mode.
2. Analysis
   (A) Assume the compression as an adiabatic process.
   (B) Input the given information: (a) working fluid is helium, (b) the initial helium pressure and temperature of the process are 100 kPa and 300 K, (c) the final helium pressure and temperature of the process are 200 kPa and 400K.
3. Display results
   (A) Display the compression device results. The answers is W=-702.5 kJ and n=1.71.

Engineers frequently talk in terms of *power*. Power is defined as the work per unit time crossing the boundary of the system. The symbol for power is Wdot, where the dot notation is used to signify a rate quantity. The units of power are W, kW, MW, Btu/s, Btu/h, ft-lbf/s, horsepower, etc. For example, 500 kW is produced by a heat engine which removd 500 kJ of work in each second from the heat engine to its surroundings.

Wdot=∗W/dt=W/t (3.2.6)

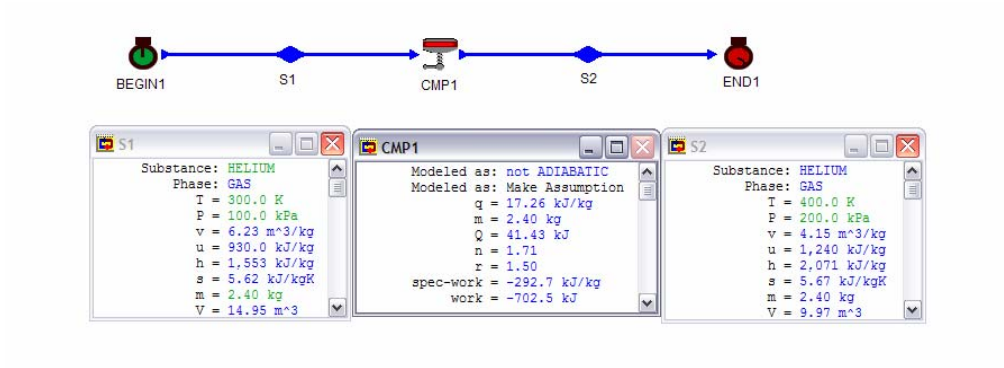

Figure E3.2.3. Polytropic process

Homework 3.2. Work

1. Is work a property?
2. Does a system possess work?
3. What are the two major modes of work in thermodynamics?
4. What is the driving force and its corresponding displacement of boundary work?
5. What is the driving force and its corresponding displacement of shaft work?
6. Under what condition is work equal to $p(V_2-V_1)$?
7. Stir a pail of water. What happens to the energy of water which you added work to it?
8. The term IpdV is the area under the process on a p-V diagram. How do you interpret this area.
9. Consider Ip dV, IV dp, and Id(pV). Which one is boundary work? Which one is a point function? Which one is a process function? Which one can be integrated without knowing the relation between p and V?
10. Write the equation of path for a constant volume process. Using the p-V diagram and show the work of a constant volume process is zero.
11. Write the equation of path for a constant pressure process. Using the p-V diagram and show the work of a constant pressure process can be obtained.
12. What is the difference between work and power?
13. A closed system consisting of an unknown gas undergoes a constant volume process from 1 Mpa to 6 Mpa. What is the boundary work done by the gas?
14. Is work added to or done by a closed system during an adiabatic expansion process?
15. Work is added to a 1 bar saturated liquid water at constant volume until its pressure becomes 11 bar compressed liquid. Show this process on a p-v diagram.
16. Carbon dioxide is compressed in a cylinder in a polytropical process $pV^{1.22}$=constant from p_1=100 kPa and V_1=0.004 m^3 to p_2=500 kPa. Compute the heat removed and work done or by the gas.
    ANSWER: -0.1478 kJ, -0.6122 kJ.

17. During a non-flow process 120 Btu of heat is removed from each lbm of the working substance while the internal energy of the working substance decreases by 85.5 Btu/lbm. Determine how much work is involved in the process and indicate whether the work is done on or done by the working substance.
    ANSWER: 34.5 Btu/lbm.
18. During a non-flow process 1200 kJ of heat is removed from each kg of the working substance while the internal energy of the working substance decreases by 65 kJ/kg from an initial internal energy of 165 kJ/kg. Determine how much work is involved in the process and indicate whether the work is done on or done by the working substance.
    ANSWER: -1135 kJ/kg.
19. Work is added to a 1 bar saturated liquid water at constant volume until its pressure becomes 11 bar compressed liquid. Show this process on a p-v diagram.
20. Carbon dioxide contained in a piston-cylinder device is compressed from 0.3 to 0.1 m^3. The initial pressure of the gas is 900 kPa. During the process, the pressure and volume are related by pV^2=constant. Find the final gas pressure and work on the gas during this process.
    ANSWER: p=8100 kPa, W=-540 kJ.
21. Air contained in a piston-cylinder device is compressed from 0.3 to 0.1 m^3. The initial pressure of the gas is 900 kPa. During the process, the pressure and volume are related by pV^3=constant. Find the final gas pressure and work on the gas during this process.
    ANSWER: p=24300 kPa, W=-1080 kJ.
22. Air contained in a piston-cylinder device is compressed from 0.3 to 0.1 m^3. The initial pressure of the gas is 900 kPa. During the process, the pressure and volume are related by $pV^{1.8}$=constant. Find the final gas pressure and work on the gas during this process.
    ANSWER: p=6502 kPa, W=-475.3 kJ.
23. Air contained in a piston-cylinder device is compressed from 0.3 to 0.1 m^3. The initial pressure of the gas is 900 kPa. During the process, the pressure and volume are related by $pV^{1.2}$=constant. Find the final gas pressure and work on the gas during this process.
    ANSWER: p=3363 kPa, W=-336.7 kJ.
24. A piston-cylinder device with a set of stops contains 10 kg of R-134a. Initially, 8 kg of the refrigerant is in the liquid form, and the temperature is -8EC. Now heat is transferred slowly to the refrigerant until the piston hits the stops, at which point the volume is 1000 L. Find the initial volume. Determine the temperature when the piston first hits the stops and the work during the expansion process.
    ANSWER: V=0.1529 m^3, T=-8EC, W=185.4 kJ.
25. A frictionless piston-cylinder device contains 2 kg of air at 100 kPa and 300 K. Air is now compressed slowly according to the relation $pV^{1.4}$=constant until it reaches a final temperature of 360 K. Determine the initial volume, final pressure, final volume, and work input during this process.
    ANSWER: V_1=1.72 m^3, p_2=189.3 kPa, V_2=1.09 m^3, W=-86.01 kJ.
26. A frictionless piston-cylinder device contains 2 kg of carbon dioxide at 100 kPa and 300 K. Air is now compressed slowly according to the relation $pV^{1.29}$=constant until

it reaches a final temperature of 360 K. Determine the initial volume, final pressure, final volume, and work input during this process.
ANSWER: V_1=1.13 m^3, p_2=225.0 kPa, V_2=0.6045 m^3, W=-78.17 kJ.

27. 2 kg of helium occupy a volume of 10 m^3 at 1300 K. Find the work necessary to halve the volume (A) at constant pressure, (B) at constant temperature. What is the temperature at the end of process (A)? What is the pressure at the end of process (B)? Find also the heat transfer in both cases.
ANSWER: W=-2700 kJ, -3743 kJ; T=650 K; p=1080 kPa; Q=-6730 kJ, -3743 kJ.
28. Air in an internal combustion engine undergoes an expansion process [$pv^{1.45}=p_1(v_1)^{1.45}=p_2(v_2)^{1.45}=c$] from an initial state at 0.007 ft^3, 2400 F and 2000 psia to a final state at 0.045 ft^3. Find the final air pressure and the specific work done by the air.
ANSWER: 134.7 psia, 246.8 Btu/lbm.
29. 10 lbm of air undergoes a constant pressure process from 88.2 psia and 70 F to 100 F. Determine q, w and ♠u for this process.
ANSWER: 7.19 Btu/lbm, 2.05 Btu/lbm, 5.14 Btu/lbm.
30. Air is compressed by a piston in a cylinder from 10 psia and 40 ft^3 to 20 psia. During the compression process, the product pV remains a constant. Determine the work done on the gas, the internal energy change of the gas and the heat transfer to the gas.
ANSWER: -51.31 Btu/lbm, 0, -51.31 Btu/lbm.

3.3. HEAT

Heat is defined as energy transferred across the boundaries of a system solely because of a temperature difference between the system and its surroundings. When two bodies at different temperatures are brought into contact, heat flows from the higher temperature body to the lower temperature body. This flow of heat ceases when thermal equilibrium between the two bodies is reached. Heat is a microscopic transitory quantity; it is never contained in a body. Heat is pure energy in transit between a system and its surroundings, not associated with matter. A system does not possess heat. Heat is not a property of the system.

As a convention of sign, heat input to a system is taken as positive, and heat leaving the system is negative. The notation of heat is Q.

Since heat is not a property, the derivative of heat is written as ∗Q. For a reversible process, the amount of heat transferred to a system from the surroundings between an initial state i and a final state f is Q_{if} rather than (Q_f-Q_i). There is no such thing as Q_f or Q_i.

$$I*Q = Q_{if} = IT\ dS \tag{3.3.1}$$

where temperature (T) is the driving force and entropy (S) is the displacement for the heat transfer.

Notice that Equation (3.3.1) for heat is similar to Equation (3.2.4) for boundary work.

Heat is a form of energy, and therefore units for heat are energy units. Two commonly used units of heat are Btu in English unit system and kJ in SI unit system.

Heat and work are the only energy forms that a system can give to or take from its surroundings without transferring matter. Heat and work change to some form of accumulated

energy as soon as it crosses the boundaries of a system, much as pedestrians change into passengers as soon as they enter a bus. Once energy has gotten into a system, it is impossible to tell whether the energy was transferred as heat or as work. The term "work of a system" and "heat of a system" are meaningless.

Homework 3.3. Heat

1. Is it correct to say that a system possesses 5 kJ of heat?
2. Can heat be added to a system during a constant temperature process?
3. What is the driving force and its corresponding displacement of heat?
4. Does a hot system describe a high value of heat, or a high value of temperature of the system?
5. Both heat and work represent transient forms of energy. Discuss the difference between them.
6. The term ITds is the area under the process on a T-s diagram. How do you interpret this area.
7. Block A and block B are at different temperatures ($T_A > T_B$). Five sides of each block are well insulated. The sides of each block that are not insulated are placed together. Keeping the definition of heat in mind, by prescribing the proper boundaries,
   (A) Select a system in such a manner that there is no transfer of heat
   (B) Select a system that receives energy by the mode of heat
   (C) Select a system that rejects energy by the mode of heat
8. A closed system receives 100 kJ of energy from its surroundings. Is this energy transferred by the mode of heat or by the mode of work?
9. Indicate whether the following statements are true or false:
   (A) Work is a property.
   (B) Work from a state 1 to state 2 depends on the path of the system.
   (C) Heat is a property.
   (D) In an expansion process the work is positive.
   (E) Equilibrium is a state that cannot be changed.
   (F) The product of pressure and volume is a property.
   (G) The heat interaction in an isothermal process is zero.
   (H) Work in an adiabatic process is zero.
   (I) When a gas is being compressed in an adiabatic cylinder its energy decreases.
   (J) In a cycle where the net work is positive, the energy of the system decreases.
10. Explain the difference between internal energy and heat.
11. Explain the difference between work and heat.
12. Under what condition is heat equal to $T(S_2-S_1)$?
13. Is it possible to decrease the temperature of a substance, such as a gas, without remove heat from the substance?
14. Heat is removed from a superheated steam vapor at constant volume until liquid just begins to form. Show this process on a p-v diagram, and on a p-T diagram.
15. Heat is added to a 400 K saturated liquid water at constant pressure until its temperature reaches 500 K. Find the amount of heat added per unit mass. Show this process on a p-v diagram, a p-T diagram, and on a T-s diagram.

ANSWER: q=2399 kJ/kg.

16. Heat is removed from steam at its critical point at constant volume until the pressure is 100 kPa. Show this process on a p-v diagram.
17. Heat is added to a compressed liquid water at constant pressure until it becomes saturated liquid. Show this process on a p-v diagram.
18. Indicate whether the following statements are true or false:
    (A) Work is a property.
    (B) Work from a state 1 to state 2 depends on the path of the system.
    (C) Heat is a property.
    (D) In an expansion process the work is positive.
    (E) Equilibrium is a state that cannot be changed.
    (F) The product of pressure and volume is a property.
    (G) The heat interaction in an isothermal process is zero.
    (H) Work in an adiabatic process is zero.
    (I) When a gas is being compressed in an adiabatic cylinder its energy decreases.

3.4. FIRST LAW OF THERMODYNAMICS FOR A CLOSED SYSTEM

The energy (E) content of a closed system may be changed by heat (Q) or work (W) or both from its surroundings without mass transfer. Let the initial energy content of a closed system at time t_1 be E_1; the final energy content of a closed system at time t_2 be E_2; Heat added to the system during the time interval from t_1 to t_2 is Q_{12}; and work added to the system during the time interval from t_1 to t_2 is W_{12}. Applying the energy conservation to the closed system under these conditions, it becomes

$$E_2 - E_1 = Q_{12} - W_{12} \tag{3.4.1}$$

Equation (3.4.1) is the First law of thermodynamics for a closed system. In using Equation (3.4.1), we must always remember the important sign convention that we have adopted for heat and work. Heat added to the system is positive and work added to the system is negative. We must also always remember the important subscripts 1 and 2 convention that we have adopted on Equation (3.4.1). 1 refers to time 1 (t_1) and 2 refers to time 2 (t_2).

The First law of thermodynamics for a closed system [Equation (3.4.1)] expressed in words is

[time change of the energy contained within the closed system] = [net heat added to the system] - [net work added to the system]

Various special forms of the First law of thermodynamics for a closed system can be written. For example

$$e_2 - e_1 = q_{12} - w_{12} \tag{3.4.2}$$

Where e is the specific energy, q is heat per unit mass and w is work per unit mass.

Equation (3.4.2) is the specific form of Equation (3.4.1), where e=E/m, q=Q/m and w=W/m, respectively.

IdE=ĮQ-ĮW (3.4.3)

Ide=Įq-Įw (3.4.4)

Equation (3.4.3) and Equation (3.4.4) are the integral forms of Equation (3.4.1) and Equation (3.4.2).

dE=̣Q-̣W (3.4.5)

de=̣q-̣w (3.4.6)

Equation (3.4.5) and Equation (3.4.6) are the differential forms of Equation (3.4.1) and Equation (3.4.2).

̣E/̣t=Q12/̣t-W12/̣t (3.4.7)

̣e/̣t=q12/̣t-w12/̣t (3.4.8)

Equation (3.4.7) and Equation (3.4.8) are the finite forms of Equation (3.4.1) and Equation (3.4.2), where ̣E=E2 -E1, ̣e=e2 -e1, and ̣t=t2 -t1, respectively.

dE/dt=Qdot-Wdot (3.4.9)

de/dt=qdot-wdot (3.4.10)

Equation (3.4.9) and Equation (3.4.10) are the time rate forms of Equation (3.4.1) and Equation (3.4.2). The time rate of the First law of thermodynamics for a closed system [Equation (3.4.9)] expressed in words is

[time rate of change of the energy contained within the closed system at time t] = [net rate of heat added to the system at time t] - [net rate of work added to the system at time t]

Example 3.4.1.

6 Btu of heat is added to 2 lbm of copper. Neglect the kinetic and potential energy change, find the change in internal Energy.

Solution: The copper is an incompressible substance with constant volume. Applying the definition of boundary work and the first law of thermodynamics for a closed system, we have

W =Ip dV=0

and

)E=)U=Q-W=6-0=6 Btu.

Example 3.4.2.

1 kg of helium initially at 101.3 kPa and 20EC is contained within a cylinder and piston setup. The helium undergoes an isobaric heating process. The volume of the helium is doubled at the end of this process. Determine (A) the work done by the helium, (B) volume change, enthalpy change, entropy change, and internal energy change of the helium. Ignore the kinetic and potential energy changes.

To solve this problem by CyclePad, we take the following steps:

1. Build
   (A) Take a begin, a heating-combustion device, and an end from the closed-system inventory shop and connect them.
   (B) Switch to analysis mode.
2. Analysis
   (A) Assume the heating-combustion is isobaric.
   (B) Input the given information: (i) working fluid is helium, (ii) the helium mass, initial pressure and temperature of the process are 0.1 kg, 101.3 kPa and 20EC, (iii) the final specific volume is twice the initial specific volume.
3. Display results

The answers are: (A) w=608.8 kJ ; (B))v=12.02-6.01=6.01m^3,)h=3035-1518=1517 kJ,)s=9.06-5.47=3.59 kJ/[kg(K)]. and)u=1817-908.7=908.3 kJ.

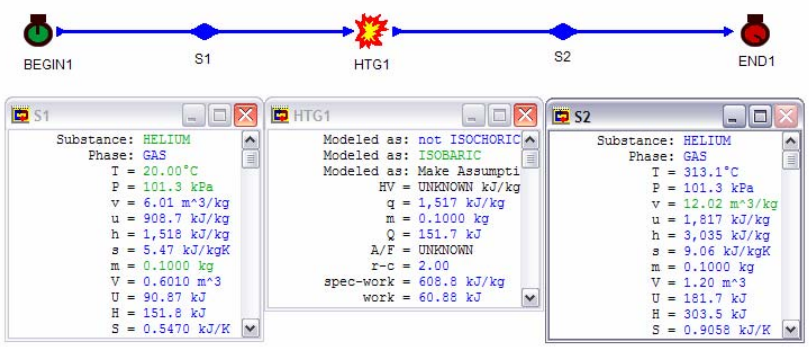

Figure E3.4.2. Isobaric process

Homework 3.4. First Law of Thermodynamics for a Closed System

1. Can changes of state occur within a closed system without heat or work added?
2. Can changes of volume occur within a closed system without work added or removed?
3. A combustion by burning a mixture of gasoline and air in a constant-volume cylinder-piston assembly surrounded by a water bath. During the combustion, the

temperature of the water is observed to rise. Considering the gasoline and air as the system:
(A) Has work been done?
(B) Has heat been transferred?
(C) What is the sign of internal energy change?

4. A liquid is stirred in a well-insulted container and undergoes a rise in temperature. Considering the liquid as the system:
(A) Has work been done?
(B) Has heat been transferred?
(C) What is the sign of internal energy change?
5. An adiabatic vessel with rigid walls is divided into two parts by a partition. One part contains a gas, and the other is evacuated. Considering the vessel is the system, if the partition is broken, find:
(A) Has work been done?
(B) Has heat been transferred?
(C) What is the sign of internal energy change?
6. An adiabatic vessel with rigid walls is divided into two parts by a partition. One part contains air at 200 kPa and 300 K, and the other contains air at 100 kPa and 290 K. Considering the vessel is the system, if the partition is broken, find:
(A) Has work been done?
(B) Has heat been transferred?
(C) What is the sign of internal energy change?
7. Fill in the missing data for each of the following processes of a closed system between the initial state and final state. ()$E=E_{final}-E_{initial}$)
(A) (A). Q=18 kJ, W=6 kJ,)U=?, U_{final}=34 kJ.
(B) (B). Q=? kJ, W=25 kJ,)U=18 kJ.
(C) (C). Q=44 kJ, W=?,)U=18 kJ.
(D) (D). Q=?, W=12 kJ,)U=0 kJ.
ANSWER: (A) 46 kJ, (B) 43 kJ, (C) 26 kJ, (D) 12 kJ.
8. 100 pounds of nitrogen undergoes a process. The internal energy at the start of the process is 9000 Btu/lbm and at the completion of the process is 15000 Btu/lbm. A total of 350 Btu of work is done on the gas. How much heat was added or subtracted from each pound of the gas?
ANSWER: 5650 Btu.
9. Determine the change in specific internal energy for nitrogen contained in a closed tank while 12 Btu/lbm of heat and 7.64 Btu/lbm of work are added to the gas.
ANSWER: 19.64 Btu/lbm.
10. The final internal energy of nitrogen contained in a closed tank is 600 Btu/lbm. 200 Btu/lbm of heat was removed from the gas and 100 Btu/lbm of work is done on the gas. What is the initial internal energy?
ANSWER: 900 Btu/lbm.
11. The internal energy of water at the start of a process is 1300 Btu/lbm. During the process 50 Btu/lbm of heat is added to the water and 10 Btu of work is performed by the water. Determine the final internal energy of the water.
ANSWER: 1340 Btu/lbm.

12. A rigid tank having a volume of 1 m^3 contains 0.01 m^3 of saturated liquid water and 0.99 m^3 of saturated vapor at 14.7 psia. Heat is transferred to the contents of the tank until the liquid water has just evaporated. How much heat must be added?
13. A closed rigid vessel of 1 m^3 capacity is filled with saturated steam at 300 kPa. If subsequently, 20% of steam is condensed, how much heat must be removed and what is the final pressure?
14. (A) One pound mass of steam is confined in a cylinder by a piston at 100 psia and 900 R. Calculate the work done by the steam if it is allowed to expand isothermally to 40 psia.
    (B) One pound mass of steam is confined in a cylinder by a piston at 100 psia and 900 R. Calculate the work done by the steam if it is allowed to expand adibatically to 40 psia.
    (C) Explain the difference between the work values obtained in (A) and (B).

3.5. FIRST LAW OF THERMODYNAMICS FOR A CLOSED SYSTEM APPLY TO CYCLES

Let a closed system operate in a cycle consisting of three processes 1-2, 2-3, and 3-1as shown in Figure 3.5.1.

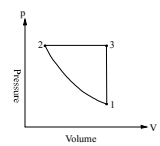

Figure 3.5.1. cycle

The initial state (1) of the cycle is the same as the finite state (also 1). Applying Equation (3.4.1) to the three processes 1-2, 2-3, and 3-1, we have

$$E_2 - E_1 = Q_{12} - W_{12} \tag{3.5.1}$$

$$E_3 - E_2 = Q_{23} - W_{23} \tag{3.5.2}$$

and

$$E_1 - E_3 = Q_{31} - W_{31} \tag{3.5.3}$$

For the cycle, which consists of three processes 1-2, 2-3, and 3-1, we have

$$I_{Cycle} dE = (E_2 - E_1) + (E_2 - E_1) + (E_2 - E_1) = 0 \tag{3.5.4}$$

$$I_{Cycle} * Q = Q_{12} + Q_{23} + Q_{31} = Q_{net} \tag{3.5.5}$$

$$I_{Cycle} * W = W_{12}+W_{23}+W_{31} = W_{net} \quad (3.5.6)$$

Applying Equation (3.4.3) yields

$$I_{Cycle} * Q = I_{Cycle} * W \quad (3.5.7)$$

or

$$Q_{12}+Q_{23}+Q_{31}=W_{12}+W_{23}+W_{31}, \text{ or } Q_{net}=W_{net} \quad (3.5.8)$$

where I_{Cycle} is the summation around the cycle, $I_{Cycle} * Q$ is the net heat added to the cycle and $I_{Cycle} * W$ is the net work produced by the cycle, respectively.

In words, Equation (3.5.7) states that in a cycle the net heat addition to the cycle is equal to the net work removed from the cycle.

Example 3.5.1.

An inventor claims to have developed a work-producing closed system cycle which receives 2000 kJ of heat from a heat source and rejects 800 kJ of heat to a heat sink. It produces a net work of 1200 kJ. How do we evaluate his claim?

Solution: Let us check if the First law of thermodynamics for a closed system cycle is satisfied or not.

$$I_{Cycle} * Q = Q_{net} = +2000+(-800)=1200 \text{ kJ}$$

$$I_{Cycle} * W = W_{net} = +1200 \text{ kJ}$$

Since $W_{net}=Q_{net}$, the claim is valid as far as the First law of thermodynamics is concerned.

Homework 3.5. First Law of Thermodynamics for a Closed System Apply to Cycles

1. What is the change of temperature (or any property) of a cycle?
2. Is it possible that the net heat added to a cycle is negative?
3. An inventor claims to have developed a heat-producing closed system cycle which receives 2000 kJ of heat from a low-temperature heat source and rejects 3200 kJ of heat to a high-temperature heat sink. It consumes a net work of 1200 kJ. How do we evaluate his claim?

3.6. Closed System for Various Processes

Processes encountered in engineering are of many varieties. It is necessary for one to acquire the ability to analyze simple processes before one can acquire the ability to analyze

complex and multi-processes. In this chapter, we shall apply the fundamental first law of thermodynamics to the study of several common types of closed system processes.

For a closed system process, the mass is constant. Without shaft work, the boundary work and the First law of thermodynamics of the closed system for a process are:

$$W_{12} = IpdV \tag{3.6.1}$$

and

$$Q_{12} - W_{12} = E_2 - E_1 \tag{3.6.2}$$

In many engineering applications, the kinetic energy change and potential energy change can be neglected. Eq. (3.6.2) is reduced to

$$Q_{12} - W_{12} = U_2 - U_1 \tag{3.6.3}$$

It will be seen that although the basic principles are identical for all processes, the analyses will depend on the kind of working substance involved and the state properties.

3.6.1. Constant Volume (Isochoric or Isometric) Process

If the volume of a process is constant, it is called *isochoric* or *isometric* process. The final volume (or specific volume) of the process is the same as its initial volume (or specific volume). Without shaft work, the boundary work and the First law of thermodynamics of the closed system for the constant volume process are:

$$W_{12} = IpdV=0, \qquad (3.6..1.1)$$

and

$$Q_{12} = U_2 - U_1 \qquad (3.6.1.2)$$

That is, the quantity of heat added to a system is equal to the change of the internal energy of the system.

Example 3.6.1.1.

The radiator (rigid-tank closed system) of a steam heating system has a mass of 0.02 kg and is filled with superheated vapor at 300 kPa and 280EC. At this moment both the inlet and exit valves to the radiator are closed. Determine (A) the final temperature and quality of the steam, (B) the change of internal energy and entropy, and (C) the amount of work and heat that will be transferred to the room when the steam pressure drops to 100 kPa.

To solve this problem by CyclePad, we take the following steps:

1. Build

(A) Take a begin, a cooler, and an end from the closed-system inventory shop and connect them.
(B) Switch to analysis mode.

2. Analysis
   (A) Assume the cooler as a isochoric process, W=0.
   (B) Input the given information: (a) working fluid is water, (b) the initial water pressure and temperature of the process are 300 kPa and 280EC, and (c) the final water pressure of the process is 100 kPa .
3. Display results

The answers are: (A) T=99.63EC and x=0.4977; (B))u=1457-2775=-1318 kJ/kg and)s=4.32-7.63=-3.31 kJ/[kg(K)]; (C) W=0 and Q=-26.36 kJ.

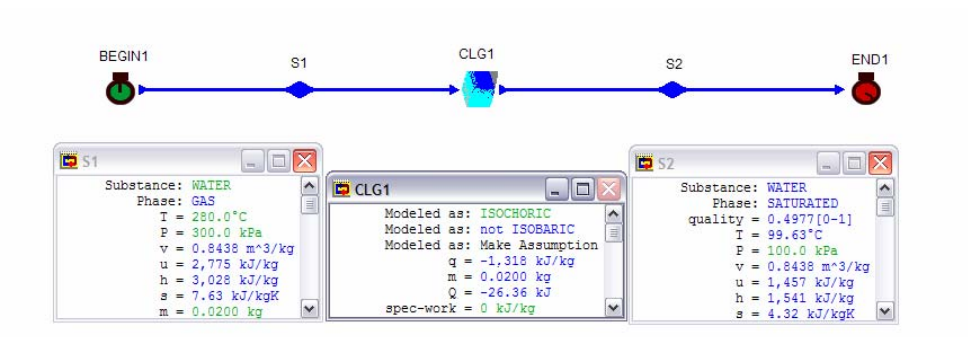

Figure E3.6.1.1. Isobaric cooling

Example 3.6.1.2.

A rigid tank contains 3 lbm of air at 50 psia and 70EF. The air is now cooled until its pressure is reduced to 25 psia. Determine (A) the initial specific volume of the air, (B) the final temperature of the air, (C) the change of internal energy and entropy, and (D) the amount of work and heat.

To solve this problem by CyclePad, we take the following steps:

1. Build
   (A) Take a begin, a cooler, and an end from the closed-system inventory shop and connect them.
   (B) Switch to analysis mode.
2. Analysis
   (A) Assume the cooler as an isochoric process.
   (B) Input the given information: (a) working fluid is air, (b) the initial air mass, pressure and temperature of the process are 3 lbm, 50 psia and 70EF, and (c) the final air pressure of the process is 25 psia.
3. Display results

The answers are: (A) v=3.92 ft^3/lbm; (B) T=-194.8 EF; (C))u=45.34-90.67=-45.33 Btu/lbm, and)s=0.3706-0.4893=-0.1187 Btu/[lbm(R)]; (D) W=0 and Q=-136 kJ.

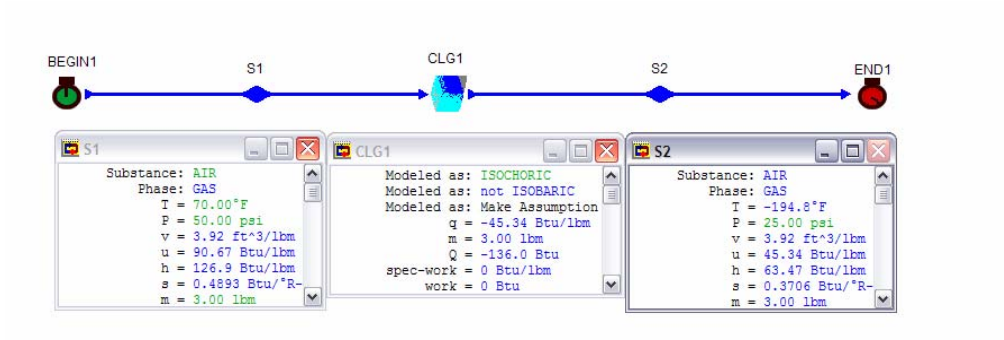

Figure E3.6.1.2. Constant volume process

Homework 3.6.1. Constant Volume

1. A rigid, closed vessel contains 2 lbm of steam initially at 100 psia, 350EF. It is cooled to 200EF. What is the size of the vessel? Determine the amount of heat transferred to the vessel.
   ANSWER: 9.20 ft^3, -1468 Btu.
2. Saturated steam vapor (x=1) at 14.7 psia is contained inside a rigid vessel having a volume of 50 ft^3. Heat is removed until the temperature drops to 180 F. Find the amount of heat removed, work added, and the quality at the final state.
   ANSWER: -817.7 Btu, 0, 0.5334.
3. A 5 m^3 rigid tank contains a quality 0.05745 steam (0.05 m^3 of saturated liquid water and 4.95 m^3 of saturated water vapor) at 0.1 Mpa. Heat is transferred until the pressure reaches 150 kPa. Determine the initial amount of water in the system, final quality of the steam, and heat transfer added to the system.
   ANSWER: 50.85 kg, 0.084, 5186 kJ.
4. A closed rigid vessel contains 1.5 lbm of liquid water and 1.5 lbm of water vapor at 100 psia. Heat added to the mixture causes the H_2O to reach a pressure of 300 psia. Determine the final temperature of the H_2O, work and heat added during this process.
   ANSWER: 682.5EF, 0, 1606 Btu.
5. One kg of air at 350 kPa is confined to a 0.2 m^3 rigid tank. If 120 kJ of heat are supplied to the gas, the temperature increases to 411.5EC. Find (A) the work done, (B) the heat added, and (C) the final pressure and temperature of the air.
   ANSWER: (A) 0, (B) 120 kJ, (C) 590 kPa, 138.4EF.

3.6.2. Constant Pressure (Isobaric) Process

If the pressure of a process is constant, it is called *isobaric* process. The final pressure of the process is the same as its initial pressure. Without shaft work, the boundary work and the First law of thermodynamics of the closed system for the constant pressure process 1-2 are:

$$W_{12} = IpdV= p(V_2 -V_1), \quad (3.6.2.1)$$

and

$$Q_{12} = W_{12} + U_2 - U_1 = H_2 - H_1 \quad (3.6.2.2)$$

Thus the heat added in a reversible constant pressure process is equal to the increase of enthalpy, whereas it was equal to the increase of internal energy in the reversible constant volume process.

Example 3.6.2.1.

0.005 kg of air contained inside a piston-cylinder set up is initially at 128EC and 900 kPa. Heat is added at a constant pressure until its volume is doubled. Determine (A) the final temperature of the air, (B) the change of internal energy and entropy, and (C) the amount of work and heat.

To solve this problem by CyclePad, we take the following steps:

1. Build
   (A) Take a begin, a heater, and an end from the closed-system inventory shop and connect them.
   (B) Switch to analysis mode.
2. Analysis
   (A) Input the given information: (a) the process is isobaric, (b) working fluid is air and mass is 0.005 kg,, and (c) the initial temperature and pressure of the process are 128EC and 900 kPa.
3. Display results

The answers are: (A) T=529.3EC; (B))u=575.1-287.5=287.6 kJ/kg and)s=2.78-2.08=0.70 kJ/[kg(K)]; (C) W=0.5752 kJ and Q=2.01 kJ.

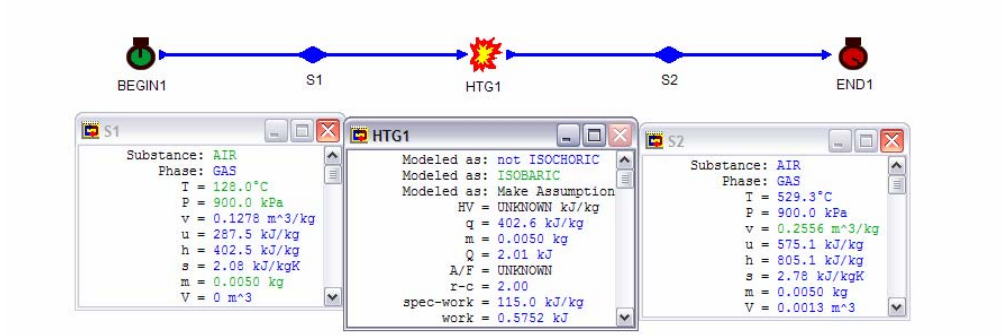

Figure E3.6.2.1. Constant pressure process

Homework 3.6.2. Isobaric Process

1. 50 Btu's of heat are added to 1 lbm of air during an isobaric process with a pressure of 15 psia starting at a temperature of 100EF. Find the (A) final temperature and (B) work done.
   ANSWER: 308.6EF, 14.29 Btu.
2. Half pound of CO_2 undergoes an isobaric process with a pressure of 50 psia while the volume increases from 4 ft^3 to 8 ft^3. Find the work done and heat added.
   ANSWER: 16.10 Btu, 49.39 Btu.
3. Air at 100 kPa, 27EC occupies a 0.01 m^3 piston-cylinder device that is arranged to maintain constant air pressure. This device is now heated until its volume is doubled. Determine the heat transfer to the air and work produced by the air.
   ANSWER: 3.50 kJ, 1.0 kJ.
4. A cylinder fitted with a piston has an initial volume of 0.1 m^3 and contains 0.1618 kg of air at 150 kPa, 50EC. The piston is moved, expanding the air isobarically (constant pressure) until the temperature is 150EC. Determine work added, and heat added during this process.
   ANSWER: 0.4642 kJ, 1.62 kJ.
5. A closed system holds a mixture of 1 kg of liquid water and 1 kg of water vapor at 700 kPa. Determine (A) the initial temperature, and (B) Heat transfer to the content occurs until the temperature reaches 360EC. The pressure is maintained constant during the process. (C) Determine the work and heat added to the system.
   ANSWER: (A) 165EC, (B) 2908 kJ, (C) 385.9 kJ.
6. 0.1 kg of air is expanded from 3 m^3 to 8 m^3 in an isobaric process with a constant pressure of 200 kPa. How much heat is added and work is done by the gas?
   ANSWER: 3500 kJ, 1000 kJ.
7. Five pounds of CO_2 is compressed in a piston-cylinder setup from a volume of 23 ft^3 to a volume of 13 ft^3. During the process the pressure remains constant at 20 psia. What is the work done and heat transferred?
   ANSWER: -37.01 Btu, -164.6 Btu.

3.6.3. Constant Temperature (Isothermal) Process

If the temperature of a process is constant, it is called *isothermal*. When the quantities of heat and work are so proportioned during an expansion or compression, the final temperature of the process is the same as its initial temperature. The First law of thermodynamics of the closed system for the constant temperature process 1-2 are:

$$Q_{12} - W_{12} = U_2 - U_1 \qquad (3.6.3.1)$$

For an ideal gas, $U_2 - U_1 = 0$. Therefore $Q_{12} = W_{12}$ for the isothermal process.

Example 3.6.3.1.

A piston-cylinder device contains 0.1 m^3 of carbon dioxide at 100 kPa and 85EC. The carbon dioxide is compressed isothermally until the volume becomes 0.01 m^3. Determine (A) the final pressure of the carbon dioxide, (B) the change of internal energy and entropy, and (C) the amount of work and heat.

To solve this problem by CyclePad, we take the following steps:

1. Build
   (A) Take a begin, a compressor, and an end from the closed-system inventory shop and connect them.
   (B) Switch to analysis mode.
2. Analysis
   (A) Input the given information: (a) the process is isothermal, (b) working fluid is carbon dioxide, (c) the initial volume, temperature and pressure of the process are 0.1 m^3, 85EC and 100 kPa, and (d) the final volume is 0.01 m^3.
3. Display results

The answers are: (A) p=1000 kPa; (B))u=233.3-233.3=0 kJ/kg and)s=2.33-2.77=-0.44 kJ/[kg(K)]; (C) W=-23.03 kJ and Q=-23.03 kJ.

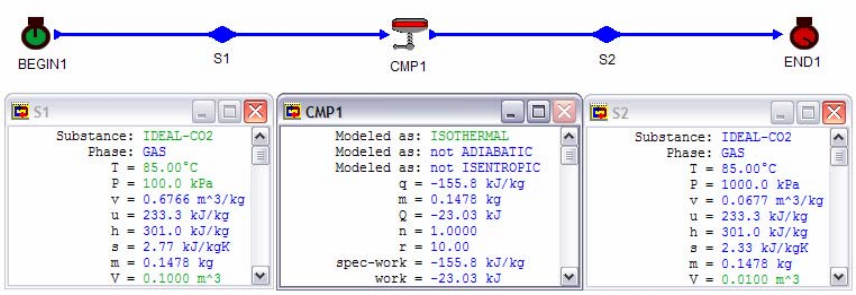

Figure E3.6.3.1. Isothermal process

Homework 3.6.3. Constant Temperature Process

1. 0.25 lbm of air is compressed by a piston in a cylinder from 10 psia and 40 ft^3 to 20 psia. During the compression process, the product pV remains a constant. Determine the work done on the gas, and the heat transfer to the gas.
   ANSWER: -51.31 Btu, -51.31 Btu.
2. 1.2 kg of air occupying a volume of 0.2 m^3 at a pressure of 1.5 Mpa is heated and expands isothermally (T=c) to a volume of 0.5 m^3. Find the work added and heat added during this process.
   ANSWER: 274.9 kJ, 274.9 kJ.
3. 3 ft^3 of air are expanded in a piston-cylinder setup from 700 psia and 2900EF to a final volume of 6 ft^3. Assuming the process is isothermal, determine the heat transferred and work done.
   ANSWER: 269.4 Btu, 269.4 Btu.
4. 2 kg of helium occupy a volume of 10 m^3 at 1300 K. Find the work necessary to halve the volume (A) at constant pressure, (B) at constant temperature. What is the temperature at the end of process (A)? What is the pressure at the end of process (B)? Find also the heat transfer in both cases.
   ANSWER: W=-2700 kJ, -3743 kJ; T=650 K; p=1080 kPa; Q=-6730 kJ, -3743 kJ.

3.6.4. Adiabatic Process

The term adiabatic is used to describe any process during which heat is prevented from crossing the boundary of the system. If a process is adiabatic, the heat transfer to the system is equal to zero. For example, a process taking place in a well-insulated container can be considered adiabatic. The adiabatic process may be reversible or irreversible.

$$Q_{12} = 0, \tag{3.6.14.1}$$

The First law of thermodynamics of the closed system for the adiabatic process 1-2 is:

$$-W_{12} = U_2 - U_1 \tag{3.6.4.2}$$

In an adiabatic expansion, work is done by the system at the expense of its internal energy; in an adiabatic compression, the internal energy is increased by an amount equal to work done on the system.

Since heat transfer in practice requires some time, a very rapid process may be treated as adiabatic, although it would not be quasi-static. Insulation placed on the boundary of a system will also result in a reduction in heat transfer between the system and its surroundings, thus approximating the adiabatic boundary.

An adiabatic process is an idealization. Since there is a heat transfer with any temperature difference between a system and its surroundings. However, such idealization is of immense use in the analyses of theoretical cycles for power generation, heat pump, and refrigeration.

Example 3.6.4.1.

A frictionless piston-cylinder device contains 2 kg of air at 100 kPa and 290K. Air is now compressed adiabatically to 1800 kPa and 662.3 K. Find the work added to the device.

To solve this problem by CyclePad, we take the following steps:

1. Build
   (A) Take a begin, a compression device, and an end from the closed-system inventory shop and connect them.
   (B) Switch to analysis mode.
2. Analysis
   (A) Expansion device
   (B) Assume the compression as an adiabatic process.
   (C) Input the given information: (a) working fluid is air, (b) the initial air mass, pressure and temperature of the process are 2 kg, 100 kPa and 290K, and (c) the final air pressure and temperature of the process are 1800 kPa and 662.3 K.
3. Display results

The answers is Q=0 kJ, and W=-533.7 kJ.

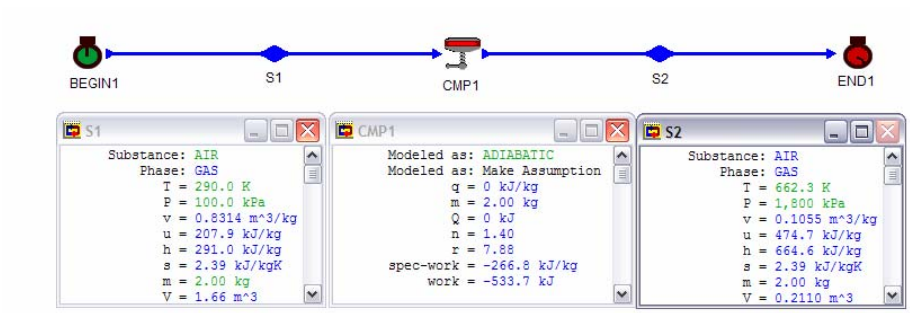

Figure E3.6.4.1. Adiabatic process

Example 3.6.4.2.

A frictionless piston-cylinder device contains 5 lbm of air at 14.7 psia and 80EF. Air is now expanded adiabatically to 200 psia. 511.9 Btu of work is added to the process. Find the Final temperature and volume of the air.

To solve this problem by CyclePad, we take the following steps:

1. Build
   (A) Take a begin, a compression device, and an end from the closed-system inventory shop and connect them.
   (B) Switch to analysis mode.
2. Analysis
   (A) Assume the expansion as an adiabatic process, W added is -511.9 Btu.

(B) Input the given information: (a) working fluid is air, (b) the initial air mass, pressure and temperature of the process are 5 lbm of air at 14.7 psia and 80EF, and (c) the final air pressure is 200 psia.

3. Display results

The answers are T=678.1EF and V=10.52 ft^3.

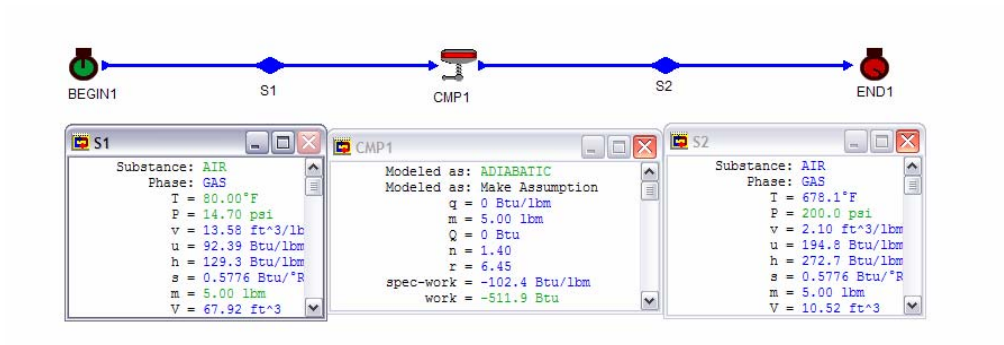

Figure E3.6.4.2. Adiabatic process

Homework 3.6.4. Adibatic Process

1. Which of the following processes, if any, would you assume to be adiabatic?
   (A) Water flows through a car radiator.
   (B) Water is pumped by a car water pump.
   (C) Air passes through a high speed turbine.
   (D) Air at high speed passes through a valve.
   (E) Air at high speed passes through a nozzle.
2. 0.1 kg of air is expanded adiabatically from 5000 kPa and 2000 C to 500 kPa and 906 C. Determine the work done by the air.
   ANSWER: 78.41 kJ.
3. 3 kg of air is compressed adiabatically from 100 kPa and 40 C to 4000 kPa and 627 C. Determine the work added to the air.
   ANSWER: -1262 kJ.

3.6.5. Constant Entropy (Isentropic) Process

If the entropy of a process is constant, it is called *isentropic*. The heat transfer to the system is equal to zero and the final entropy of the process is the same as its initial entropy.

$$Q_{12} = 0, \text{ and } S_2 = S_1 \tag{3.6.5.1}$$

The First law of thermodynamics of the closed system for the isentropic process 1-2 is:

$$-W_{12} = U_2 - U_1 \qquad (3.6.5.2)$$

An isentropic process requires a system to be adiabatic. However, an adiabatic process is not isentropic. Notice that an isentropic process model in CyclePad is defined as adiabatic and isentropic.

Example 3.6.5.1

Helium undergoes an isentropic expansion process from an initial volume of 0.007 ft^3, 300 F and 2000 psia to 0.045 ft^3. Find the work performed by the expanding air. Determine the work added or removed from the air during this process. Also determine the final temperature, the internal energy change, and entropy change of the gas.

To solve this problem by CyclePad, we take the following steps:

1. Build
   (A) Take a begin, an expansion device, and an end from the closed-system inventory shop and connect them.
   (B) Switch to analysis mode.
2. Analysis
   (A) Assume the expansion as an isentropic process.
   (B) Input the given information: (a) working fluid is helium, (b) the initial helium volume, pressure and temperature of the process are 0.007 ft^3, 2000 psia and 300EF, and (c) the final helium volume is 0.045 ft^3.
3. Display results

The answers are W=2.76 Btu, T=-241.3EF,)u=161.7-562.5=-400.8 Btu/lbm, and)s=-0.6805-(-0.6805)=0 Btu/[lbm(R)].

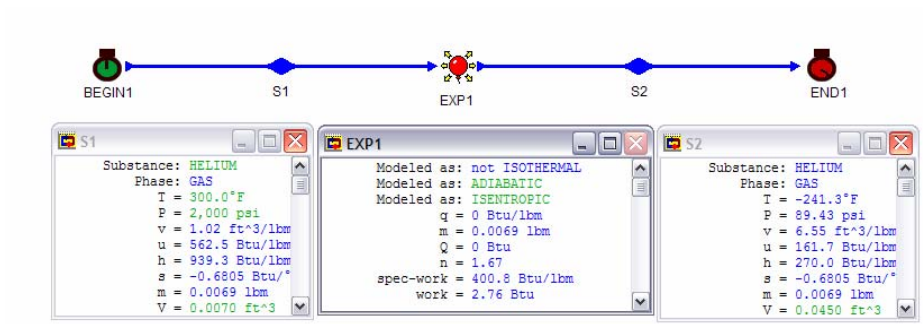

Figure E3.6.5.1. Isentropic process

Example 3.6.5.2.

2.2 lbm of helium undergoes an isentropic expansion process from an initial 600 psia and 600EF to 100 psia. Find the work performed by the expanding water. Determine the work added or removed from the water during this process. Also determine the final temperature and quality, the internal energy change, and entropy change of the gas.

To solve this problem by CyclePad, we take the following steps:

1. Build
   (A) Take a begin, an expansion device, and an end from the closed-system inventory shop and connect them.
   (B) Switch to analysis mode.
2. Analysis
   (A) Assume the expansion as an isentropic process.
   (B) Input the given information: (a) working fluid is helium, (b) the initial pressure and temperature of the process are 600 psia and 600EF, (c) the mass is 2.2 lbm, and (d) the final pressure is 100 psia.
3. Display results

The answers are W=885.0 Btu (removed), T=56.72EF, x=0.9637;)u=382.3-784.6=-402.3 Btu/lbm, and)s=0.3283-0.3283=0 Btu/[lbm(R)].

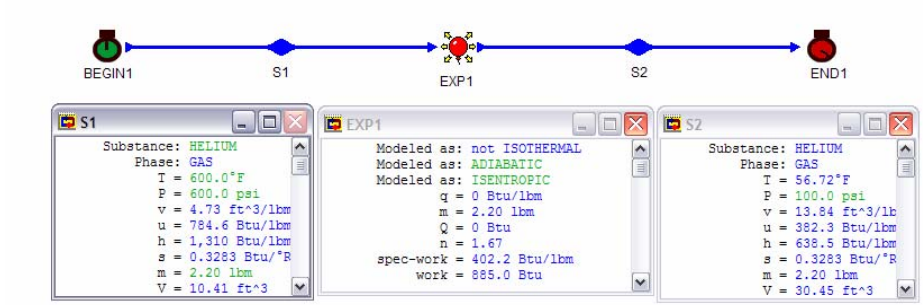

Figure E3.6.5.2. Isentropic process

Homework 3.6.5. Isentropic Process

1. Air at 2900EF and 550 psia contained in a tank expands isentropically. The final volume is 5 times the initial volume. Find the (A) final pressure, (B) final temperature, (C) heat transferred, (D) work done, and (E) change in entropy.
   ANSWER: (A) 57.79 psia, (B) 1305EF, (C) 0, (D) 273 Btu, (E) 0.
2. 1.3 kg of ir at 2400EC and 1 Mpa expands isentropically. The final volume is 5 times the initial volume. Find the (A) final pressure, (B) final temperature, (C) heat transferred, (D) work done, and (E) change in entropy.
   ANSWER: (A) 105.1 kPa, (B) 1131EC, (C) 0, (D) 1182 kJ, (E) 0.
3. Water is expanded isentropically from 1 Mpa and 400 C to 200 kPa. Find the final temperature of the water and the work done by the water.
   ANSWER: 190.5EC, 317.1 kJ/kg.
4. Steam at 0.4 Mpa and 433 K contained in a cylinder and piston device is expanded isentropically to 0.3 MPa. Find the final temperature and quality of the steam.
   ANSWER: 406.7 K, 0.9979.
5. Freon R-12 at 0.4 Mpa and 300 K contained in a cylinder and piston device is expanded isentropically to 0.2 MPa. Find the final temperature of the substance.

ANSWER: 274.6 K.

6. Freon R-22 at 0.4 Mpa and 300 K contained in a cylinder and piston device is expanded isentropically to 0.2 MPa. Find the final temperature of the substance.
   ANSWER: 268.2 K.
7. Freon R-134a at 0.4 Mpa and 300 K contained in a cylinder and piston device is expanded isentropically to 0.2 MPa. Find the final temperature of the substance.
   ANSWER: 278 K.
8. Ammonia at 0.4 Mpa and 300 K contained in a cylinder and piston device is expanded isentropically to 0.2 MPa. Find the final temperature of the substance.
   ANSWER: 255.4 K.
9. Methane at 0.4 Mpa and 300 K contained in a cylinder and piston device is expanded isentropically to 0.2 MPa. Find the final temperature of the substance.
   ANSWER: 247.5 K.
10. Carbon dioxide at 0.4 Mpa and 300 K contained in a cylinder and piston device is expanded isentropically to 0.2 MPa. Find the final temperature of the substance.
    ANSWER: 256.7 K.
11. Helium at 0.4 Mpa and 300 K contained in a cylinder and piston device is expanded isentropically to 0.2 MPa. Find the final temperature of the substance.
    ANSWER: 227.2 K.

3.6.6. Polytropic Process

Many practical thermodynamic applications undergo processes described by a specific relationship between pressure and volume. A process described by pV^n=constant is called a polytropic process. The exponential index n is either known or is obtained from experimental data. The polytropic process is a generalization of the isentropic and other processes that are used when the working fluid is an ideal gas. The polytropic process is quite useful for analyzing ideal gas processes.

The boundary work and the First law of thermodynamics of the closed system for the constant pressure process 1-2 are:

$$W_{12} = IpdV, \tag{3.6.6.1}$$

and

$$Q_{12} = W_{12} + U_2 - U_1 \tag{3.6.6.2}$$

Example 3.6.6.1.

2 lbm of water undergoes an polytropic compression process from an initial 100 psia and 600EF to 300 psia and 620EF. Find the work added to the water. Determine the heat added or removed from the water during this process. Also determine the exponential index n of the polytropic process, the internal energy change, and entropy change of the water.

To solve this problem by CyclePad, we take the following steps:

1. Build

(A) Take a begin, a compression device, and an end from the closed-system inventory shop and connect them.
(B) Switch to analysis mode.

2. Analysis
   (A) Input the given information: (a) working fluid is water, (b) the initial pressure and temperature of the process are 100 psia and 600EF, (c) the mass is 2 lbm, and (d) the final pressure and temperature of the process are 300 psia and 620EF.
3. Display results

The answers are W=-252.9 Btu (added), Q=-258.3 Btu (removed), n=1.00,;)u=1211-1214=-3 Btu/lbm, and)s=1.64-1.76=-0.08 Btu/[lbm(R)].

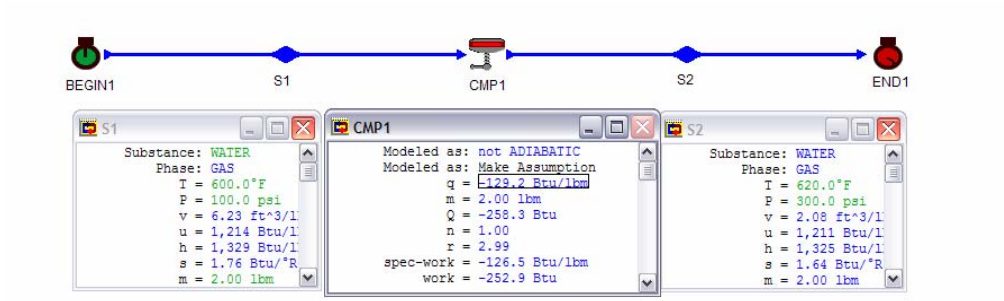

Figure E3.6.6.1. Polytropic process

Example 3.6.6.2.

0.34 lbm of carbon dioxide at 900EF and 300 psia contained in a tank expands polytropically to 100 psia and 550EF. Determine the heat added or removed from the gas during this process. Also determine the exponential index n of the polytropic process, the internal energy change, and entropy change of the gas.

To solve this problem by CyclePad, we take the following steps:

1. Build
   (A) Take a begin, an expansion device, and an end from the closed-system inventory shop and connect them.
   (B) Switch to analysis mode.
2. Analysis
   (A) Input the given information: (a) working fluid is carbon dioxide, (b) the initial pressure and temperature of the process are 300 psia and 900EF, (c) the mass is 0.34 lbm, and (d) the final pressure and temperature of the process are 100 psia and 550EF.
3. Display results

The answers are W=14.45 Btu (removed), Q=-4.06 Btu, n=1.37,)u=157.1- 211.6=-54.5 Btu/lbm, and)s=0.6638-0.6740=-0.0102 Btu/[lbm(R)].

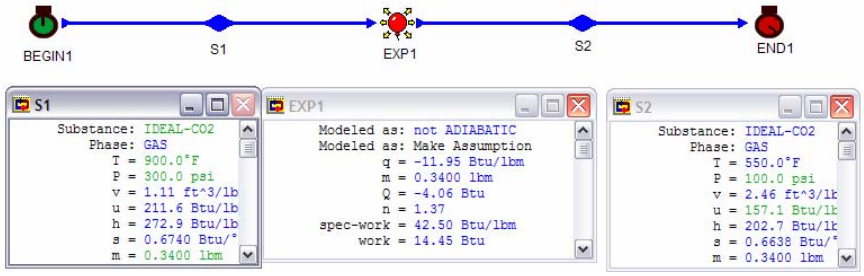

Figure E3.6.6.2. Polytropic process

Homework 3.6.6. Polytropic Process

1. Helium undergoes an expansion process [$pv^2=p_1(v_1)^2=p_2(v_2)^2$=constant] from an initial state at 0.01 ft^3, 80EF and 1000 psia to a final state at 0.1 ft^3. Find the helium mass, temperature, pressure, specific heat added and the specific work done by the helium.
   ANSWER: 0.0069 lbm, -405.7EF, 10 psia, -118.7 Btu/lbm, 240.9 Btu/lbm.
2. Carbon dioxide undergoes an expansion process [$pv^3=p_1(v_1)^3=p_2(v_2)^3$=constant] from an initial state at 0.04 ft^3, 80EF and 1000 psia to a final state at 0.1 ft^3. Find (A) the air mass, (B) final temperature and pressure, (C) specific heat added and (D) the specific work done by the carbon dioxide.
   ANSWER: (A) 0.304 lbm, (B) -373.3EF, 64 psia, (C) -60.31 Btu/lbm, (D) 10.23 Btu/lbm.
3. 0.08 lb of helium in a cylinder fitted with a piston is compressed from 14.3 psia and 75EF to 2000 psia in a polytropic process, $pv^{1.3}$=constant. Determine the specific work and heat of the compression process.
   ANSWER: -1881 Btu/lbm, -83.09 Btu.
4. 1 kg of helium is compressed in a polytropic process ($pv^{1.3}$=constant). The initial pressure, temperature and volume are 620 kPa, 715.4 K and 0.15 m^3. The final volume is 0.1 m^3. Find (A) the final temperature and pressure, (B) the work done, and (C) the heat interaction**.**
   ANSWER: (A) 807.9 K, 1050 kPa, (B) -40.10 kJ, (C) -22.14 kJ.
5. Air initially at 65EF and 75 psia is compressed to a final pressure of 300 psia and temperature of 320EF. Find the value of the polytropic exponent for this process.
   ANSWER: 1.4.
6. Air in a piston-cylinder set up expands from 30 psia and 12 ft^3/lbm to 22 psia and 18 ft^3/lbm. Find the work done for the processes.
   ANSWER: 28.34 Btu/lbm.
7. Air initially at 15 psia and 250EF is expanded from 13 ft^3 to 20 ft^3. If the final temperature of the air is 50EF, what is the final pressure? What is the heat added? What is the work added?
   ANSWER: 7 psia, 12.19 Btu, 13.24 Btu.

8. A cylinder contains 3 kg of air and is covered by a piston. The air expands from an initial state of 0.02 m^3 and 7 bars to a final pressure of 1 bar. Determine the work done by the air during a polytropic expansion process, pv^n=constant, if
   (A) n=3.
   (B) n=1.4.
   (C) n=1.2.
   (D) n=1.
   (E) n=1.67.
   ANSWER: (A) 5.09 kJ, (B) 14.93 kJ, (C) 19.39 kJ, (D) 27.24 kJ, (E) 11.32 kJ.
9. A cylinder contains 6 kg of carbon dioxide and is covered by a piston. The gas expands from an initial state of 0.02 m^3 and 7 bars to a final pressure of 1 bar. Determine the work done by the gas during a polytropic expansion process, pv^n=constant, if n=1.5.
   ANSWER: (A) 26.72 kJ.
10. A cylinder contains 3 kg of helium and is covered by a piston. The gas expands from an initial state of 0.02 m^3 and 7 bars to a final pressure of 1 bar. Determine the work done by the gas during a polytropic expansion process, pv^n=constant, if n=1.4.
    ANSWER: (A) 13.36 kJ.
11. A cylinder contains 0.3 kg of nitrogen and is covered by a piston. The gas expands from an initial state of 0.02 m^3 and 7 bars to a final pressure of 1 bar. Determine the work done by the gas during a polytropic expansion process, pv^n=constant, if n=1.5.
    ANSWER: (A) 1.493 kJ.

3.6.7. Heating and Cooling Processes

Many practical thermodynamic applications undergo heating and cooling processes. The heating and cooling processes can be isobaric, or isochoric, or other processes. In the software CyclePad, there is a heating device and a cooling device in the closed system inventory shop.

Without the shaft work, the boundary work and the First law of thermodynamics of the closed system for the heating and cooling process 1-2 are:

$$W_{12} = IpdV, \tag{3.6.7.1}$$

and

$$Q_{12} = W_{12} + U_2 - U_1 \tag{3.6.7.2}$$

Example 3.6.7.1.

0.4 lbm of helium is cooled in a rigid tank from 525 psia and 870EF to 220EF. Determine the heat removed, final pressure of helium, change of internal energy, and change of entropy.

To solve this problem by CyclePad, we take the following steps:

1. Build
   (A) Take a begin, a cooler, and an end from the closed-system inventory shop and connect them.

(B) Switch to analysis mode.

2. Analysis
   (A) Assume the cooler as an isochoric process, W added is 0.
   (B) Input the given information: (a) working fluid is helium and mass is 0.4 lbm, (b) the initial helium pressure and temperature of the process are 525 psia and 870EF, and (d) the final temperature of the process is 220EF.
3. Display results

The answers are Q=-192.5 Btu, p=268.4 psia,)u=503.2-984.5=-481.3 Btu/lbm, and)s=0.1783-0.6752=-0.4969 Btu/[lbm(R)].

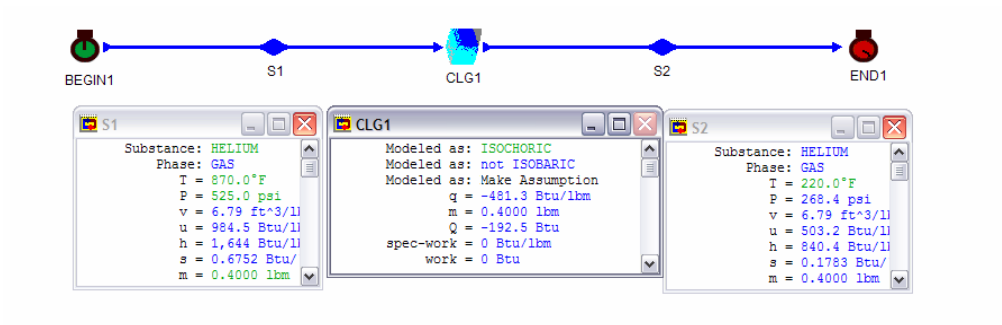

Figure E3.6.7.1. Cooling process

Example 3.6.7.2.

0.2 kg of R-134a is heated from a quality of 0.58 and 8EC to saturated vapor at 410 kPa. The heat added to the R-134a is 90 kJ. Determine the work added or removed, final temperature of, change of internal energy, and change of entropy.

To solve this problem by CyclePad, we take the following steps:

1. Build
   (A) Take a begin, a heater, and an end from the closed-system inventory shop and connect them.
   (B) Switch to analysis mode.
2. Analysis
   (A) Q added to the heater is 90 kJ.
   (B) Input the given information: (a) working fluid is R-134a and mass is 0.2 kg, (b) the initial R-134a quality and temperature of the process are 0.58 and 8EC, and (d) the final quality and pressure of the process are 1 and 410 kPa.
3. Display results

The answers are W=73.67 kJ (removed), T=9.55EC,)u=403.9-322.3=81.6 kJ, and)s=1.72-1.44=0.28 kJ/[kg(K)].

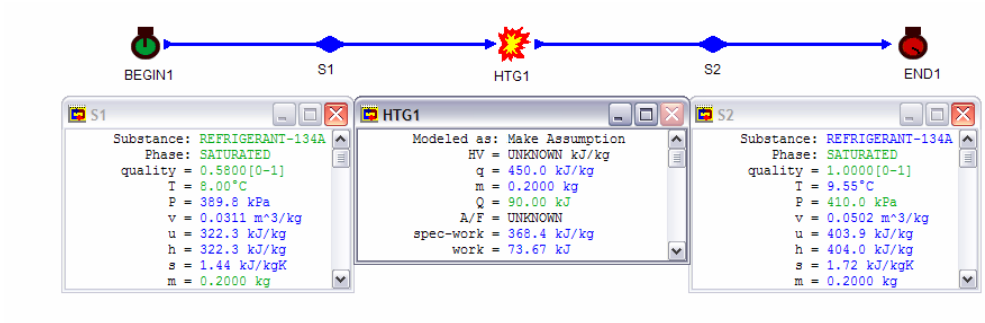

Figure E3.6.7.2. Heating process

Homework 3.6.7. Heating and Cooling Process

1. 4 lbm of helium is cooled in a rigid tank from 25 psia and 810EF to 250EF. Determine the work added, heat removed, and final pressure of helium.
   ANSWER: 0, -1659 Btu, 13.97 psia.
2. 2 kg of R-22 is heated from a quality of 0.8 and 9EC to saturated vapor at 400 kPa. The heat added to the R-12 is 94 kJ. Determine the work added or removed, and final temperature of R-22.
   ANSWER: 34.63 kJ, -6.59EC.
3. 2.4 kg of water is heated from a quality of 0.98 and 59EC to saturated vapor at 710 kPa. The heat added to the water is 940 kJ. Determine the work added or removed, and final temperature of water.
   ANSWER: 550.2 kJ, 165.6EC.

3.6.8. Compression and Expansion Processes

Many practical thermodynamic applications undergo compression and expansion processes. The compression and expansion processes can be adiabatic, isentropic, polytropic, or other processes. In the software CyclePad, there is a compression device and an expansion device in the closed system inventory shop.

The boundary work and the first law of thermodynamics of the closed system for the compression and expansion process 1-2 are:

$$W_{12} = IpdV, \tag{3.6.8.1}$$

and

$$Q_{12} = W_{12} + U_2 - U_1 \tag{3.6.8.2}$$

Example 3.6.8.1.

2.3 lbm of air at 290EF and 100 psia expands isentropically. The final pressure is 25 psia. Find the (a) final temperature, (b) heat transferred, (c) work done, and (d) change in entropy.

To solve this problem by CyclePad, we take the following steps:

1. Build
   (A) Take a begin, an expansion device, and an end from the closed-system inventory shop and connect them.
   (B) Switch to analysis mode.
2. Analysis
   (A) Assume the expansion as an isentropic process.
   (B) Input the given information: (a) working fluid is air, (b) the initial temperature and pressure of the process are 290EF and 100 psia, (c) the mass is 2.3 lbm, and (d) the final pressure is 25 psia.
3. Display results

The answers are T=44.82EF, Q=0 Btu, W=96.54 Btu (removed),, and)s=0.525-0.525=0 Btu/[lbm(R)].

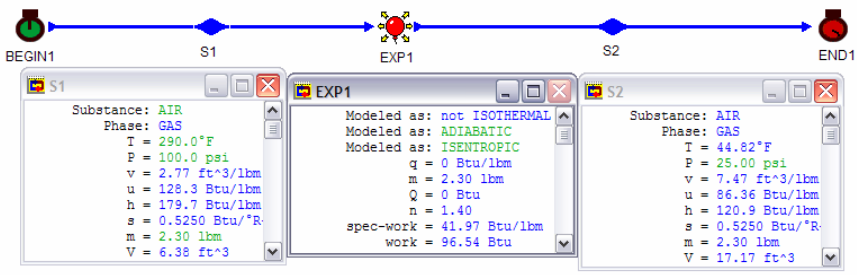

Figure E3.6.8.1. Expansion process

Example 3.6.8.2.

0.0804 kg of helium in a cylinder fitted with a piston is compressed from 103 kPa and 0.6 m^3 to 443 kPa in a polytropic process with n=1.5. Determine the final temperature, specific internal energy change, specific internal entropy change of the helium, work and heat of the compression process.

To solve this problem by CyclePad, we take the following steps:

1. Build
   (A) Take a begin, an expansion device, and an end from the closed-system inventory shop and connect them.
   (B) Switch to analysis mode.
2. Analysis
   (A) Assume the expansion as a polytropic process, n=1.5.
   (B) Input the given information: (a) working fluid is helium, (b) the initial helium mass, pressure and volume of the process are 0.0804 kg, 103 kPa and 0.6 m^3, and (c) the final helium pressure is 443 kPa.
3. Display results

The answers are T=328.7EC,)u=1866-1147=719 kJ/kg,)s=6.13-6.64=-0.51 kJ/[kg(K)], W=-77.41 kJ (added), and Q=-19.64 kJ.

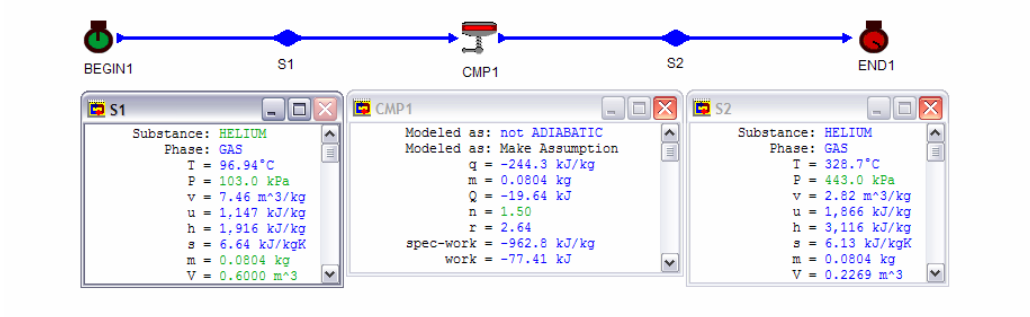

Figure E3.6.8.2. Compression process

Homework 3.6.8. Compression and Expansion Processes

1. Carbon dioxide expands in a polytropic process with n=1.3. The initial pressure, temperature and volume are 620 kPa, 715.4 K and 0.15 m^3. The final volume is 1 m^3. Find (A) the final temperature, (B) the work done, (C) the mass of water.
   ANSWER: (A) 404.9 K, (B) 134.5 kJ, (C) 0.6881 kg.
2. Air initially at 65EF and 75 psia is compressed to a final pressure of 300 psia in a polytropic process with n=1.57. Find (A) the final temperature, (B) the work done, (C) the change of internal energy, and (D) the heat interaction.
   ANSWER: (A) 408.2EF, (B) -41.32 Btu/lbm, (C) 58.78 Btu/lbm, (D) 17.52 Btu/lbm.
3. 0.023 lbm of air initially at 15 psia and 250EF is expanded adiabatically to 0.92 ft^3. If the final temperature of the air is 50EF, what is the final pressure? What is the heat added? What is the work added or removed?
   ANSWER: 4.71 psia, 0, 0.7875 Btu.

3.7. MULTI- PROCESS

We have studied several processes separately. These processes can be combined to perform an engineering task. The multi-process analysis is illustrated by the following examples.

Example 3.7.1.

0.023 lbm of air initially at state 1 (80EF and 100 psia) in a piston-cylinder set up undergoes the following two processes:

1-2 isometric (constant volume) process where q_{12}=300 Btu/lbm(heat added)
2-3 adiabatic expansion to a pressure of 25 psia

Find (A) the heat transferred and work done for process 1-2, and (B) the heat transferred and work done for process 2-3, (C) the heat transferred and work done for process 1-2-3, (D) pressure and temperature at state 2, (E) temperature at state 3, (F) specific internal energy change 1-3, and (G) specific entropy change 1-3.

To solve this problem by CyclePad, we take the following steps:

1. Build
   (A) Take a begin, a heating device, an expansion device, and an end from the closed-system inventory shop and connect them.
   (B) Switch to analysis mode.
2. Analysis
   (A) Assume the heater is isometric and expansion device as an adiabatic process.
   (B) Input the given information: (a) working fluid is air, (b) the initial mass, temperature and pressure of the process are 0.023 lbm, 80EF and 100 psia, and (d) the final pressure at state 3 is 25 psia.
3. Display results
   (A) Display state 1, state 2, state 3, the heating device and expansion device results. The answers are: (A) Q_{12}=6.9 Btu, W_{12}=0 Btu; (B) Q_{23}=0 Btu, W_{23}=5.01 Btu; (C) $Q_{13}=Q_{12}+Q_{23}$=6.9+0=6.9 Btu, $W_{13}=W_{12}+W_{23}$=0+5.01=5.01 Btu, (D) p_2=424.7 psia, T_2=1832EF; (E) T_3=560.7EF; (F))u=u_3-u_1=174.7-92.39=82.31 Btu/lbm; and (G))s=s_3-s_1=0.6939-0.4463=0.2476 Btu/[lbm(R)].

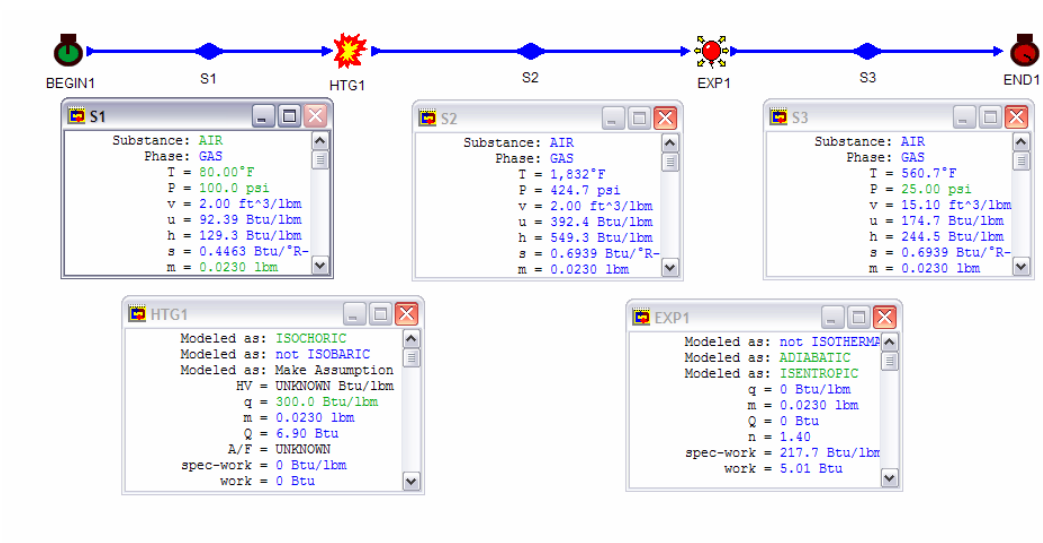

Figure E3.7.1. Multi process

Example 3.7.2.

Air initially at state 1 (20EC, 0.0024 m^3 and 100 kPa) in a piston-cylinder set up undergoes the following two processes:

1-2 adiabatic and isentropic compression to a volume of 0.0003 m^3.
2-3 constant volume heating with heat added 1.5 kJ.

Find (A) the heat transferred and work done for process 1-2, (B) the heat transferred and work done for process 2-3, (C) the heat transferred and work done for process 1-2-3, (D) pressure and temperature at state 2, (E) pressure and temperature at state 3, (F) specific internal energy change 1-3, and (G) specific entropy change 1-3.

To solve this problem by CyclePad, we take the following steps:

1. Build
   (A) Take a begin, a compression device, a heating device, and an end from the closed-system inventory shop and connect them.
   (B) Switch to analysis mode.
2. Analysis
   (A) Assume the compression device as an adiabatic and isentropic and heater as isometric process. Q_{23} added in the heater is 1.5 kJ.
   (B) Input the given information: (a) working fluid is air, (b) the initial temperature, volume and pressure of the process are 20EC, 0.0024 m^3 and 100 kPa, and (d) the volume at state 2 is 0.0003 m^3.
3. Display results

Display state 1, state 2, state 3, the compression device and heating device results. The answers are: (A) Q_{12}=0 kJ, W_{12}=-0.7784 kJ; (B) Q_{23}=1.5 kJ, W_{23}=0 kJ; (C) $Q_{13}=Q_{12}+Q_{23}$=0+1.5=1.5 kJ, $W_{13}=W_{12}+W_{23}$=-0.7784+0=-0.7784 kJ; (D) p_2=1838 kPa, T_2=400.3EC; (E) p_3=3838 kPa and T_3=1133EC; (F) $)u=u_3-u_1$=1008-210.1=797.9 kJ; and (G) $)s=s_3-s_1$=2.93-2.40=0.53 kJ/[kg(K)].

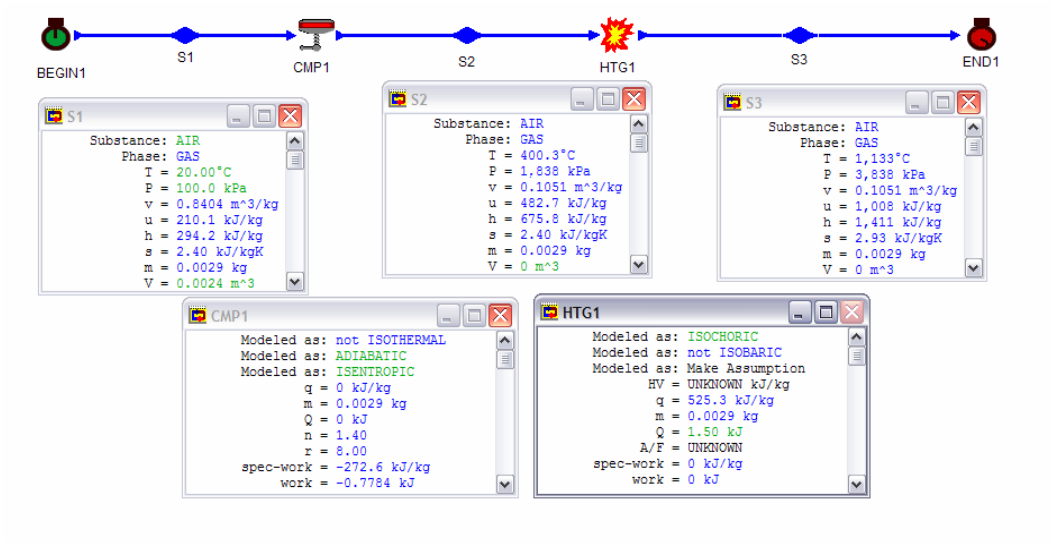

Figure E3.7.2. Multi process

Homework 3.7. Multi-Process

1. 1.2 lbm of air initially at 80EF and 100 psia in a piston-cylinder set up undergoes the following three reversible processes:

   1-2 isometric process where q_{12}=300 Btu/lbm
   2-3 isentropic expansion
   3-4 isothermal expansion

   The pressure and temperature of air at state 4 are 1 psia and 80 F.
   Find the (A) heat transferred and work done for process 1-2, (B) heat transferred and work done for process 2-3, and (C) heat transferred and work done for process 3-1.
   ANSWER: (A) 360 Btu, 0, (B) 0, 360 Btu, (C) 43.88 Btu, 43.88 Btu.
2. Air initially at state 1 (20EC, 0.0024 m^3 and 100 kPa) in a piston-cylinder set up undergoes the following two processes:

   1-2 isentropic compression to a volume of 0.0003 m^3.
   2-3 constant pressure heating with heat added 1.5 kJ.

   Find (A) the heat transferred and work done for process 1-2, and (B) the heat transferred and work done for process 2-3, and (C) the heat transferred and work done for process 1-2-3, (D) pressure and temperature at state 2, (E) pressure and temperature at state 3, (F) specific internal energy change 1-3, and (G) specific entropy change 1-3.
   ANSWER: (A) 0, -0.7784 kJ, (B) 1.5 kJ, 0.4286 kJ, (C) 1.5 kJ, 0.3498 kJ, (D) 1838 kPa, 400.3EC, (E) 1838 kPa, 923.8EC, (F) 647.8 kJ/kg, (G) 0.58 kJ/[kg(EC)].

3. 0.23 lbm of air in a piston-cylinder set up is heated at 100 psia constant pressure from a temperature of 100EF to a temperature of 200EF. The air is then expanded isentropically until the volume doubles. Find (A) the pressure, temperature and specific volume of the air at the final state, (B) heat transferred and work done for the heating process, (C) heat transferred and work done for the isentropic process, and (D) total heat transferred and work done for the heating and the isentropic processes.
   ANSWER: (A) 0, 6.29 Btu, (B) 5.51 Btu, 1.57 Btu, (C) 5.51 Btu, (D) 7.86 Btu.
4. Air at 100 kPa, 20 C and 0.004 m^3 in a piston-cylinder set up is compressed isentropically to one-fourth its original volume. It is then cooled at constant volume to 175EC. Find (A) the pressure and temperature of the air at the final state of the isentropic process, (B) the pressure of the air at the final state of the cooling process, (C) heat transferred and work done for the isentropic process, (D) heat transferred and work done for the cooling process, and (E) total heat transferred and work done for the cooling and the isentropic processes.
   ANSWER: (A) 696.4 kPa, 237.3EC, (B) 611.5 kPa, (C) 0, -0.7411 kJ, (D) -0.2124 kJ, (E) -0.2124 kJ, -0.7411 kJ.
5. Air is to be compressed from 101 kPa and 293 K to a final state of 1000 kPa and 450 K. Find:
   (A) the work if the compression is done first isentropically to the final pressure and then cooled to the final state.
   (B) the work if the process is done polytropically.

3.8. SUMMARY

Energy is stored within system. Heat and work are not stored within system; they are added to the system or removed from the system. Heat and work are the microscopic and macroscopic energy transfers across the boundary surface from the surroundings to the system or vice versa without mass transfer. Both work and heat are path functions. There are two types of important thermodynamic work: boundary work and shaft work. Boundary work is given by the expression IpdV, where p is a function of V. Work produced by the system is positive and heat added to the system is positive. The energy balance for a closed system, called the First law of thermodynamics for a closed system, can be expressed as Q-W=)E, where $E=E_k+E_p+U+*pV$. Notice that flow energy is equal to zero because there is no mass transfer across the boundary surface of the system. Application of the First law of thermodynamics to various processes and devices using CyclePad are illustrated.

Chapter 4

FIRST LAW OF THERMODYNAMICS FOR OPEN SYSTEMS

4.1. INTRODUCTION

In Chapter 3, several processes, by focusing attention on a fixed mass (control mass or closed system), were studied. In many engineering applications, it is more convenient to draw the system boundary around a fixed space (control volume or open system) through which working fluid may flow. In this chapter, many applications using the open system approach will be studied. The principles used in the study of open systems are the conservation of mass (mass balance) and the First law of thermodynamics (energy balance).

4.2. CONSERVATION OF MASS

4.2.1. General Case

The law of the conservation of mass states that mass can neither be created nor destroyed. In thermodynamics there are two kinds of systems: open and closed. For a closed system (that is, a fixed mass) the conservation of mass is true. No equation is necessary. However, for an open system (that is, a fixed space) an expression for the conservation of mass needs to be developed.

The mass (m) content of an open system may be changed by mass flow in (m_i) across the boundary of the open system from the surroundings or mass exit (m_e) across the boundary of the open system to the surroundings, or both. Let the initial mass content of system at time t_1 is m_1; the final mass content of system at time t_2 is m_2; mass flow in across the boundary of the open system from the surroundings from t_1 to t_2 is m_i; mass exit across the boundary of the open system to the surroundings from t_1 to t_2 is m_e. Applying the *conservation of mass* to the open system under these conditions becomes

$$m_2 - m_1 = m_i - m_e \tag{4.2.1.1}$$

Equation (4.2.1.1) is the law of conservation of mass for an open system. In using Equation (4.2.1.1), we must always remember the important subscripts that 1 refers to time 1

(t_1) and 2 refers to time 2 (t_2); and that i and e refer to locations; i refers to inlet section i and e refers to exit section e, respectively.

The law of conservation of mass for an open system [Equation (4.2.1.1)] expressed in words is

[time change of the mass contained within the open system] = [net mass flow in across the boundary of the open system from the surroundings] - [net mass exit across the boundary of the open system to the surroundings]

Various special forms of the law of conservation of mass for an open system can be written. For examples

$$m_2 - m_1 = (\Delta_i V_i A_i - \Delta_e V_e A_e))t \quad (4.2.1.2)$$

$$I_{\text{Time from t1 to t2}} dm = I_{\text{inlet sections}} dm_i - I_{\text{exit sections}} dm_e \quad (4.2.1.3)$$

$$I_{\text{Time from t1 to t2}} dm = I_{\text{inlet sections}} \Delta_i \mathbf{V}_i dA_i - I_{\text{exit sections}} \Delta_e \mathbf{V}_e dA_e \quad (4.2.1.4)$$

Equation (4.2.1.2) is the algebraic form of Equation (4.2.1.1); Equation (4.2.1.3) and Equation (4.2.1.4) are the integral forms of Equation (4.2.1.1), respectively.

$$dm = dm_i - dm_e \quad (4.2.1.5)$$

Equation (4.2.1.5) is the differential forms of Equation (4.2.1.1).

$$)m/)t = m_i/)t - m_e/)t \quad (4.2.1.6)$$

Equation (4.2.1.6) is the finite time rate form of Equation (4.2.1.1), where $)m = m_2 - m_1$, and $)t = t_2 - t_1$, respectively.

$$dm/dt = mdot_i - mdot_e \quad (4.2.1.7)$$

Equation (4.2.1.7) is the differential time rate form of Equation (4.2.1.1). The time rate of the law of conservation of mass for an open system [Equation (4.2.1.7)] expressed in words is

[time rate of change of the mass contained within the open system at time t] = [net rate of mass flow in across the boundary of the open system from the surroundings at time t] - [net rate of mass exit across the boundary of the open system to the surroundings at time t]

4.2.2. Steady Flow Case

Many engineering processes that operate under a steady condition for long period of time are called steady-flow processes. A *steady system* is one whose quantities such as mass and properties within the system do not change with respect to time. A *steady-flow* process is a

process whose flow quantities at inlet and exit boundary sections do not change with respect to time. Equation (4.2.1.2), the law of conservation of mass for an open system becomes

$$m_2 - m_1 = 0 \tag{4.2.2.1}$$

$$mdot_i = mdot_e \tag{4.2.2.2}$$

and

$$\Delta_i \mathbf{V}_i A_i = \Delta_e \mathbf{V}_e A_e \tag{4.2.2.3}$$

The law of conservation of mass for a steady flow open system [Equation (4.2.2.2)] expressed in words is

[total rate of mass flow in across the boundary of the open system from the surroundings] = [total rate of mass exit across the boundary of the open system to the surroundings at time t]

Equation (4.2.2.3) is called *continuity equation*.

Example 4.2.1.

A hot-air stream at 200EC and 200 kPa with mass flow rate of 0.1 kg/s enters a mixing chamber where it is mixed with a stream of cold-air at 200 kPa and 10EC with a volumetric rate flow of 1 m^3/s. The mixture leaves the mixing chamber at 200 kPa. Determine the mass flow rate and the volumetric rate flow of air leaving the chamber.

To solve this problem by CyclePad, we take the following steps:

1. Build
   (A) Take two sources, a mixing chamber, and a sink from the open-system inventory shop and connect them.
   (B) Switch to analysis mode.
2. Analysis
   (A) Assume the mixing chamber is isobaric.
   (B) Input the given information: (a) working fluids are air, (b) mass flow rate, pressure and temperature of the hot air at the inlet are 0.1 kg/s, 200 kPa and 200EC, (c) volumetric flow rate, pressure and temperature of the cold air at the other inlet are 1 m^3/s, 200 kPa and 10EC.
3. Display results

The answers are mdot,mix=2.56 kg/s and Vdot,mix=1.07 m^3/s.

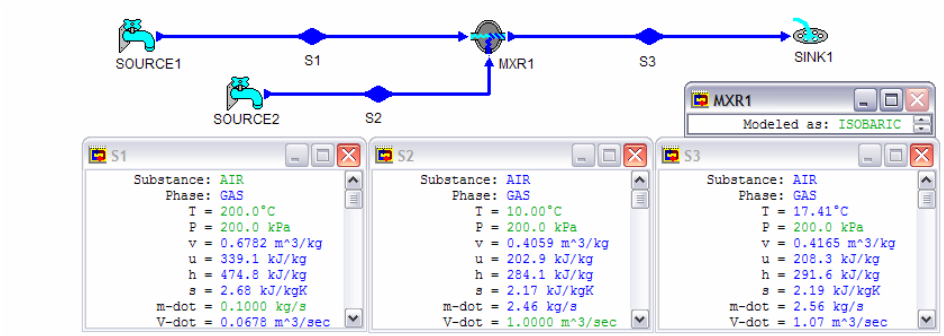

Figure E4.2.1. Mixing chamber

Homework 4.2. Mass Conservation

1. What is an open system?
2. Water flows through a steam power plant, which consists of a pump, a boiler, a turbine and a condenser. Is the steam power plant an open system? Is the turbine of the steam power plant an open system?
3. Define mass flow rate. How is it differ from mass?
4. Describe mass conservation in words for an open system.
5. In the mass balance equation, $m_2 - m_1 = m_i - m_e$, what are the subscripts 1, 2, i and e refer to?
6. In the mass balance equation, $m_2 - m_1 = m_i - m_e$, state the physical meaning of each term.
7. What is a steady flow?
8. Does mass flow rate proportional to fluid flowing velocity? Does mass flow rate proportional to fluid specific volume?
9. Describe mass conservation in words for compressing air into your car tire.
10. A 1 kg/s stream of refrigerant R-134a at 1 Mpa and 10EC is mixed with another stream at 1 Mpa and 50EC in a mixing chamber. If the mass flow rate of the hot stream is twice that of the cold one, determine the mass and volumetric rate flow of the refrigerant at the exit of the mixing chamber?
    ANSWER: 3 kg/s, 0.0394 m^3/s.

4.3. First Law of Thermodynamics

4.3.1. General Case

The energy (E) content of an open system may be changed by energy flow in (E_i) with mass flow in across the boundary of the open system from the surroundings, or energy exit (E_e) with mass exit across the boundary of the open system to the surroundings, or heat (Q), or work (W) or any combination of the four quantities. Let the initial energy content of an open system at time t_1 is E_1; the final energy content of an open system at time t_2 is E_2; Heat added to the system during the time from t_1 to t_2 is Q_{12}; and work added to the system during

the time from t_1 to t_2 is W_{12}; Energy flow in across the boundary of the open system from the surroundings from t_1 to t_2 is E_i; Energy exit across the boundary of the open system to the surroundings from t_1 to t_2 is E_e. *Energy conservation* applied to the open system under these conditions becomes

$$E_2 - E_1 = Q_{12} - W_{12} + E_i - E_e \tag{4.3.1.1}$$

where E is the total energy.

The total energy (E) is made of potential energy (E_p), kinetic energy (E_k), internal energy (U) and flow energy (pV), i.e. $E=E_p+E_k+U+pV$. Notice that flow energy (or called flow work in some textbooks) is the energy required to push a volume in (or out) by pressure across the boundary surface of the open system. Thus energy contained within the open system does not have flow energy. Therefore, $E_1=(E_p)_1+(E_k)_1+U_1$, $E_2=(E_p)_2+(E_k)_2+U_2$, $E_i=(E_p)_i+(E_k)_i+U_i+pV_i=(E_p)_i+(E_k)_i+H_i$ and $E_e=(E_p)_e+(E_k)_e+U_e+pV_e=(E_p)_e+(E_k)_e+H_e$.

Also notice that the boundary work is zero in the case of the open system, which is considered to be a volume of fixed identity, i.e., dV=0. Therefore $W_{boundary}=IpdV=0$. Hence, the total work (W) in Equation (4.3.1.1) is made of shaft work (W_{shaft}) only if other modes of work are not presented.

$$W=W_{boundayr}+W_{shaft}=W_{shaft}$$

Equation (4.3.1) is the *First law of thermodynamics* for an open system.

The First law of thermodynamics for an open system [Equation (4.3.1.1)] expressed in words is

[time change of the energy contained within the open system] = [net heat added to the system] - [net work added to the system] +[energy flow in with mass flow in across the boundary of the open system from the surroundings] - [energy exit (E_e) with mass exit across the boundary of the open system to the surroundings]

Various special forms of the first law of thermodynamics for an open system can be written. For example, the amount of energy change (IdE) from time t_1 to time t_2 can be expressed as

$$IdE=I*Q-I*W+I_{inlet\ sections}dE_i-I_{exit\ sections}-dE_e \tag{4.3.1.2}$$

Equation (4.3.1.2) is the integral form of Equation (4.3.1.1).

$$dE=*Q-*W+dE_i-dE_e \tag{4.3.1.3}$$

Equation (4.3.1.3) is the differential form of Equation (4.3.1.1).

$$)E/)t=Q_{12}/)t-W_{12}/)t+)E_i/)t-)E_e/)t \tag{4.3.1.4}$$

Equation (4.3.1.4) is the finite time rate form of Equation (4.3.1.1), where $)E=E_2 -E_1$, and $)t=t_2 -t_1$, respectively.

$$dE/dt=Qdot-Wdot+ Edot_i -Edot_e \quad (4.3.1.5)$$

Equation (4.3.1.5) is the differential time rate form of Equation (4.3.1.1). The time rate of the First law of thermodynamics for an open system [Equation (4.3.1.5)] expressed in words is

[time rate of change of the energy contained within the open system at time t] = [net rate of heat added to the system at time t] - [net rate of work added to the system at time t] +[rate of energy flow in with mass flow in across the boundary of the open system from the surroundings at time t] - [rate of energy exit (E_e) with mass exit across the boundary of the open system to the surroundings at time t]

4.3.2. Steady Flow

For steady flow, the change in mass and energy within the open system are both zero.

$$E_2 -E_1= 0 \text{ and } m_2 -m_1= 0 \quad (4.3.2.1)$$

Thus the various forms of the First law of thermodynamics of an open system [Equations (4.3.1.1), (4.3.1.2), (4.3.1.3), (4.3.1.4), and (4.3.1.5)] are reduced to:

$$0 =Q_{12}-W_{12}+ E_i- E_e \quad (4.3.2.2)$$

$$0 =I*Q-I*W+I_{\text{inlet sections}}dE_i -I_{\text{exit sections}}-dE_e \quad (4.3.2.3)$$

$$0 =*Q-*W + dE_i -dE_e \quad (4.3.2.4)$$

$$0 =Q_{12}/)t-W_{12}/)t +)E_i/)t -)E_e/)t \quad (4.3.2.5)$$

and

$$0 =Qdot-Wdot+ Edot_i -Edot_e \quad (4.3.2.6)$$

The specific form of the First law of thermodynamics of an open system [Equations (4.3.2.2)] becomes

$$0 =q_{12}-w_{12}+ e_i- e_e \quad (4.3.2.7)$$

The First law of thermodynamics for an open system [Equation (4.3.2.2)] expressed in words is

0 = [net heat added to the system] - [net work added to the system] +[energy flow in with mass flow in across the boundary of the open system from the surroundings] + [energy exit (E_e) with mass exit across the boundary of the open system to the surroundings]

In many occasions, the changes of kinetic energy and potential energy are relatively small compared with the change of internal energy and flow energy, Equation (4.3.2.2) is reduced to:

$$0 = q_{12} - w_{12} + h_i - h_e \tag{4.3.2.8}$$

Homework 4.3. First Law of Thermodynamics

1. What is the boundary work of an open system?
2. What is flow energy? Do substances at rest possess any flow energy?
3. What is enthalpy? How does it relate to internal energy and flow energy?
4. Describe energy conservation in words for an open system.
5. In the energy balance equation, $E_2 - E_1 = Q_{12} - W_{12} + E_i - E_e$, what are the subscripts 1, 2, i and e refer to?
6. In the energy balance equation, $E_2 - E_1 = Q_{12} - W_{12} + E_i - E_e$, state the physical meaning of each term.

4.4. CYCLEPAD OPEN SYSTEM DEVICES

Since the majority of engineering devices may be modeled as operating under steady state, steady flow conditions; a major effort of CyclePad is devoted to the analysis of systems with steady state, steady flow processes. The following devices in the open system inventory shop of CyclePad are used to illustrate the usefulness of the general principles and to strengthen our understanding of the basic thermodynamic principles.

The devices in the open system inventory shop of CyclePad are typical devices used in thermodynamics and energy industry. A short statement of each device's purpose, known facts about work and heat transfer, and a common assumption if appropriate is made in the following sections.

4.4.1. Heater (Including Boiler, Steam Generator, Superheater, Combustion Chamber, Burner, Evaporator, Reheater, Preheater and Open Feed Water Heater)

A *heater* is a simple single stream fluid flow through a device where heat is transferred to the fluid from the surroundings. The fluid is heated and may or may not change phases. For example, a boiler is a vapor generator in which a liquid is converted into a vapor by the addition of heat; a steam generator is the same as a boiler that heats liquid pure substance to vapor or superheated vapor phase; a superheater brings a substance temperature over saturated temerature; an evaporator brings a substance to vapor state; a reheater is a heater

used between turbine stages. The heating process tends to occur at constant pressure, since a fluid flowing through the device usually undergoes only a small pressure drop due to fluid friction at the walls. There is no means for doing any shaft or electric work, and changes in kinetic and potential energies are commonly negligible small.

Application of the First law of thermodynamics to a heater gives

$$W=0 \text{ and } Q = m(h_e-h_i) \tag{4.4.1.1}$$

Heaters in various applications are called boiler, superheater, combustion chamber, evaporator, reheater, preheater, open feed water heater, etc. A boiler is a steam generator that receives heat and converts liquid water into water vapor at constant pressure. A superheater raises the temperature of saturated vapor at constant pressure. A combustion chamber is a device into which fuel and air are admitted, the fuel is burned, heat is released, and exhaust gases are discharged. An evaporator is a refrigerant generator that receives heat and converts liquid refrigerant into vapor at constant pressure. A reheater receives heat and raises the temperature of vapor or gas at constant pressure. A pre-heater receives heat and raises the temperature of liquid or gas at constant pressure. An open feed water heater receives heat and raises the temperature of liquid water at constant pressure.

Example 4.4.1.1.

Water at a mass flow rate of 2 lbm/s is heated in a steam boiler from 400 psia and 100EF to 400 psia and 400EF. Find the rate of heat added to the water in the boiler, specific enthalpy change and specific entropy change of the water.

To solve this problem by CyclePad, we take the following steps:

1. Build
   (A) Take a source, a boiler (heater), and a sink from the open-system inventory shop and connect them.
   (B) Switch to analysis mode.
2. Analysis
   (A) Assume the heater as an isobaric process.
   (B) Input the given information: (a) working fluid is water, (b) the inlet pressure and temperature of the boiler are 400 psia and 100EF, (c) the outlet temperature of the boiler is 400EF, and (d) the mass flow rate is 2 lbm/s.
3. Display results

The answers are Qdot=612.4 Btu/s,)h=375.3-69.07=306.2 Btu/lbm, and)s=0.5663-0.1293=0.4370 Btu/[lbm(R)].

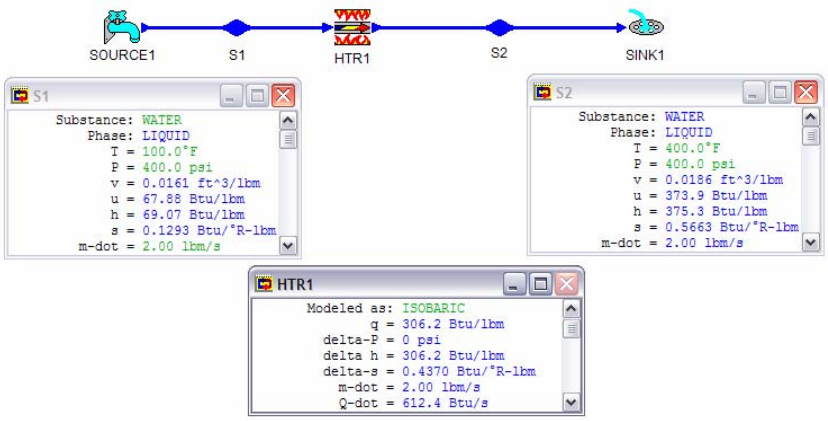

Figure E4.4.1.1. Heater

Example 4.4.1.2.

Air at a mass flow rate of 0.01 lbm/s is heated in a combustion chamber from 150 psia and 100EF to 150 psia and 1200EF. Find the rate of air flow at the exit section, the rate of heat added to the air in the combustion chamber, specific enthalpy change and specific entropy change of the air.

To solve this problem by CyclePad, we take the following steps:

1. Build
   (A) Take a source, a combustion chamber (heater), and a sink from the open-system inventory shop and connect them.
   (B) Switch to analysis mode.
2. Analysis
   (A) Assume the heater as an isobaric process.
   (B) Input the given information: (a) working fluid is air, (b) the inlet pressure and temperature of the combustion chamber are 150 psia and 100EF, (c) the outlet temperature of the combustion chamber is 1200EF, and (d) the mass flow rate is 0.01 lbm/s.
3. Display results

The answers are Vdot=0.0409 ft^3/s, Qdot=2.64 Btu/s,)h=397.8-134.1=263.7 Btu/lbm, and)s=0.6878-0.4272=0.2606 Btu/[lbm(R)].

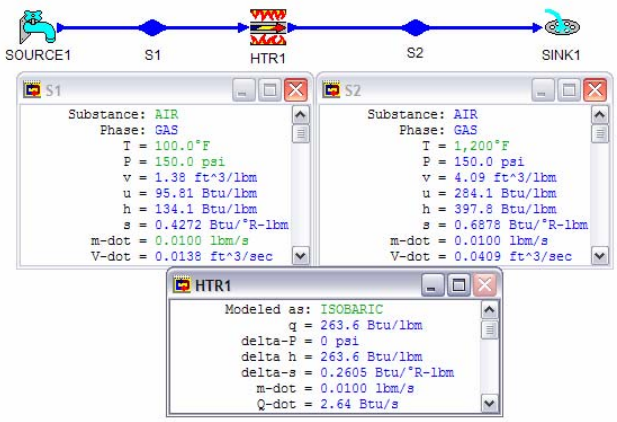

Figure E4.4.1.2. Heater

Example 4.4.1.3.

Freon R-12 at a mass flow rate of 0.001 lbm/s is heated in an evaporator from 36 psia and a quality of 0.2 to saturated vapor. Find the rate of the freon flow at the exit section, the rate of heat added to the freon in the combustion chamber, specific enthalpy change and specific entropy change of the freon.

To solve this problem by CyclePad, we take the following steps:

1. Build
   (A) Take a source, an evaporator (heater), and a sink from the open-system inventory shop and connect them.
   (B) Switch to analysis mode.
2. Analysis
   (A) Assume the heater as an isobaric process.
   (B) Input the given information: (a) working fluid is R-12, (b) the inlet pressure and quality of the evaporator are 36 psia psia and 0.2, (c) the outlet quality of the boiler is 1, and (d) the mass flow rate is 0.001 lbm/s.
3. Display results

The answers are Vdot=0.0011 ft^3/s, Qdot=0.0532 Btu/s,)h=79.41-26.22=53.19 Btu/lbm, and)s=0.1672-0.0563=0.1109 Btu/[lbm(R)].

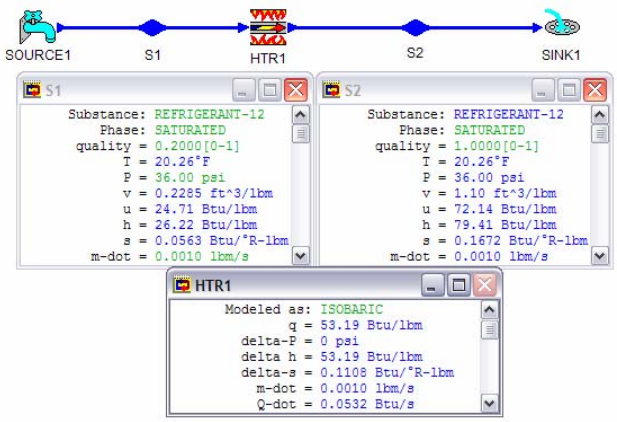

Figure E4.4.1.3. Heater

Homework 4.4.1. Heater

1. 0.1 kg/s of water enters a boiler (heater) at 323 K and 5 Mpa, and leaves as steam at 673 K and 5 Mpa. For steady flow, what is the heat transferred and work added to the boiler?
   ANSWER: 298.2 kW, 0.
2. 0.01 kg/s of air enters a combustion chamber. 1000 kJ/kg of heat transfer is added to the isobaric combustion chamber. The inlet pressure and temperature of the air are 1000 kPa and 50EC and the exit air pressure is 1000 kPa.
   For steady flow, what is the exit temperature and work added to the combustion chamber? What is the specific entropy change of the air between the inlet and exit section?
   ANSWER: 1047EC, 0, 1.41 kJ/[kg(EC)].

4.4.2. Cooler (Including Condenser, Intercooler, Precooler and Aftercooler)

A *cooler* is a simple single stream fluid flow through a device where heat is removed from the fluid to the surroundings. For example, a condenser takes heat out to bring a pure substance from vapor state or saturated mixture state to liquid state; an intercooler is a cooler used between compressor stages. The fluid is cooled and may or may not change phases. The cooling process tends to occur at constant pressure, since a fluid flowing through the device usually undergoes only a small pressure drop due to fluid friction at the walls. There are no means for doing any shaft or electric work, and changes in kinetic and potential energies are commonly, negligibly small.

Application of the First law of thermodynamics to a steady flow steady system cooler gives

$$W=0 \text{ and } Q = m(h_e-h_i) \qquad (4.4.2.1)$$

Coolers in various applications are called condenser, inter-cooler, etc. Heat is removed from a condenser and convert vapor or saturated mixture steam into liquid water at constant pressure. Heat is removed from an inter-cooler and decrease the temperature of gas at constant pressure.

Example 4.4.2.1.

Water at a mass flow rate of 2 kg/s is condensed in a steam condenser from 20 kPa and a quality of 0.9 to saturated liquid. Find the rate of the water flow at the exit section, the rate of heat removed from the water in the condenser, specific enthalpy change and specific entropy change of the water.

To solve this problem by CyclePad, we take the following steps:

1. Build
   (A) Take a source, a condenser (cooler), and a sink from the open-system inventory shop and connect them.
   (B) Switch to analysis mode.
2. Analysis
   (A) Assume the condenser as an isobaric process.
   (B) Input the given information: (a) working fluid is water, (b) the inlet pressure and quality of the condenser are 20 kPa and 0.9, (c) the outlet quality of the condenser is 0, and (d) the mass flow rate is 2 kg/s.
3. Display results

The answers are Vdot=0.002 m^3/s, Qdot=-4243 kW,)h=-2122 kJ/kg,, and)s=-6.37 kJ/[kg(K)].

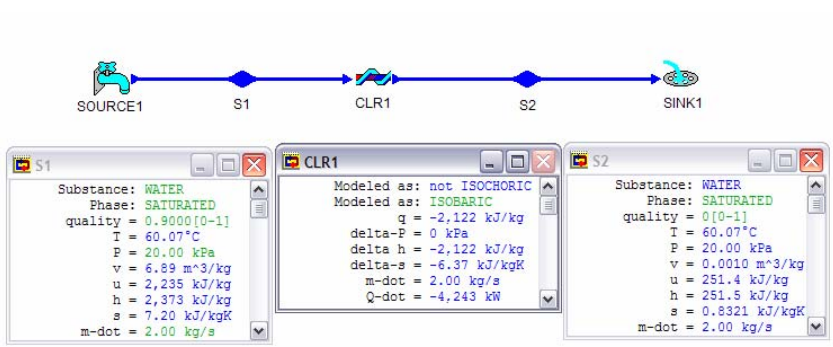

Figure E4.4.2.1. Cooler

Example 4.4.2.2.

Freon R-12at a mass flow rate of 0.02 kg/s is condensed in a condenser from 900 kPa and 40EC to saturated liquid. Find the rate of heat removed from the water in the condenser, specific enthalpy change and specific entropy change of the water.

To solve this problem by CyclePad, we take the following steps:

1. Build
   (A) Take a source, a condenser (cooler), and a sink from the open-system inventory shop and connect them.
   (B) Switch to analysis mode.
2. Analysis
   (A) Assume the condenser as an isobaric process.
   (B) Input the given information: (a) working fluid is R-12, (b) the inlet pressure and temperature of the condenser are 900 psia and 40EC, (c) the outlet quality of the condenser is 0, and (d) the mass flow rate is 0.02 kg/s.
3. Display results

The answers are Qdot=-2.64 kW,)h=-132.2 kJ/kg,, and)s=-0.4347 kJ/[kg(K)].

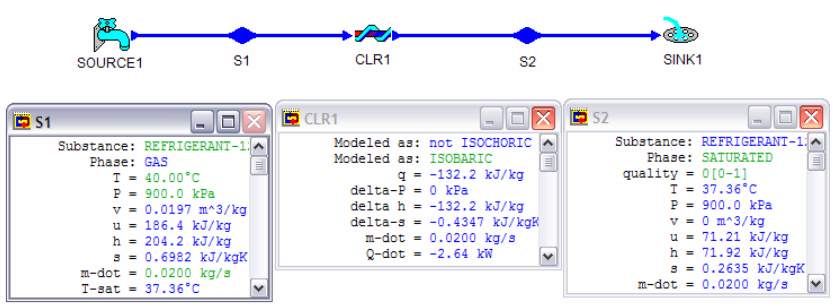

Figure E4.4.2.2. Cooler

Homework 4.4.2. Cooler

1. Ammonia enters a condenser operating at a steady state at 225 psia and 600ER and is condensed to saturated liquid at 225 psia; on the outside of tubes through which cooling water flows. The volumetric flow rate of the ammonia is 2 ft^3/s. Neglect heat transfer and kinetic energy effects. Determine (A) the mass flow rate of ammonia in lbm/s, and (B) the rate of energy transfer from the condensing ammonia to the cooling water, and (C) the specific entropy change of the ammonia between the inlet and exit section.
   ANSWER: (A) 1.34 lbm/s, (B) -617.2 Btu/s, (C) -0.8872 Btu/[lbm(ER)].
2. Steam enters a condenser (cooler) at a pressure of 1 psia and 90% quality. It leaves the condenser as a saturated liquid at 1 psia. For a flow rate of 75 lbm/s of steam, determine the heat removed from the steam, the temperature of the ammonia at the exit section, the specific enthalpy change of the ammonia between the inlet and exit section., and the specific entropy change of the ammonia between the inlet and exit section..
   ANSWER: -69910 Btu, 561.4 ER, -932.1 Btu/lbm, -1.66 Btu/[lbm(ER)].

4.4.3. Compressor

The purpose of a *compressor* is to compress a gas or a vapor from a low pressure inlet state to a high pressure exit state by utilizing mechanical work. In general, since the compressor work is Ivdp, this requires much more work than pumping liquid, and the working fluid experiences a significant increase in temperature. Compressors use gases or vapors as their working fluids. Compressors are not supposed to handle wet saturated vapors (saturated two-phase vapor and liquid mixtures), as such fluids cause excessive wear. In a household refrigerator, a compressor is used to raise the pressure of the refrigerant vapor; in a jet engine, a compressor is used to raise the pressure of the inlet air stream. A compressor is usually modeled as adiabatic.

A supercharger is a compressor driven by engine shaft work to drive air into an automotive engine. A turbocharger is a compressor driven by an exhaust flow turbine to charge air into an engine. A fan or blower moves a vapor or gas (typically air) from a low pressure inlet state to a high pressure exit state by utilizing mechanical work. The pressure difference across a fan or blower is lower that of a compressor.

Generally, changes between inlet and outlet kinetic and potential energies are very small in comparison with changes in enthalpy. Application of the First law of thermodynamics to a steady flow steady system compressor gives

$$Q=0 \text{ and } W = m(h_i-h_e) \qquad (4.4.3.1)$$

The adiabatic assumption is reasonable because the heat transfer surface area of the compressor is relatively small, and the length of time required for the working fluid to pass through the compressor is short. Therefore the ideal compression process is considered to be a reversible and adiabatic or isentropic one. Comparison between the actual and the ideal compressor performance is given by the compressor efficiency, 0. Since it requires more actual work to drive an actual compressor than the ideal work to drive an isentropic compressor, the compressor efficiency, 0, is defined as

$$0=w_{isentropic}/w_{actual} \qquad (4.4.3.2)$$

Example 4.4.3.1

Freon R-134a at a mass flow rate of 0.015 kg/s enters an adiabatic compressor at 200 kPa and -10EC and leaves at 1 MPa and 70EC. The power input to the compressor is 1 kW. Determine the heat transfer loss from the compressor, specific enthalpy change and specific entropy change of the R-134a**.**

To solve this problem by CyclePad, we take the following steps:

1. Build
   (A) Take a source, a compressor, and a sink from the open-system inventory shop and connect them.
   (B) Switch to analysis mode.
2. Analysis

(A) Input the given information: (a) working fluid is R-134a, (b) the inlet pressure and temperature of the compressor are 200 kPa and -10EC, (c) the outlet pressure and temperature of the compressor are 1 MPa and 70EC, (d) the mass flow rate is 0.015 kg/s, and (e) the shaft power of the compressor is 1 kW.

3. Display results

The answers are Qdot=-0.1000 kW,)h=60.00 kJ/kg,, and)s=0.0799 kJ/[kg(K)].

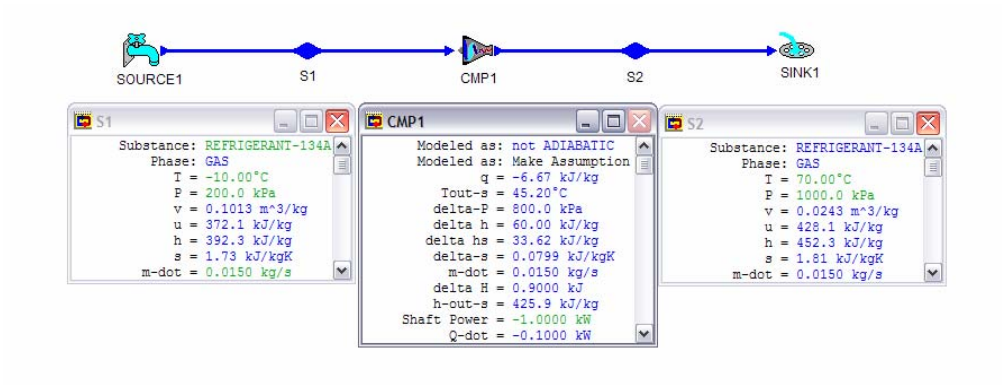

Figure E4.4.3.1. Freon Compressor

Example 4.4.3.2.

Air at a mass flow rate of 0.15 kg/s enters an adiabatic compressor at 100 kPa and 10EC and leaves at 1 MPa and 280EC. Find the rate of the air flow at the exit section, the power added to the air, specific enthalpy change, specific entropy change of the air, and efficiency of the compressor..

Determine the power input to the compressor.

To solve this problem by CyclePad, we take the following steps:

1. Build
   (A) Take a source, a compressor, and a sink from the open-system inventory shop and connect them.
   (B) Switch to analysis mode.
2. Analysis
   (A) Assume the compressor is adiabatic.
   (B) Input the given information: (a) working fluid is air, (b) the inlet pressure and temperature of the compressor are 100 kPa and 10EC, (c) the outlet pressure and temperature of the compressor are 1 MPa and 280EC, and(d) the mass flow rate is 0.15 kg/s.
3. Display results

The answers are Vdot=0.0238 m^3/s, Wdot=-40.64 kW,)h=270.9 kJ/kg,,)s=0.0118 kJ/[kg(K)], and 0=97.60%..

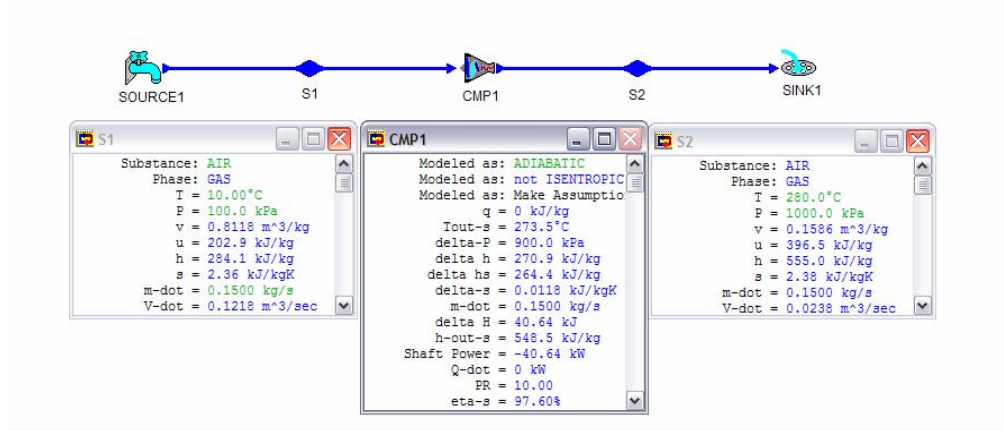

Figure E4.4.3.2. Compressor

Example 4.4.3.3.

Air at a mass flow rate of 0.15 kg/s enters an isentropic compressor at 100 kPa and 10EC and leaves at 1 MPa. Find the temperature of air at exit section, the rate of the air flow at the exit section, the power added to the air, specific enthalpy change, specific entropy change of the air, and efficiency of the compressor.

Determine the power input to the compressor.

To solve this problem by CyclePad, we take the following steps:

1. Build
   (A) Take a source, a compressor, and a sink from the open-system inventory shop and connect them.
   (B) Switch to analysis mode.
2. Analysis
   (A) Assume the compressor is adiabatic and isentropic.
   (B) Input the given information: (a) working fluid is air, (b) the inlet pressure and temperature of the compressor are 100 kPa and 10EC, (c) the outlet pressure and temperature of the compressor are 1 MPa and 280EC, and(d) the mass flow rate is 0.15 kg/s.
3. Display results

The answers are T=273.5EC, Vdot=0.0235 m^3/s, Wdot=-39.66 kW,)h=264.4 kJ/kg,,)s=0 kJ/[kg(K)],and 0=100%.

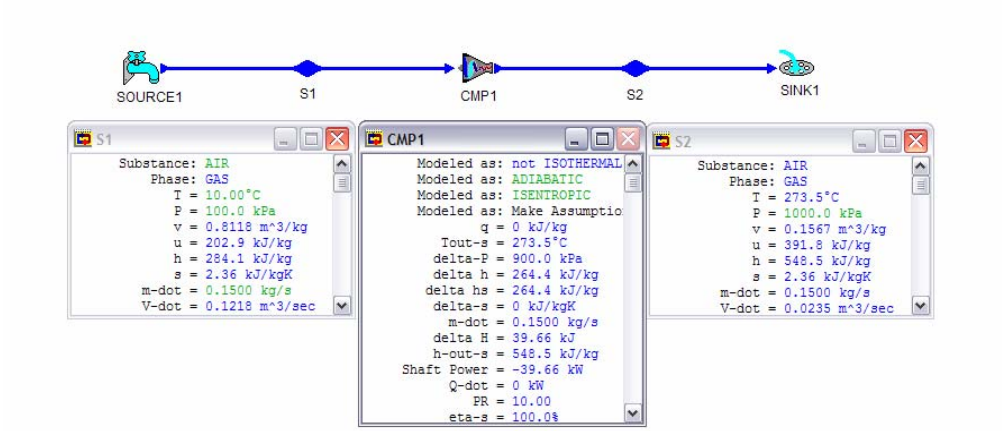

Figure E4.4.3.3. Compressor

Comments: Comparing Ex.4.4.3.3 and Ex.4.4.3.2, we see that:

1. *$Wdot_{isentropic}$ (-39.66 kW) is less than $Wdot_{adiabatic}$(-40.64 kW);*
2. *$(Texit)_{sentropic}$(273.5EC) is lower than $(Texit)_{adiabatic}$(280EC)*
3. *$()s)_{isentropic}$=0 and $()s)_{adiabatic}$=0.0118 kJ/[kg(K)]*
4. *$0_{isentropic}$(100%) is larger than $0_{isentropic}$(97.60%).*

Homework 4.4.3. Compressor

1. What is the function of a compressor?
2. What is the difference between a compressor and a pump?
3. Do you expect the pressures of air at the compressor inlet and exit to be the same?
4. Do you expect the temperatures of air at the compressor inlet and exit to be the same? Why?
5. Do you expect the specific volumes of air at the compressor inlet and exit to be the same? Why?
6. Does the mass rate flow at the inlet of a steady flow compressor the same as that at the exit of the compressor?7. Refrigerant R-134a enters an adiabatic compressor as saturated vapor at -20EC and leaves at 0.7 Mpa and 70EC. The mass flow rate of the refrigerant is 2.5 kg/s. Determine (A) the power input to the compressor and (B) the volume flow rate at the compressor inlet.
   ANSWER: (A) -176.6 kW, (B) 0.3662 m^3/s.
7. A compressor receives air at 100 kPa and 300 K and discharges it to 400 kPa and 480 K. The mass flow rate of the air is 15 kg/s. The heat transfer from the compressor to its surroundings is 8.5 kW. Determine the specific work and power required to run this compressor.
   ANSWER: -180.6 kJ/kg, -2709 kW.
8. A well insulted compressor takes in air at 520 R and 14.7 psia with a volumetric flow rate of 1200 ft^3/min, and compresses it to 960 R and 120 psia. Determine the compressor power and the volumetric flow rate at the exit.

ANSWER: -228 hp, 4.52 ft^3/s.

9. A compressor increases the pressure of 3 lbm/s of air from 15 psia to 150 psia. If the specific enthalpy of the entering air is 150 Btu/lbm and that of the exiting air is 300 Btu/lbm. Determine how much power is required to drive the compressor if 1.53 Btu/lbm of heat is lost in the process.
   ANSWER: -643.2 hp.
10. Air enters a compressor at 100 kPa and an specific enthalpy of 240 kJ/kg. The air leaves the compressor at 400 kPa and an enthalpy of 432 kJ/kg. If the heat loss to the atmosphere is 2 kJ/kg of air, how much work is required per kg of air.
    ANSWER: -190.4 kJ/kg.
11. A compressor takes in air at 300 K and 1 bar and delivers compressed air at 4 bar and consuming 400 W of useful power. If the compression is reversible and adiabatic, what volume rate of flow in cm^3/s will it deliver, and at what temperature?
    ANSWER: Vdot=873.6 cm^3/s, T=445.8 K.

4.4.4. Turbine

Turbines are high-speed rotating devices used to produce work. In a turbine, much of the energy content of a high-pressure, high-temperature working fluid passing through the turbine is expanded and mechanical shaft work is produced. For example, in a power plant, steam at high pressure and temperature is used to turn a series of turbine wheels, each wheel consisting of curved blades mounted on a shaft. Turbines consist of a set of rotor blades interleaved with a set of stationary blades or stators. Working fluid in a turbine is expanded from a high pressure and high temperature inlet state to a low pressure exit state. The temperature of the working fluid also drops during the expansion process. The fluid entering the turbine must be either dry saturated steam or gas. Wet saturated vapors (saturated two-phase vapor and liquid mixtures) will seriously erode the turbine blades. A turbine is usually modeled as adiabatic.

An expander is similar to a turbine that creates shaft work from high pressure fluid flow, but may have heat transfer with its surroundings.

Generally, changes between inlet and outlet kinetic and potential energies are very small in comparison with changes in enthalpy. Application of the First law of thermodynamics to a steady flow steady system compressor gives

$$Q=0 \text{ and } W = m(h_i-h_e) \qquad (4.4.4.1)$$

The adiabatic assumption is reasonable because the heat transfer surface area of the turbine is relatively small, and the length of time required for the working fluid to pass through the turbine is short. As a result, the ideal expansion process is considered to be reversible and adiabatic, or isentropic. Comparison between the actual and the ideal turbine performance is given by the turbine efficiency, 0. Since an ideal turbine produces more isentropic work than the actual work by an actual adiabatic turbine, the turbine efficiency, 0, is defined as

$$0=w_{actual}/ w_{isentropic} \qquad (4.4.4.2)$$

Example 4.4.4.1.

Air at a mass flow rate of 0.15 kg/s enters an adiabatic turbine at 1000 kPa and 1100EC and leaves at 100 kPa and 500EC. Determine the enthalpy change and entropy change of the air. Find the efficiency and power ouput to the turbine.

To solve this problem by CyclePad, we take the following steps:

1. Build
   (A) Take a source, a turbine, and a sink from the open-system inventory shop and connect them.
   (B) Switch to analysis mode.
2. Analysis
   (A) Assume the turbine is isentropic and adiabatic.
   (B) Input the given information: (a) working fluid is air, (b) the inlet pressure and temperature of the turbine are 1000 kPa and 1100EC, (c) the outlet pressure and temperature of the turbine are 100 kPa and 500EC, and(d) the mass flow rate is 0.15 kg/s.
3. Display results

The answers are)h=-602.0 kJ/kg,)s=3.37-3.29=0.08 kJ/[kg(K)], 0=90.64% and Wdot=90.31 kW.

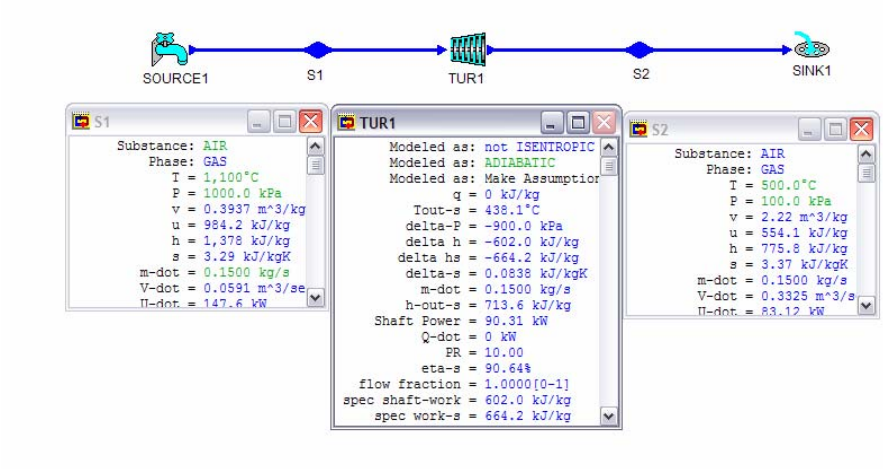

Figure E4.4.4.1. Turbine

Example 4.4.4.2.

Air at a mass flow rate of 0.15 kg/s enters an isentropic turbine at 1000 kPa and 1100EC and leaves at 100 kPa. Determine the enthalpy change and entropy change of the air. Find the efficiency and power ouput to the turbine.

To solve this problem by CyclePad, we take the following steps:

1. Build
   (A) Take a source, a turbine, and a sink from the open-system inventory shop and connect them.

(B) Switch to analysis mode.

2. Analysis
   (A) Assume the turbine is isentropic.
   (B) Input the given information: (a) working fluid is air, (b) the inlet pressure and temperature of the turbine are 1000 kPa and 1100EC, (c) the outlet pressure and temperature of the turbine are 100 kPa and 500EC, and(d) the mass flow rate is 0.15 kg/s.
3. Display results

The answers are)h=-664.2 kJ/kg,)s=3.29-3.29=0 kJ/[kg(K)], 0=100% and Wdot=99.63 kW.

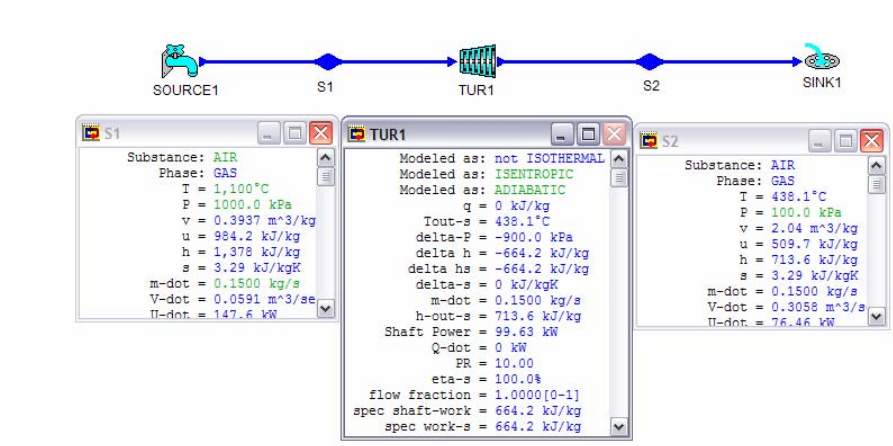

Figure E4.4.4.2. Turbine

Comments: Comparing Ex.4.4.4.1 and Ex.4.4.4.2, we see that:

1. *$Wdot_{isentropic}$ (99.63 kW) is more than $Wdot_{adiabatic}$(90.31 kW);*
2. *$(Texit)_{sentropic}$(438.1EC) is lower than $(Texit)_{adiabatic}$(500EC)*
3. *$()s)_{isentropic}$=0 and $()s)_{adiabatic}$=0.08 kJ/[kg(K)]*
4. *$0_{isentropic}$(100%) is larger than $0_{isentropic}$(97.60%).*

Example 4.4.4.3.

The shaft power produced by an adiabatic steam turbine is 100 Mw. Steam enters the adiabatic turbine at 4000 kPa and 500EC and leaves at 10 kPa and a quality of 0.9. Determine the rate of steam flow through the turbine, the entropy change of the steam, and efficiency of the turbine.

To solve this problem by CyclePad, we take the following steps:

1. Build
   (A) Take a source, a turbine, and a sink from the open-system inventory shop and connect them.
   (B) Switch to analysis mode.

2. Analysis
   (A) Assume the turbine is adiabatic, and the shaft power is 100,000 kW..
   (B) Input the given information: (a) working fluid is water, (b) the inlet pressure and temperature of the turbine are 4000 kPa and 500EC, and (c) the outlet pressure and quality of the turbine are 10 kPa and 0.9.
3. Display results

The answers are mdot=90.84 kg/s,)s=7.40-7.09=0.31 kJ/[kg(K)], 0=91.80%.

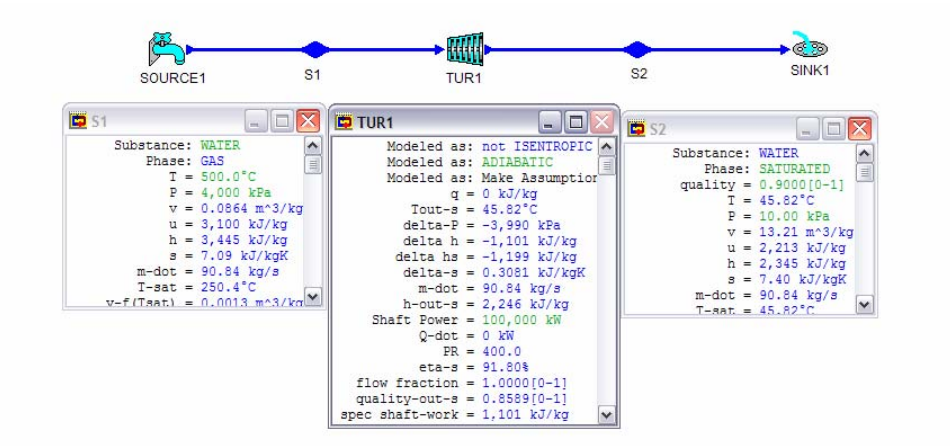

Figure E4.4.4.3. Turbine

Example 4.4.4.4.

The shaft power produced by an isentropic steam turbine is 100 Mw. Steam enters the turbine at 4000 kPa and 500EC and leaves at 10 kPa. Determine the quality of steam at the exit section, rate of steam flow through the turbine, the entropy change of the steam, and efficiency of the turbine.

To solve this problem by CyclePad, we take the following steps:

1. Build
   (A) Take a source, a turbine, and a sink from the open-system inventory shop and connect them.
   (B) Switch to analysis mode.
2. Analysis
   (A) Assume the turbine is isentropic and adiabatic, and the shaft power is 100,000 kW..
   (B) Input the given information: (a) working fluid is water, (b) the inlet pressure and temperature of the turbine are 4000 kPa and 500EC, and (c) the outlet pressure of the turbine are 10 kPa.
3. Display results

The answers are x=0.8589, mdot=83.40 kg/s,)s=7.09-7.09=0 kJ/[kg(K)], and 0=100%.

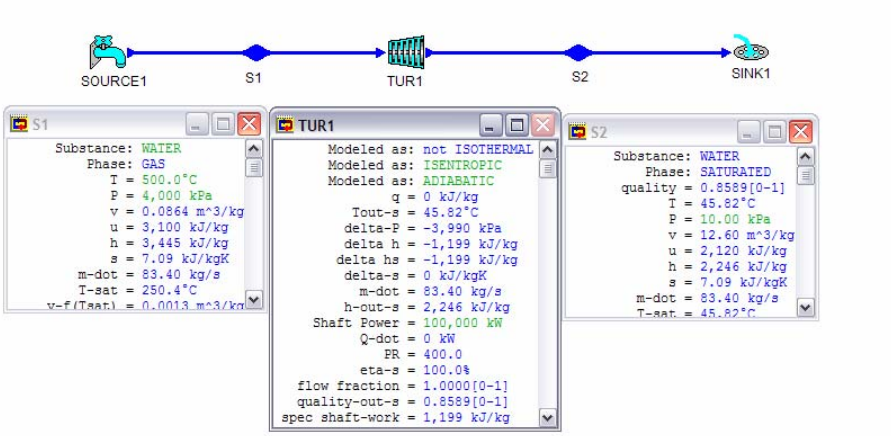

Figure E4.4.4.4. Turbine

Homework 4.4.4. Turbine

1. 3 lbm/s of steam enters a steady-state steady-flow adiabatic turbine at 3000 psia and 1000EF. It leaves the turbine at 1 psia with a quality of 0.74. Determine the power produced by the turbine.
   ANSWER: 2563 hp.
2. A steam turbine is designed to have a power output of 9 MW for a mass flow rate of 17 kg/s. The inlet state is 3 Mpa and 450 C, and the outlet state is 0.5 Mpa and saturated vapor. What is the heat transfer for this turbine?
   ANSWER: -1121 kW.
3. Steam enters a turbine at steady state with a mass flow rate of 2 kg/s. The turbine developes a power output of 1000 kW. At the inlet, the temperature is 400EC and the pressure is 6000 kPa. At the exit, the pressure is 10 kPa and the quality is 90%. Calculate the rate of heat transfer between the turbine and its surroundings.
   ANSWER: -664.8 kW.
4. 50 lbm/s of steam enters a turbine at 700EF and 600 psia, and leaves at 0.6 psia with a quality of 90%. The heat transfer from the turbine to the surroundings is 2.5×10^6 Btu/hr. Determine the power developed by the turbine.
   ANSWER: 24252 hp.
5. The mass rate of flow into a steam turbine is 1.5 kg/s, and the heat transfer from the turbine to its surroundings is 8.5 kW. The steam is 2 Mpa and 350EC at the inlet, and 0.1 Mpa and saturated (100% quality) at the exit. Determine the specific work and power produced by the turbine.
   ANSWER: 455.8 kJ/kg, 683.8 hp.
6. Air expands through a turbine from 1000 kPa and 900 K to 100 kPa and 500K. The turbine operates at steady state and develops a power output of 3200 kW. Neglect heat transfer and kinetic energy effects. Determine the mass flow rate in kg/s.
   ANSWER: 7.97 kg/s.

7. A ship's steam turbine receives steam at a pressure of 900 psia and 1000EF. The steam leaves the turbine at 2 psia and 114EF. Find the power produced if the mass flow rate is 3 lbm/s and the heat loss from the turbine is 12 Btu/s.
   ANSWER: 6040 hp.
8. A steam turbine produces 6245 hp. At the entrance to the turbine, the pressure is 1000 psia and specific volume is 0.667 ft^3/lbm. At the exit of the turbine, the pressure is 5 psia and specific volume is 40 ft^3/lbm. If 0.578 Btu/lbm of heat is lost to the environment through the turbine casing, determine the required steam flow rate.
   ANSWER: 6.44 ft^3/s.
9. Superheated steam enters a turbine at 700 psia and 700EF, and leaves as a dry saturated vapor at 10 psia. The mass flow rate is 20 lbm/s and the heat loss from the turbine is 14 Btu/lbm. Find the power output of the turbine.
   ANSWER: 5293 hp.
10. Steam initially at a pressure of 500 psia and a quality of 92% expands isentropically to a pressure of 1 psia. Determine the final quality and moisture content of the steam, and the specific work of the turbine.
    ANSWER: 0.6864, 0.3136, 363.9 Btu/lbm.
11. Steam at a pressure of 800 psia and 650EF is expanded isentropically to a pressure of 14.7 psia. Determine the exit enthalpy of the steam, and the specific work of the turbine.
    ANSWER: 990.5 Btu/lbm, 314.7 Btu/lbm.
12. Steam at a pressure of 1200 psia and 900EF is expanded isentropically to a pressure of 2 psia. Determine the final enthalpy and temperature of the steam.
    ANSWER: 921.5 Btu/lbm, 126.0EF.
13. Superheated steam at 400 psia and 700EF is expanded in an isentropic turbine to a pressure of 100 psia. Determine the final enthalpy and temperature of the steam.
    ANSWER: 1222 Btu/lbm, 390.8EF.

4.4.5. Pump

The purpose of a *pump* is to compress a liquid from a low pressure inlet state to a high pressure exit state by utilizing mechanical work. Pump has the same function as compressor, but handles liquid. Ideal adiabatic pump work is Ivdp. Therefore, pumping a liquid is more efficient than compressing a gas, because one can pump a great deal more liquid per unit volume, and liquids, being basically incompressible, do not gain an appreciable amount of heat during the pumping process. A pump can not handle gases or saturated vapors, because such fluids tend to cavitate, or boil. Cavitation causes excessive shocks within the pump and can rapidly lead to pump failure. A pump is usually modeled as adiabatic.

Generally, changes between inlet and outlet kinetic and potential energies are very small in comparison with changes in enthalpy. Application of the First law of thermodynamics to a steady flow steady system pump gives

$$Q=0 \text{ and } W = m(h_i-h_e) \qquad (4.4.5.1)$$

Since liquid is an incompressible substance and liquid temperature change across the pump is negligible, Eq. (4.4.5.1) can be reduced to

$$W = mv(p_i - p_e) \tag{4.4.5.2}$$

The adiabatic assumption is reasonable because the heat transfer surface area of the pump is relatively small, and the length of time required for the working fluid to pass through the pump is short. Therefore the ideal pumping process is considered to be a reversible and adiabatic or isentropic one. Comparison between the actual and the ideal pump performance is given by the isentropic efficiency, 0. Since it requires more actual work to drive an actual pump than the ideal work to drive an isentropic pump, the pump efficiency, 0, is defined as

$$0 = w_{isentropic}/w_{actual} \tag{4.4.5.3}$$

Example 4.4.5.1.

Saturated water at a mass flow rate of 1 kg/s enters an adiabatic pump at 10 kPa and leaves at 4000 kPa and 46EC. Determine the entropy change of the water, efficiency of the pump and the power required for the pump.

To solve this problem by CyclePad, we take the following steps:

1. Build
   (A) Take a source, a pump, and a sink from the open-system inventory shop and connect them.
   (B) Switch to analysis mode.
2. Analysis
   (A) Assume the pump is adiabatic and isentropic.
   (B) Input the given information: (a) working fluid is water, (b) pressure and quality of the water at the pump inlet are 10 kPa and 0, (c) the pressure and of the water at the pump outlet are 4000 kPa and, and(d) the mass flow rate is 1 kg/s.
3. Display results

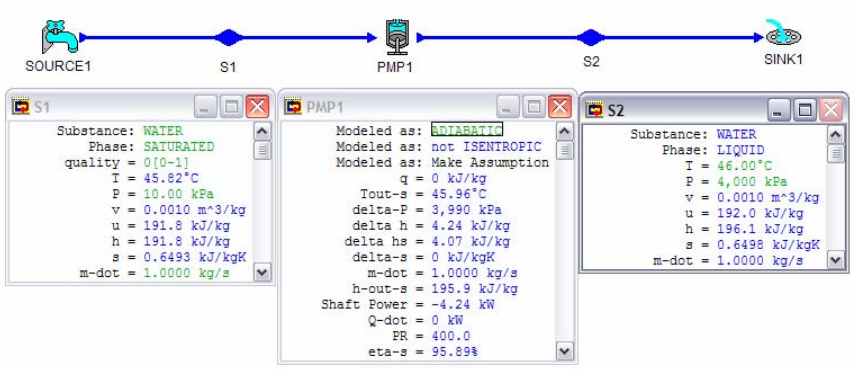

Figure E4.4.5.1. Pump

The answers are)s=0.6498-0.6493=0.0005 kJ/[kg(K)], 0=95.89% and Wdot=-4.24 kW.

Example 4.4.5.2.

Saturated water at a mass flow rate of 1 kg/s enters an isentropic pump at 10 kPa and leaves at 4000 kPa. Determine the entropy change of the water, the efficiency of the pump and the power required for the pump.

To solve this problem by CyclePad, we take the following steps:

1. Build
   (A) Take a source, a pump, and a sink from the open-system inventory shop and connect them.
   (B) Switch to analysis mode.
2. Analysis
   (A) Assume the pump is adiabatic.
   (B) Input the given information: (a) working fluid is water, (b) pressure and quality of the water at the pump inlet are 10 kPa and 0, (c) the pressure and of the water at the pump outlet are 4000 kPa and, and(d) the mass flow rate is 1 kg/s.
3. Display results

The answers are)s=0.6493-0.6493=0 kJ/[kg(K)], 0=100% and Wdot=-4.07 kW.

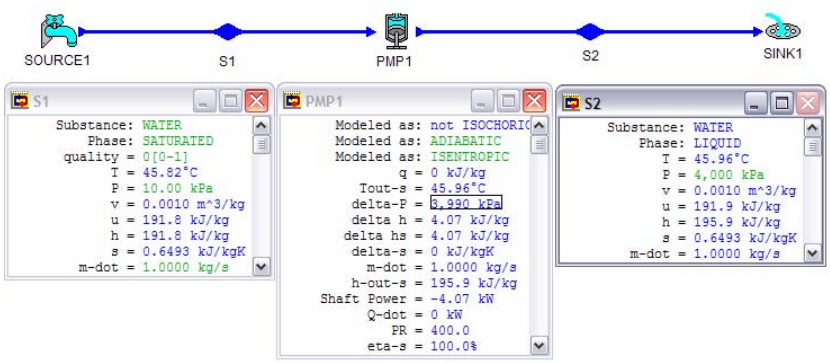

Figure E4.4.5.2. Pump

Comments: Comparing Ex.4.4.5.1 and Ex.4.4.5.2, we see that:

1. *$Wdot_{isentropic}$ (-4.07 kW) is less than $Wdot_{adiabatic}$(-4.24 kW);*
3. *$()s)_{isentropic}$=0 and $()s)_{adiabatic}$=0.005 kJ/[kg(K)]*
4. *$0_{isentropic}$(100%) is larger than $0_{isentropic}$(95.89%).*

Homework 4.4.5. Pump

1. The reversible pump or compressor work is known to be Ivdp. Is the order of magnitude of v important in determining how much pump or compressor work input must be needed?

2. Why the pump work is much less than the compressor work?
3. Pump work in a Rankine steam power plant is usually negligible comparing with turbine work. Would pump work still be negligible if we pump steam vapor?
4. The exhaust from the steam turbine in a Rankine steam power plant is mostly vapor. We want vapor supply to the turbine. Why then do we go to the trouble of condensing the steam and then reboiling it? Why not just pump it back to the high pressure, and heat added, and send it back to the turbine?
5. Water enters a steady-state steady-flow isentropic pump as saturated liquid at 40EC. It leaves the pump at 20 Mpa. Determine the pump specific work required.
   ANSWER: 20.09 kJ/kg.
6. An adiabatic pump pumps 10 kg/s of water from 100 kPa and 20EC to 1100 kPa and 20.03EC. Find the power input to the pump.
   ANSWER: 10.65 kW.
7. An adiabatic pump pumps 10 lbm/s of water from 14.7 psia and 60EF to 214.7 psia and 60.1EF. Find the power input to the pump.
   ANSWER: -9.42 hp.

4.4.6. Mixing Chamber

A *mixing chamber* is a device to mix two or more streams of fluids into one stream. The mixing chamber does not have to be a distinct chamber. An ordinary T-elbow in a shower, for example, serves as a mixing chamber for the cold- and hot-water stream. Mixing chambers are usually well insulated (Q=0) and do not involve electric or shaft work. Also, the kinetic and potential energies of the working fluid streams are usually negligible. A desuperheater adds liquid water to superheated vapor pure substance to make it saturated vapor. A desuperheater is usually considered to be an isobaric process. A feedwater heater heats liquid pure substance with another flow and is usually considered to be an isobaric process. A humidifier adds water to a water-air mixture and is usually considered to be an isobaric process.

Generally, changes between inlet and outlet kinetic and potential energies are very small in comparison with changes in enthalpy. Application of the mass balance equation and the First law of thermodynamics to a steady flow steady state mixing chamber gives that the total mass rate flow in at the inlets is equal to the total mass rate flow out at the exit of the mixing chamber, and the total enthalpy rate flow in at the inlets is equal to the total enthalpy rate flow out at the exit of the mixing chamber.

$$3(\text{mdot})_{in} = 3(\text{mdot})_{out} \tag{4.4.6.1}$$

and

$$3[(\text{mdot})_{in}\,(h_{in})] = 3[(\text{mdot})_{out}\,(h_{out})] \tag{4.4.6.2}$$

Example 4.4.6.1.

Consider an ordinary shower where hot water at 15 psia and 140EF is mixed with cold water at 15 psia and 60EF. It is desirable that a steady stream of warm water at 15 psia and

100EF, and 0.1 lbm/s be supplied, Determine the mass flow rates of the hot water and the cold water.

To solve this problem by CyclePad, we take the following steps:

1. Build
   (A) Take two sources, a mixing chamber, and a sink from the open-system inventory shop and connect them.
   (B) Switch to analysis mode.
2. Analysis
   (A) Assume the mixing chamber is isobaric.
   (B) Input the given information: (a) working fluids are water, (b) pressure and temperature of the hot water at the inlet are 15 psia and 140EF, (c) pressure and temperature of the cold water at the inlet are 15 psia and 60EF, (c) the mass flow rate, pressure and temperature of the mixed water at the mixing chamber outlet are 0.1 lbm/s, 15 psia and 100EF.
3. Display results

The answers are mdot,hot=0.05 lbm/s and mdot,cold=0.05 lbm/s.

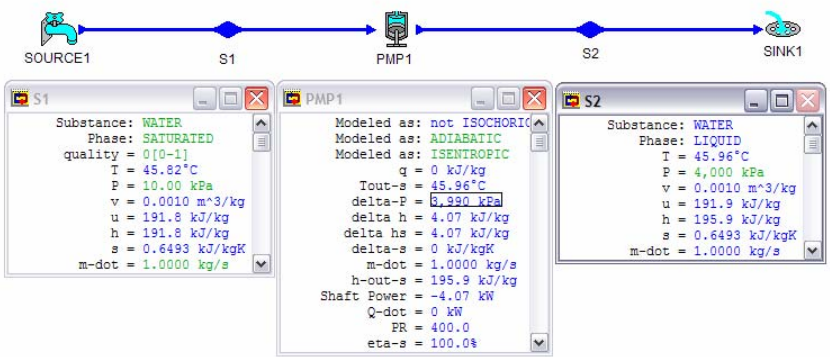

Figure E4.4.6.1. Mixing chamber

Example 4.4.6.2.

A flow rate of 2 kg/s of hot water at 100 kPa and 60EC is mixed with 3 kg/s of cold water at 100 kPa and 15EC. Determine the mass flow rate and temperature of the mixed water.

To solve this problem by CyclePad, we take the following steps:

1. Build
   (A) Take two sources, a mixing chamber, and a sink from the open-system inventory shop and connect them.
   (B) Switch to analysis mode.
2. Analysis
   (A) Assume the mixing chamber is isobaric.

(B) Input the given information: (a) working fluids are water, (b) mass flow rate, pressure and temperature of the hot water at the inlet are 2 kg/s, 100 kPa and 60EC, (c) mass flow rate, pressure and temperature of the cold water at the inlet are 3 kg/s, 100 kPa and 15EC.

3. Display results

The answers are mdot,mix=5 kg/s and T=33EC.

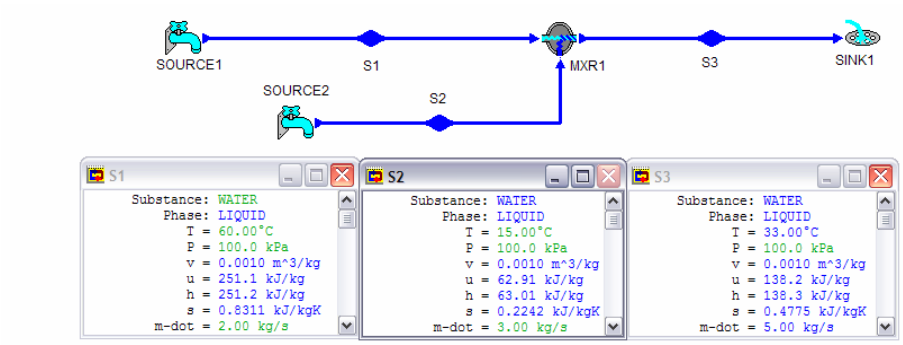

Figure E4.4.6.2. Mixing chamber

Example 4.4.6.3.

A flow rate of 4.41 lbm/s of hot air at 15 psia and 540EF is mixed with 100 ft^3/s of cold air at 15 psia and 20EF. Determine the mass flow rate, volumetric flow rate and temperature of the mixed air.

To solve this problem by CyclePad, we take the following steps:

1. Build
   (A) Take two sources, a mixing chamber, and a sink from the open-system inventory shop and connect them.
   (B) Switch to analysis mode.
2. Analysis
   (A) Assume the mixing chamber is isobaric.
   (B) Input the given information: (a) working fluids are air, (b) mass flow rate, pressure and temperature of the hot air at the inlet are 2 kg/s, 15 psia and 540EF, (c) mass flow rate, pressure and temperature of the cold air at the inlet are 3 kg/s, 15 psia and 20EF.
3. Display results

The answers are Vdot=208.7 ft^3/s, mdot,mix=12.86 lbm/s and T=198.3 EF.

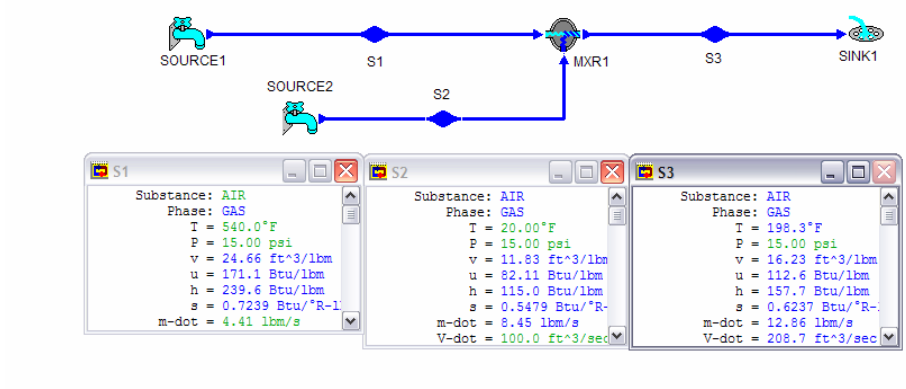

Figure E4.4.6.3. Mixing chamber

Homework 4.4.6. Mixing Chamber

1. Is a mixing process reversible or irreversible?
2. When two fluid streams are mixed in a mixing chamber without chemical reaction. Can the mixture temperature be higher than the temperature of both streams?
3. Water at 80EF and 50 psia is heated in a chamber by mixing it with saturated water vapor at 50 psia. If both streams enter the isobaric mixing chamber at the same flow rate, determine the temperature and quality of the exit steam..
   ANSWER: 281.0EF, 0.3906.
4. 0.1 kg/s of saturated water (x=0) at 600 kPa is injected into 1 kg of saturated steam (x=1) at 1400 kPa in an adiabatic mixing process. Find the enthalpy of the mixture. If the mixed stream pressure is 1000 kPa, what is the temperature and quality of the mixture?
   ANSWER: 179.9EC, 0.9102.
5. A mixing chamber operating at steady state has two inlets and one exit. At inlet 1, 40 kg/s of water vapor enters at 700 kPa and 200EC. At inlet 2, water enters at 700 kPa and 40EC. Saturated vapor at 700 kPa exits at exit 3. Determine the mass flow rate at inlet 2 and at the exit 3. Find the rate of entropy change of the mixing chamber.
   ANSWER: 1.25 kg/s, 41.25 kg/s, 0.5445 kW/K.
6. A 5 lb/s stream of cold water at 40 F and 14.7 psia is to be heated by a hot water flow of 3 lb/s at 180 F and 14.7 psia in a steady flow mixing process. What is the resultant temperature and quality of the mixed stream?
   ANSWER: 92.49EC, n/a.
7. A stream of water at 50 psia and 70EF is mixed in an adiabatic mixing chamber with steam at 50 psia, 200 lbm/s and 500EF. The mixture leaves the chamber at 50 psia and saturated vapor. Determine the mass flow rate of saturated vapor leaving the chamber.
   ANSWER: 219.2 lbm/s.
8. In a mixing chamber three streams of steam are coming in and one stream of steam is going out. The mass flow rates and properties of these steam streams are: $mdot_{in1}$=0.2 kg/s, p_{in1}=500 kPa, T_{in1} =500 K; $mdot_{in2}$=0.1 kg/s, p_{in2}=500 kPa, T_{in1} =400 K;

$mdot_{in3}$=0.14 kg/s, p_{in3}=500 kPa, T_{in3}=550 K. The conditions of the streams and inside the control volume do not change with time. Determine $mdot_{out}$ and temperature and quality of the steam at the exit.
ANSWER: 0.4400 kg/s, 425.0 K, 0.8367.

9. An ejector uses steam at 3 Mpa and 673 K at a mass flow rate of 3 kg/s, and water of 70 kPa and 313 K at a mass flow rate of 1 kg/s. The total mixture comes out at 110 kPa. Assume no heat transfer and steady flow steady state. Find the temperature and quality of the exiting stream.
ANSWER: 375.5 K, 0.9044.
10. An ejector uses steam at 120 psia and 700EF at a mass flow rate of 2 lbm/s, and water of 30 psia and 100EF at a mass flow rate of 2.7 lbm/s. The total mixture comes out at 60 psia. Assume no heat transfer and steady flow steady state. Find the temperature and quality of the exiting stream.
ANSWER: 292.7EF, 0.3967.

4.4.7. Splitter

A *splitter* is a device to split one stream fluid into two or more streams of fluids. The splitter does not have to be a distinct chamber. An ordinary Y-elbow in a shower, for example, serves as a splitter. Splitters are usually well insulated (Q=0) and do not involve shaft work. Also, the kinetic and potential energies of the working fluid streams are usually negligible. A deaerator removes gas dissolved in a gas-liquid mixture and is usually considered to be an isobaric process. A dehumidifier removes water from a water-air mixture and is usually considered to be an isobaric process.

Generally, changes between inlet and outlet kinetic and potential energies are very small in comparison with changes in enthalpy. Application of the mass balance equation and the first law of thermodynamics to a steady flow steady state splitter give the total mass rate flow in at the inlets equal to the total mass rate flow out at the exit of the splitter, and the total enthalpy rate flow in at the inlet equal to the total enthalpy rate flow out at the exits of the splitter mixing chamber.

$$3(mdot)_{in} = 3(mdot)_{out} \tag{4.4.7.1}$$

and

$$3[(mdot)_{in}\,(h_{in})] = 3[(mdot)_{out}\,(h_{out})] \tag{4.4.7.2}$$

Example 4.4.7.1.

A geothermal saturated steam with a mass rate flow of 3 kg/s at a pressure of 1200 kPa and 90 percent quality is separated into saturated liquid and saturated vapor. Determine the mass flow rates of the saturated liquid and saturated vapor.

To solve this problem by CyclePad, we take the following steps:

1. Build

(A) Take a source, a, splitter and two sinks from the open-system inventory shop and connect them.

(B) Switch to analysis mode.

2. Analysis

(A) Assume the splitter is isobaric.

(B) Input the given information: (a) working fluids are water, (b) mass flow rate, pressure and quality of the water at the inlet are 3 kg/s, 1200 kPa and 0.9, (c) quality of the water at one outlet is 1, and (d) quality of the water at the other outlet is 0.

3. Display results

The answers are mdot,liquid=0.3 kg/s and mdot,vapor=2.7 kg/s.

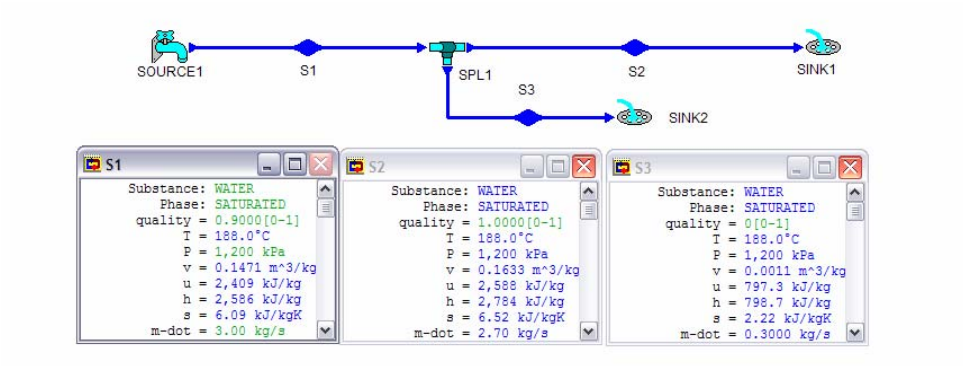

Figure E4.4.7.1. Splitter

Homework 4.4.7. Splitter

1. A 1.3 kg/s stream of geothermal hot water at 350 kPa flows into a separator to make saturated water and saturated steam at 350 kPa. If we want to produce a flow rate of 1 kg/s of 350 kPa saturated steam, determine the quality of the geothermal hot water.
   ANSWER: 0.7692.
2. A 1.7 kg/s stream of saturated liquid and vapor mixture R134a at 6EC flows into an isobaric separator to make saturated liquid and saturated vapor. If we want to produce a flow rate of 1 kg/s of saturated vapor, determine the quality of the two-phase mixture.
   ANSWER: 0.5882.
3. A 4 kg/s stream of saturated liquid and vapor mixture methane at 200 kPa flows into an isobaric separator to make two separate streams of mixture methane. If we want to produce a flow rate of 1 kg/s of 80% quality of saturated mixture in one stream and another stream of 50% quality of saturated mixture, determine the inlet quality of the two-phase mixture.
   ANSWER: 0.5750.
4. A 3 kg/s stream of steam at 200 kPa flows into an isobaric separator to make two separate streams of mixture steam. If we want to produce a flow rate of 1 kg/s of 80% quality of saturated mixture in one stream and another stream of 50% quality of saturated mixture, determine the inlet quality of the two-phase mixture.
   ANSWER: 0.6.

5. A 2.5 kg/s stream of steam at 200 kPa flows into an isobaric separator to make two separate streams of mixture steam. If we want to produce a flow rate of 1 kg/s of 90% quality of saturated mixture in one stream and another stream of 20% quality of saturated mixture, determine the inlet quality of the two-phase mixture.
   ANSWER: 0.48.

4.4.8. Heat Exchanger

A *heat exchanger* uses multi stream fluids (usually two streams) flowing through a device where heat is transferred from one stream fluid at a higher temperature to the other stream fluid at a lower temperature. The fluids are heated or cooled and may or may not change phases. The heat exchanging process tends to occur at constant pressure, since the fluids flowing through the device usually undergo only small pressure drops due to fluid friction at the walls. There are no means for doing any shaft work, and changes in kinetic and potential energies are commonly negligible. Energies are exchanged from one stream fluid to another stream fluid inside the heat exchanger. There is no heat interaction with the surroundings. An economizer is a low-temperature and low-pressure heat exchanger. A regenerator is a heat exchanger used to recover energy.

Generally, changes between inlet and outlet kinetic and potential energies are very small in comparison with changes in enthalpy. Application of the mass balance equation and the First law of thermodynamics to a steady flow steady state heat exchanger, the total mass rate flow in at the inlets is equal to the total mass rate flow out at the exit of the mixing chamber, and the total enthalpy rate flow in at the inlets is equal to the total enthalpy rate flow out at the exit of the mixing chamber.

$$3(\text{mdot})_{in} = 3(\text{mdot})_{out} \tag{4.4.8.1}$$

and

$$3[(\text{mdot})_{in}\,(h_{in})] = 3[(\text{mdot})_{out}\,(h_{out})] \tag{4.4.8.2}$$

Heat exchangers in various applications are called boiler, condenser, open feed water heater, etc.

Example 4.4.8.1.

Steam enters a condenser (Heat exchanger) at a pressure of 1 psia and 90 percent quality. It leaves the condenser as saturated liquid at 1 psia. Cooling lake water available at 14.7 psia and 55EF is used to remove heat from the steam. For a flow rate of 5 lbm/s of steam, determine the flow rate of cooling water, if (a) the cooling water leaves the condenser at 60EF, and (b) the cooling water leaves the condenser at 70EF.

To solve this problem by CyclePad, we take the following steps:

1. Build

(A) Take two sources, a heat exchanger, and two sinks from the open-system inventory shop and connect them. Please note that red indicates hot and blue indicates cold, respectively.
(B) Switch to analysis mode.

2. Analysis
   (A) Assume the heat exchanger are isobaric on both hot and cold sides.
   (B) Input the given information: (a) working fluid are water for both streams, (b) mass flow rate, pressure and quality of the steam at the heat exchanger inlet are 5 lbm/s, 1 psia and 0.9, (c) pressure and temperature of the lake water at the heat exchanger inlet are 14.7 psia and 55EF, and (d) quality of the steam at the heat exchanger outlet is 0, and (e) temperature of the lake water at the heat exchanger outlet is 60EF (or 70EF).
3. Display results

The answer is (a) mdot=932.4 lbm/s, and (b) mdot=310.9 lbm/s.

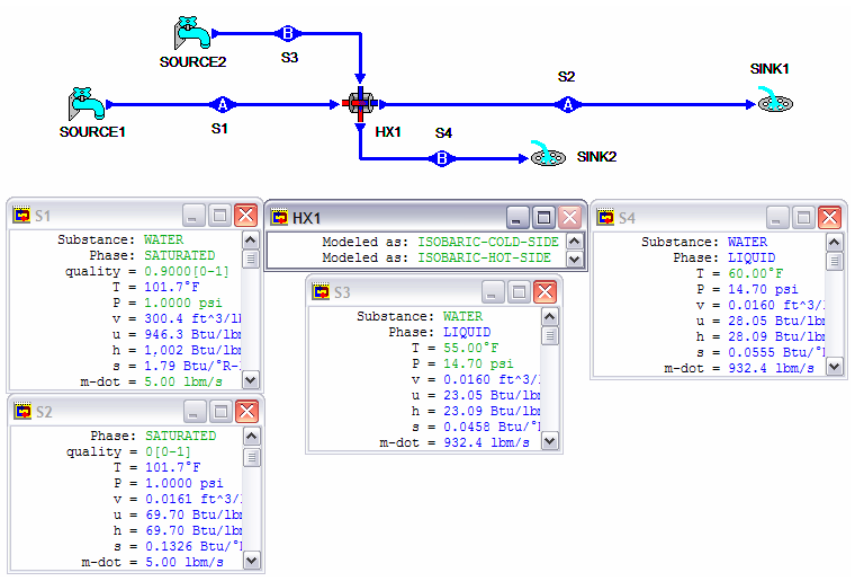

Figure E4.4.8.1. Heat exchanger

Example 4.4.8.2.

Air with a mass rate flow of 0.1 kg/s enters a water-cooled condenser at 1000 kpa, 260EC and leaves at 1000 kpa and 85EC. Cooling lake water available at 100 kPa and 15EC is used to remove heat from the air. The lake water leaves at 100 kPa and 30EC. Determine the mass rate flow of the lake water required.

To solve this problem by CyclePad, we take the following steps:

1. Build

(A) Take two sources, a heat exchanger, and two sinks from the open-system inventory shop and connect them.
(B) Switch to analysis mode.

2. Analysis
   (A) Assume the heat exchanger are isobaric on both hot and cold sides.
   (B) Input the given information: (a) working fluid are air for one stream and water for the other stream, (b) mass flow rate, pressure and quality of the air at the heat exchanger inlet are 0.1 kg/s, 1 MPa and 260EC, (c) pressure and temperature of the lake water at the heat exchanger inlet are 100 kPa and 15EC , and (d) pressure and temperature of the lake water at the heat exchanger exit are 100 kPa and 30EC.
3. Display results

The answer is mdot=0.2798 kg/s.

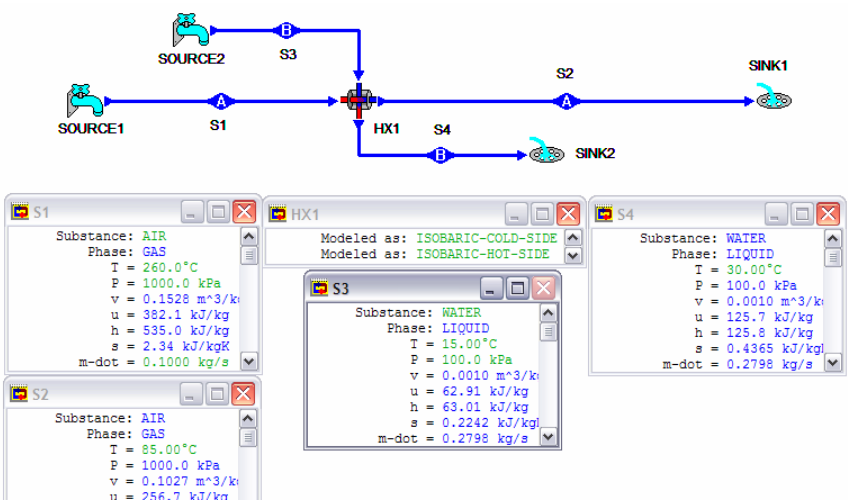

Figure E4.4.8.2. Heat exchanger

Example 4.4.8.3.

Freon R-134a with a mass rate flow of 0.012 kg/s enters a water-cooled condenser at 1 Mpa, 60EC and leaves as a liquid at 1 Mpa and 35EC. Cooling lake water available at 100 kPa and 15EC is used to remove heat from the freon. The lake water leaves at 100 kPa and 20EC. Determine the mass rate flow of the lake water required.

To solve this problem by CyclePad, we take the following steps:

1. Build
   (A) Take two sources, a heat exchanger, and two sinks from the open-system inventory shop and connect them.
   (B) Switch to analysis mode.
2. Analysis
   (A) Assume the heat exchanger is isobaric on both hot and cold sides.

(B) Input the given information: (a) working fluid are R-134a for one stream and water for the other stream, (b) mass flow rate, pressure and quality of the R-134a at the heat exchanger inlet are 0.014 kg/s, 1 MPa and 60EC, (c) pressure and temperature of the lake water at the heat exchanger inlet are 100 kPa and 15EC , and (d) pressure and temperature of the lake water at the heat exchanger exit are 100 kPa and 20EC.

3. Display results

The answer is mdot=0.1111 kg/s.

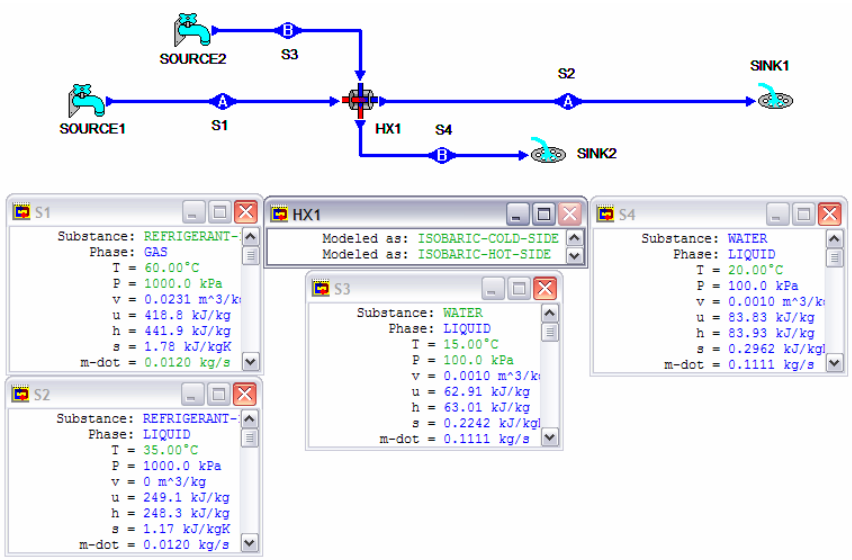

Figure E4.4.8.3. Heat exchanger

Example 4.4.8.4.

Freon R-134a with a mass rate flow of 0.014 kg/s enters a water-cooled condenser at 1 Mpa, 60EC and leaves as a liquid at 1 Mpa and 35EC. Air available at 100 kPa and 15EC is used to remove heat from the freon. The air leaves at 100 kPa and 30EC. Determine the mass rate flow and volumetric rate flow of the air required.

To solve this problem by CyclePad, we take the following steps:

1. Build
   (A) Take two sources, a heat exchanger, and two sinks from the open-system inventory shop and connect them.
   (B) Switch to analysis mode.
2. Analysis
   (A) Assume the heat exchanger is isobaric on both hot and cold sides.
   (B) Input the given information: (a) working fluid are R-134a for one stream and water for the other stream, (b) mass flow rate, pressure and quality of the R-134a at the heat exchanger inlet are 0.014 kg/s, 1 MPa and 60EC, (c) pressure and

temperature of the air at the heat exchanger inlet are 100 kPa and 15EC, and (d) pressure and temperature of the lake water at the heat exchanger exit are 100 kPa and 30EC.

3. Display results

The answer is mdot=0.1801 kg/s and Vdot=0.1565 m^3/s.

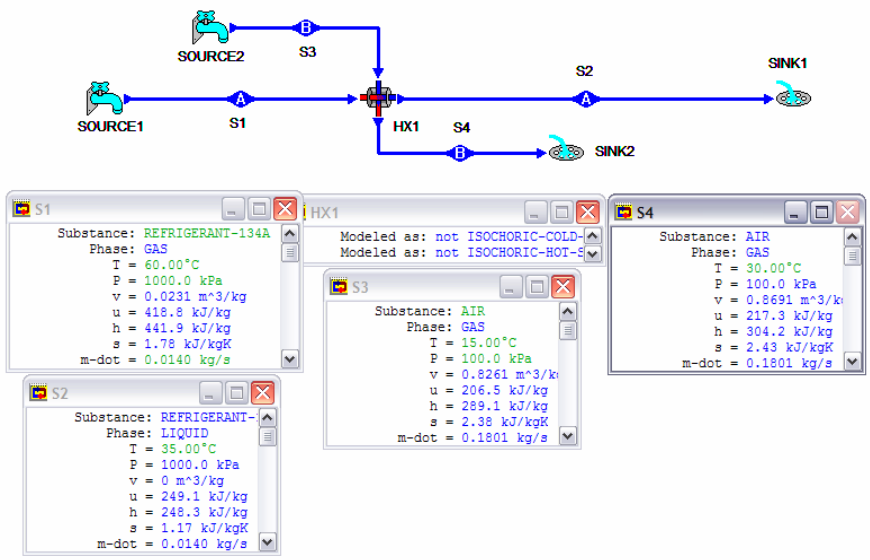

Figure E4.4.8.4. Heat exchanger

Example 4.4.8.5.

We want to cool 50 lbm/s of air from 14.7 psia and 540ER to 14.7 psia and 440ER in a steady-state steady-flow heat exchanger. If 40 lbm/s nitrogen gas at 15 psia and 300ER is available, determine the temperature of the nitrogen at the outlet.

To solve this problem by CyclePad, we take the following steps:

1. Build
   (A) Take two sources, a heat exchanger, and two sinks from the open-system inventory shop and connect them.
   (B) Switch to analysis mode.
2. Analysis
   (A) Assume the heat exchanger is isobaric on both hot and cold sides.
   (B) Input the given information: (a) working fluids are air in one stream and nitrogen in another stream, (b) mass flow rate, pressure and temperature of the air at the heat exchanger inlet are 50 lbm/s, 14.7 psia and 540ER 10 kPa, (c) mass flow rate, pressure and temperature of the nitrogen at the heat exchanger inlet are 40 lbm/s, 15 psia and 300ER, and (d) temperature of the air at the heat exchanger outlet is 340ER. 4000 kPa,
3. Display results

The answers is T=420.1 ER.

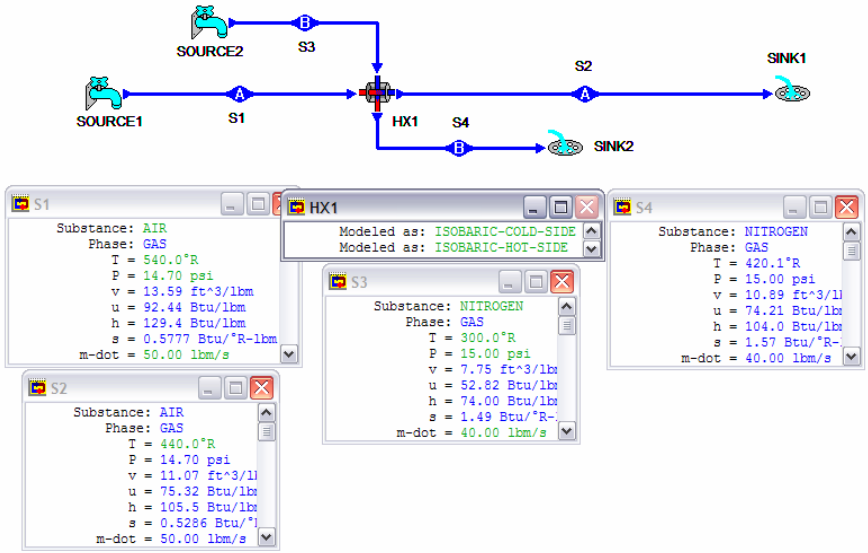

Figure E4.4.8.5. Heat exchanger

Homework 4.4.8. Heat Exchanger

1. Steam enters a constant pressure heat exchanger at 200 kPa and 200EC at a rate of 8 kg/s, and it leaves at 180 kPa and 100EC. Air enters at 100 kPa and 25EC and leaves at 100 kPa and 47EC. Determine the mass rate flow of air.
   ANSWER: 888 kg/s.
2. A heat exchanger is designed to use exhaust steam from a turbine to heat air in a manufacturing plant. Steam enters the well-insulated heat exchanger with a mass flow rate of 1.2 kg/s, 200 kPa and 200EC. The steam leaves the heat exchanger at 200 kPa and as saturated vapor. The air enters the heat exchanger at 20EC, 3 kg/s and 100 kPa and leaves at 100 kPa. Find the temperature of the air as it leaves the heat exchanger.
   ANSWER: 85.18^{o}C.
3. Water is used to cool a refrigerant in a condenser of a large refrigeration system. Cooling water flows through the condenser at a rate of 2 kg/s. The cooling water enters the condenser at 10°C and exits at 20 ^{o}C. Refrigerant R134a flows through the condenser at a rate of 1 kg/s. The R134a enters the condenser at 40 ^{o}C as a two-phase saturated mixture and exits at 40 ^{o}C as a saturated liquid. Determine the rate at which heat is removed by the cooling water in kJ/s.
   ANSWER: 83.7 kW.
4. Hot gas enters the heat recovery steam generator of a cogeneration system at 500EC and 100 kPa and leaves at 150EC and 100 kPa. Water enters steadily at 100EC and

1,000 kPa and leaves as dry saturated steam at 1,000 kPa. For a mass flow rate of hot gas of 25 kg/s, determine the flow rate of water in kg/s. Find the rate of the gas flow leaving the heat exchanger.
ANSWER: 3.72 kg/s, 30.33 m^3/s.

4.4.9. Throttling Valve

A throttle or a valve is called a *throttling valve* which is an inexpensive control device which, by an obstruction in its through-flow reduces the pressure of the working fluid. It is used to regulate the pressure of a fluid. It is also used to measure mass flow rates and quality of a mixture. It can also be utilized to reduce the power or speed of a heat engine. Throttling processes occur in obstructed flow passages such as valves, flow meters, capillary tubes, and other devices that reduce the pressure of the working fluid without any shaft work or heat interactions. There is neither work nor heat transfer interaction between the valve and its surroundings. A flash evaporator generates vapor by expansion (throttling) of a pure substance.

Application of the First law of thermodynamics (neglecting kinetic and potential energy changes) to a steady flow steady state throttling valve gives

$$W=0,\ Q=0,\ \text{and}\ h_e=h_i \tag{4.4.9.1}$$

Therefore, the process experienced by a fluid when it goes through a throttle valve, a porous plug, or a plate with a very small hole in it is called the *throttling process.* A throttling process is a constant enthalpy process. The inlet enthalpy of the working fluid of a throttling valve is equal to the exit enthalpy of the working fluid. Reducing the pressure of the working fluid in throttling manner involves considerable irreversibility. As a result, the throttling process is highly irreversible. The throttling valve is primarily used as a means to control a turbine, to reduce the pressure between the condenser and evaporator of a refrigerator or heat pump, or as a flow measurement device.

Example 4.4.9.1.

Refrigerant R-12 enters a throttling valve as a saturated liquid at 50EC. It leaves at -5EC as a saturated mixture. The process is steady-state flow. Determine the quality of the refrigerant at the outlet of the throttling valve, the pressure drop and entropy change of the refrigerant R-12.

To solve this problem by CyclePad, we take the following steps:

1. Build
   (A) Take a source, a throttling valve, and a sink from the open-system inventory shop and connect them.
   (B) Switch to analysis mode.
2. Analysis
   (A) Input the given information: (a) working fluid is R-12, (b) the inlet temperature and quality of the throttling valve are 100EF and 0, (c) the outlet temperature of the throttling valve is -5EC, and the phase is saturated.

3. Display results

The answers are x=0.3476,)p=-959.3 kPa and)s=0.0209 kj/[kg(K)].

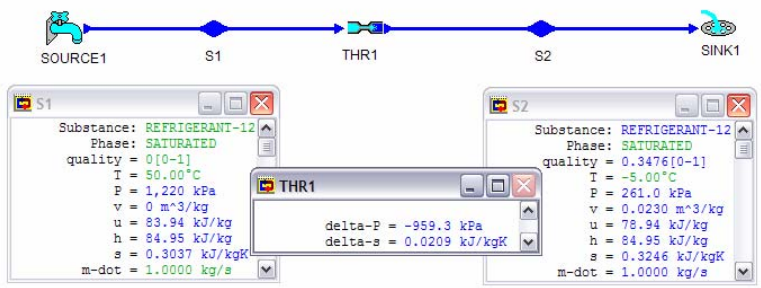

Figure E4.4.9.1. Throttling valve

Example 4.4.9.2.

0.1 lbm/s of air flow rate enters a throttling valve at 100 psia and 100EF. It leaves at 90 psia. The process is steady-state flow. Determine the pressure drop and entropy change of the air, and the temperature of the air at the outlet of the throttling valve.

To solve this problem by CyclePad, we take the following steps:

1. Build
   (A) Take a source, a throttling valve, and a sink from the open-system inventory shop and connect them.
   (B) Switch to analysis mode.
2. Analysis
   (A) Input the given information: (a) working fluid is air, (b) the inlet temperature and pressure of the throttling valve are 100EF and 100 psia, (c) the outlet pressure of the throttling valve is 90 psia.
3. Display results

The answer answers are)p=-10 psia, and)s=0.0072 Btu/[lbm(R)], and T=100EF.

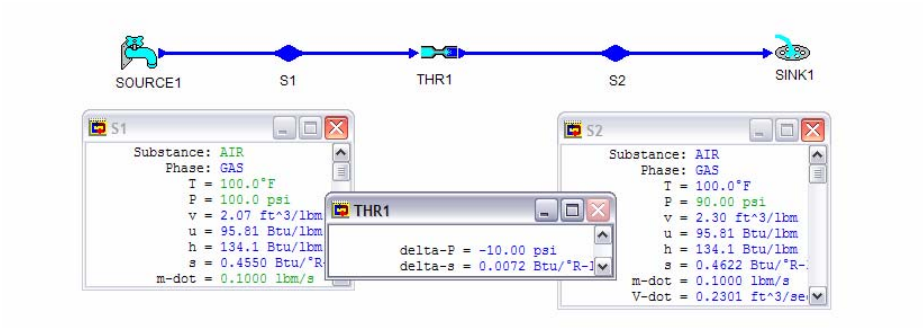

Figure E4.4.9.2. Throttling valve

Comment: Since h of ideal gases is a function of temperature only, $h_e=h_i$ gives $T_e=T_i$=100EF.

Example 4.4.9.3.

A throttling steam calorimeter (valve) is an instrument used for the determination of the quality of wet steam flowing in a steam main. It utilizes the fact that when wet steam is throttled sufficiently, superheated steam will form. If wet steam at 200 psia is throttled in a throttling steam calorimeter to 15 psia and 300 EF, Determine the pressure drop and entropy change of the water, and the quality of the wet steam.

To solve this problem by CyclePad, we take the following steps:

1. Build
   (A) Take a source, a throttling valve, and a sink from the open-system inventory shop and connect them.
   (B) Switch to analysis mode.
2. Analysis
   (A) Input the given information: (a) working fluid is water, (b) the inlet phase is saturated, and pressure of the throttling valve is 200 psia, (c) the outlet pressure and temperature of the throttling valve are 15 psia and 300 EF.
3. Display results

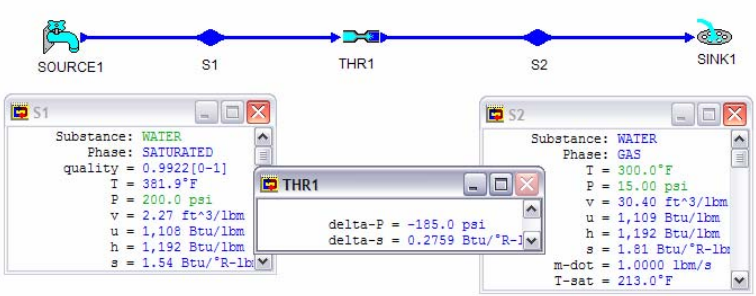

Figure E4.4.9.3. Throttling valve

The answers are)p=-185 psia, and)s=0.2759 Btu/[lbm(R)], and x=0.9922.

Homework 4.4.9. Throttling Valve

1. What is the difference between a throttling process and a turbine process?
2. Would you expect the pressure of steam to drop as it undergoes a steady flow throttling process?
3. Would you expect the temperature of steam to drop as it undergoes a steady flow throttling process?
4. Would you expect the pressure of air to drop as it undergoes a steady flow throttling process?
5. Would you expect the temperature of air to drop as it undergoes a steady flow throttling process?
6. In a throttling process, is the enthalpy change equal to zero?
7. In a steam throttling process, is the temperature change equal to zero?
8. Both turbines and throttling valves are expansion devices. Why are throttling valves used in refrigeration and heat pumps rather than turbines?
9. Does the throttling valve reduce the mass flow rate of a fluid?
10. A throttling steam calorimeter is an instrument used for the determination of the quality of wet steam flowing in a steam main. It utilizes the fact that when wet steam is throttled sufficiently, superheated steam will form. If the wet steam at 200 psia is throttled in a calorimeter to 15 psia and 300EF, determine the quality of the steam.
    ANSWER: 0.9922.
11. Ammonia enters an expansion valve at 1.5 MPa and 32 C and exits at 268 kPa. Find the quality and temperature of the ammonia leaving the valve.
    ANSWER: 0.1568, -11.98EC.
12. A steady flow of refrigerant-134a enters a throttling valve at 100EF and as saturated liquid, and leaves at 50 EF as a two-phase saturated vapor and liquid mixture. Determine the inlet and exit pressure and the exit quality.
    ANSWER: 139.2 psia, 60.31 psia, 0.2080.
13. A throttling calorimeter is connected to a saturated steam line. The line pressure is 400 psia, the calorimeter pressure is 14.7 psia and the temperature is 260EF. Determine the enthalpy and quality of the steam.
    ANSWER: 1173 Btu/lbm, 0.9595.
14. A throttling calorimeter is used to determine the quality of steam originating in a system maintained at 600 psia. What is the quality of the steam if the calorimeter temperature and pressure are 225 EF and 14.7 psia?
    ANSWER: 0.9357.
15. Steam at 80 psia and 860 R at the inlet of a valve is expanded at constant enthalpy process to 20 psia. What is the temperature of the steam at the exit? If steam under these conditions were an ideal gas, what would be the temperature of the gas at the exit?
16. Helium gas at 300 K and 300 kPa passes through a partly opened valve in an insulted pipe. The pressure on the downstream side of the valve is 100 kPa. What is the

temperature on the downstream side? What is the change in entropy of the gas through the valve?

4.4.10. Reactor

A reactor allows chemical reaction between two or more substances to create heat. The heating process is usually considered to be isobaric.

A *nuclear reactor* is a heater in which a simple single stream fluid flows through a device where nuclear heat is transferred to the fluid. The fluid is heated and may or may not change phases. The heating process tends to occur at constant pressure, since a fluid flowing through the device usually undergoes only a small pressure drop due to fluid friction at the walls. There are no means for doing any shaft or electric work, and changes in kinetic and potential energies are commonly negligibly small.

Application of the First law of thermodynamics to a steady flow steady state reactor gives

$$W=0 \text{ and } Q = m(h_e-h_i) \tag{4.4.10.1}$$

Example 4.4.10.1.

1000 kW of nuclear heat is added to helium at a constant volume process in a nuclear reactor. The inlet temperature and pressure of the helium are 50EC and 300 kPa and the outlet temperature of the helium is 2000EC. Determine the mass flow rate, volumetric flow rate, and pressure of the helium at the exit section.

To solve this problem by CyclePad, we take the following steps:

1. Build
   (A) Take a source, a reactor, and a sink from the open-system inventory shop and connect them.
   (B) Switch to analysis mode.
2. Analysis
   (A) Input the given information: (a) working fluid is helium, (b) the inlet temperature and pressure of the helium are 50EC and 300 kPa, (c) the outlet temperature of the helium is 2000EC.
   (B) The model process of the reactor is constant volume and heat rate added is 1000 kW.
3. Display results

The answers are mdot=0.0991 kg/s, Vdot=0.2216 m^3/s, p=2110 kPa and)s=6.05 kJ/[kg(K)].

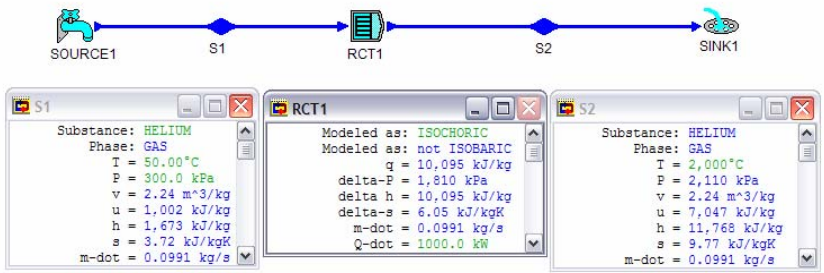

Figure E4.4.10.1. Reactor

4.5. OTHER DEVICES (UNABLE TOUSE CYCLEPAD)

4.5.1. Nozzle

A *nozzle* is a small device used to create a high kinetic energy or a high velocity fluid stream at the expense of its pressure. The substance may be a liquid as with a garden hose nozzle, or a gas as with an exit nozzle on a rocket. There is no means to do mechanical shaft work. A nozzle is usually modeled as adiabatic. This assumption is reasonable because the heat transfer surface area of the nozzle is very small, and the length of time required for the working fluid to pass through the nozzle is very short. Therefore the ideal process is considered to be reversible and adiabatic, or isentropic. A nozzle is also used to measure flow rate.

Application of the First law of thermodynamics to a steady flow steady state nozzle gives

$$W=0,\ Q=0,\ \text{and}\ h_i + (\mathbf{V}_i)^2/2 = h_e + (\mathbf{V}_e)^2/2 \qquad (4.5.1.1)$$

Usually the kinetic energy of the fluid at the inlet of the nozzle is much smaller than the kinetic energy of the fluid at the exit, and would be neglected if its value is not known. Equation (4.5.1) is then reduced to

$$h_i = h_e + (\mathbf{V}_e)^2/2 \qquad (4.5.1.2)$$

Comparison between the actual and the ideal nozzle performance is given by the isentropic efficiency, 0. Since an ideal nozzle raises higher theoretical kinetic energy than the actual kinetic energy by an actual adiabatic nozzle at exit, the nozzle efficiency, 0, is defined as

$$0=[(\mathbf{V}_{actual})^2/2]/[(\mathbf{V}_{isentropic})^2/2] \qquad (4.5.1.3)$$

Example 4.5.1.1.

Air enters a nozzle at 100 psia and 200EF, and leaves at 15 psia and -40EF. The inlet velocity is 100 ft/s. Determine the air exit velocity.

Solution: Applying Eq. (4.5.1) gives $\mathbf{V}_e = [2(h_i-h_e) + (\mathbf{V}_e)^2]^{1/2} = [2c_p(T_i-T_e) + (\mathbf{V}_e)^2]^{1/2} = [2(0.24)(200+40)25000+100^2]^{1/2} = 1702$ ft/s.

Notice that the conversion factor of 1 Btu/lbm=25000 $(ft/s)^2$.

4.5.2. Diffuser

A *diffuser* is a small device used to decelerate a high velocity fluid stream and raise the pressure of the fluid. There are no means to do work. A diffuser is usually modeled as adiabatic. This assumption is reasonable because the heat transfer surface area of the diffuser is very small, and the length of time required for the working fluid to pass through the diffuser is very short. Therefore the ideal process is considered to be reversible and adiabatic, or isentropic.

Application of the First law of thermodynamics to a steady flow steady state diffuser gives

$$W=0,\ Q=0,\ \text{and}\ h_i + (\mathbf{V}_i)^2/2 = h_e + (\mathbf{V}_e)^2/2 \qquad (4.5.2.1)$$

Usually the kinetic energy of the fluid at the exit of the diffuser is much smaller than the kinetic energy of the fluid at the inlet, and would be neglected if its value is not known. Eq. (4.5.2.1) is then reduced to

$$h_i + (\mathbf{V}_i)^2/2 = h_e \qquad (4.5.2.2)$$

Example 4.5.2.1

Air enters an isentropic diffuser at 250 m/s, 120 kPa and 40EC, and leaves at 90 m/s. Determine the air exit temperature.

Solution: Applying Eq. (4.5.4) gives $h_e - h_i = c_p(T_e-T_i) = (\mathbf{V}_i)^2/2 - (\mathbf{V}_e)^2/2$

Thus $T_e=T_i+[(V_i)^2/2 - (\mathbf{V}_e)^2/2]/c_p=313+\{[250^2 -90^2]/2000\}/0.24=340.2$ K

Notice that the conversion factor of 1 kJ/kg=1000 $(m/s)^2$.

Homework 4.5. Nozzle and Diffuser

1. What is the function of a nozzle?
2. What is the function of a diffuser?

4.6. SYSTEMS CONSISTING OF MORE THAN ONE OPEN-SYSTEM DEVICE

We have studied several problems involving only one steady flow device in each case. In this section, we will study a few problems in which two or more devices are combined to perform an application task.

Example 4.6.1.

Water is heated in an isobaric boiler from 6 Mpa and 90EC to 500EC (process 1-2). It is then expanded in an isentropic turbine to 50 kPa (process 2-3). The required turbine shaft power is 100,000 kW. Determine the quality and temperature of steam at the exit of the turbine, entropy change from state 1 to state 3, enthalpy change from state 1 to state 3, heat added in the boiler, work produced by the turbine, and mass rate of water.

To solve this problem by CyclePad, we take the following steps:

1. Build
   (A) Take a source, a heater, a turbine, and a sink from the open-system inventory shop and connect them.
   (B) Switch to analysis mode.
2. Analysis
   (A) Assume the heater is isobaric, turbine is isentropic.
   (B) Input the given information: (a) working fluid is water, (b) inlet pressure and temperature to the boiler are 6 Mpa and 90EC, (b) outlet temperature of the boiler is 500EC, (c) outlet pressure of the turbine is 50 kPa, and (d) the turbine turbine shaft power is 100,000 kW.
3. Display results

The answers are x=0.8904, T=81.34EC,)s=6.88-1.19=5.69 kJ/[kg(K)], Qdot=295,363 kW.

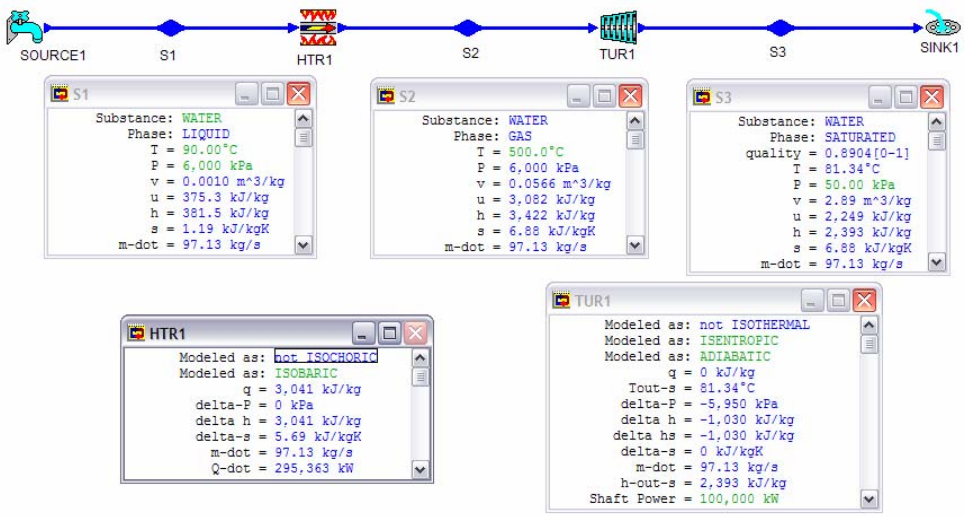

Figure E4.6.1. Multi-process

Example 4.6.2.

Water is expanded in an adiabatic turbine from 6 Mpa and 500EC to 50 kPa to a quality of 0.93 (process 1-2). Water is then condensed in an isobaric condenser to saturated liquid (process 2-3). The water mass flow rate is 32 kg/s. Determine the temperature of steam at the exit of the turbine, entropy change from state 1 to state 3, enthalpy change from state 1 to state 3, rate of heat removed from the condenser, power produced by the turbine, and efficiency of the turbine.

To solve this problem by CyclePad, we take the following steps:

1. Build
   (A) Take a source, a cooler, a turbine, and a sink from the open-system inventory shop and connect them.
   (B) Switch to analysis mode.
2. Analysis
   (A) Assume the cooler is isobaric, turbine is isentropic.
   (B) Input the given information: (a) working fluid is water, (b) inlet pressure and temperature to the condenser are 6 Mpa and 500EC, (b) outlet quality of the condenser is 0, and (c) mass flow rate is 32 kg/s.
3. Display results

The answers are T=105EC,)s=1.36-6.88=-5.55 kJ/[kg(K)],)h=440.1-3422=-3081.5 kJ/kg, Qdot=-66,765 kW, Wdot=28,665 kW, and 0=100%.

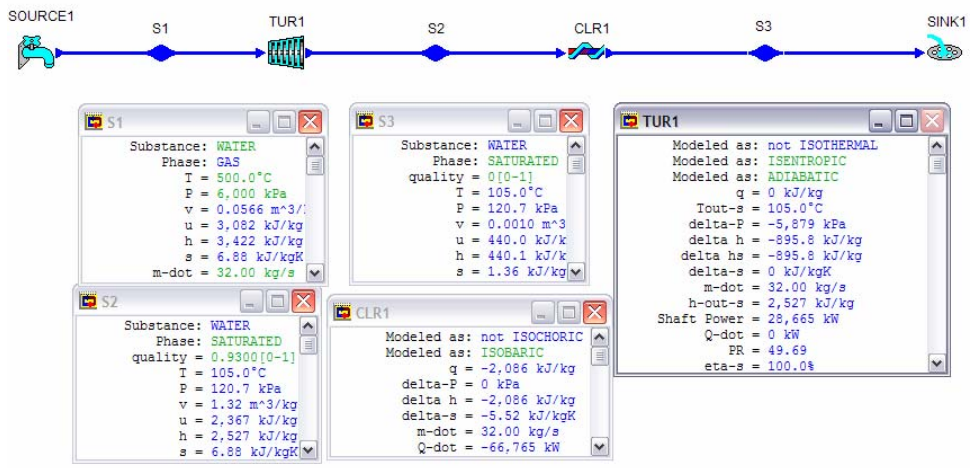

Figure E4.6.2. Device combination

Example 4.6.3.

Refrigerant R-134a is compressed in an adiabatic compressor from 0.14 Mpa and -10EC to 0.8 MPa and 50EC (process 1-2). R-134a is then condensed in an isobaric condenser to saturated liquid (process 2-3). The R-134a mass flow rate is 0.02 kg/s. Determine the temperature of R-134a at the exit of the condenser, entropy change from state 1 to state 3, enthalpy change from state 1 to state 3, rate of heat removed from the condenser, power required by the compressor, and efficiency of the compressor.

To solve this problem by CyclePad, we take the following steps:

1. Build
   A. Take a source, a heater, a compressor, and a sink from the open-system inventory shop and connect them.
   B. Switch to analysis mode.
2. Analysis
   A. Assume the heater is isobaric, compressor is adiabatic.
   B. Input the given information: (a) working fluid is R-134a, (b) inlet pressure and temperature to the condenser are 6 Mpa and 90EC, (b) outlet temperature of the condenser is 500EC, (c) outlet pressure of the compressor is 50 kPa, and (d) the compressor shaft power is 100,000 kW.
3. Display results

The answers are T=31.24EC,)s=1.15-1.77=-0.62 kJ/[kg(K)],)h=243.6-394.1=-150.5 kJ/kg, Qdot=-3.83 kW, Wdot=-0.82 kW, and 0=93.23%.

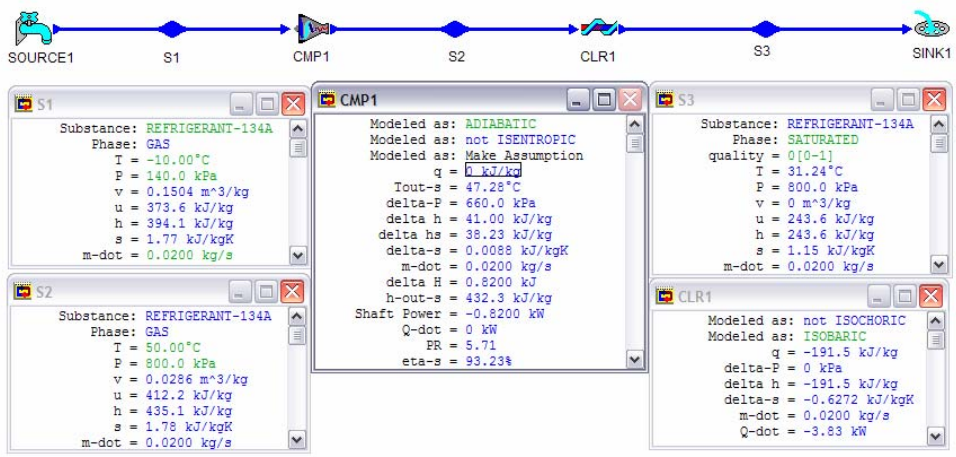

Figure E4.6.3. Device combination

Homework 4.6. Combination

1. 2.3 kg/s of air flows through a two-stage turbine with a reheater. Air flows into the high-pressure adiabatic turbine at 1400 K and 1200 kPa and leaves at 1100 K and 400 kPa. It enters the isobaric reheater and leaves at 1400 K. Air then enters the low-pressure adiabatic turbine and leaves at 800 K and 120 kPa. Determine (A) the power produced by the high-pressure turbine, (B) the heat transfer added by the reheater, and (C) the power produced by the low-pressure turbine.
   ANSWER: (A) 692.4 kW, (B) 692.4 kW, (C) 1385 kW.
2. 3.4 kg/s of steam flows through a two-stage turbine with a reheater. Steam flows into the high-pressure isentropic turbine at 800 K and 1200 kPa and leaves at 600 kPa. It enters the isobaric reheater and leaves at 800 K. Steam then enters the low-pressure isentropic turbine and leaves at 30 kPa. Determine (A) the power produced by the high-pressure turbine, (B) the heat transfer added by the reheater, and (C) the power produced by the low-pressure turbine.
   ANSWER: (A) 754.3 kW, (B) 774.4 kW, (C) 2905 kW.
3. 0.12 kg/s of refrigerant R12 enters an isentropic compressor at -25EC as saturated vapor and leaves at 1000 kPa. The refrigerant then enters an isobaric cooler and leaves as a saturated liquid. Determine the power required by the compressor and heat transfer removed from the cooler.
   ANSWER: -4.46 kW, -16.48 kW.
4. 0.012 kg/s of refrigerant R22 enters an adiabatic compressor at -25EC as saturated vapor and leaves at 1000 kPa and 52EC. The refrigerant then enters an isobaric cooler and leaves as a saturated liquid. Determine the power required by the compressor and heat transfer removed from the cooler.
   ANSWER: -0.4885 kW, -2.49 kW.

5. Air at 1 kg/s mass flow rate is to be compressed from 101 kPa and 293 K to a final state of 1000 kPa and 450 K. Find:
   A. The power if the compression is done first isentropically to the final pressure and then cooled to the final state.
   B. The power if the process is done polytropically. What is the polytropic index, n?
   ANSWER: (A) -272.0 kW, (B) -240.5 kW, n=1.23.
6. A chemical plant has saturated steam available at 400 psia. But, due to a process change, there is little use for the steam at this pressure. In addition, the plant also has exhaust saturated steam available at 40 psia. It has been suggested that the 40 psia steam be compressed to 150 psia. The two streams at 150 psia could then be mixed to form a 100 lbm/s stream of steam at 150 psia and 80% quality for a new application.. Calculate the mass flow rate of the two streams and the work required to compress the 40 psia stream.

4.7. SUMMARY

An open system (control volume) is a fixed volume system, which is different from a fixed mass system (control mass). The mass balance of the open system can be expressed as)m= m_i -m_e. The energy balance of the open system, called the First law of thermodynamics for open system, can be expressed as)E=Q-W +E_i -E_e, where energy flow in or out with mass across the boundary surface is E= E_k +E_k+U +pV= E_k +E_k+H. Boundary work for open systems is zero, because the volume of the system is fixed.

Steady flow and steady state is the most important case of engineering applications. The mass , energy and other quantities of the system are constant in the steady state, and the fluid flows through the system steadily. The mass and energy balances in this case can be expressed as: m_i=m_e, and 0=Q-W +E_i -E_e.

Various engineering steady flow and steady state processes and devices analyzed by the mass and energy balances are illustrated using CyclePad.

Chapter 5

SECOND LAW OF THERMODYNAMICS

5.1. INTRODUCTION

Thus far we have analyzed thermodynamic systems according to the First law of thermodynamics and state properties relationships. Water does not flow up a hill, heat does not flow from a low temperature body to a high temperature body. Our experiences suggest that processes have a definite direction. A proposed thermodynamic system that does not violate the First law of thermodynamics does not ensure that the thermodynamic system will actually occur. The First law of thermodynamics does not give any information to the direction of the process. There is a need to place restrictions on the direction of flow of a process. The limited amount of energy that can be transformed from one form to another form and the direction of flow of heat and work have not been discussed. The Second law of thermodynamics addresses these areas.

Homework 5.1. Introduction

1. Give an equivalent statement of First Law of thermodynamics.
2. On what important point is the First Law of thermodynamics entirely silent?
3. Does the First law of thermodynamics give any information to the direction of a process?
4. Why do we need the Second Law of thermodynamics?

5.2. DEFINITIONS

5.2.1. Thermal Reservoirs

A *thermal reservoir* is any object or system which can serve as a heat source or sink for another system. Thermal reservoirs usually have accumulated energy capacities which are very, very large compared with the amounts of heat energy they exchange. Therefore the thermal reservoirs are considered to operate at constant temperatures. Examples of large capacity, constant temperature thermal reservoirs which make convenient heat sources and sinks are: ocean, atmosphere, etc.

5.2.2. Heat Engines

A *heat engine* is a continuous cyclic device which produces positive net work output by adding heat. The energy flow diagram of a heat engine and its thermal reservoirs are shown in Figure 5.2.2.1. Heat (Q_H) is added to the heat engine from a high-temperature thermal reservoir at T_H, output work (W) is done by the heat engine, and heat (Q_L) is removed from the heat engine to a low-temperature thermal reservoir at T_L.

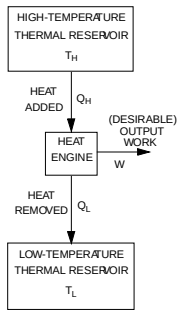

Figure 5.2.2.1. Heat engine

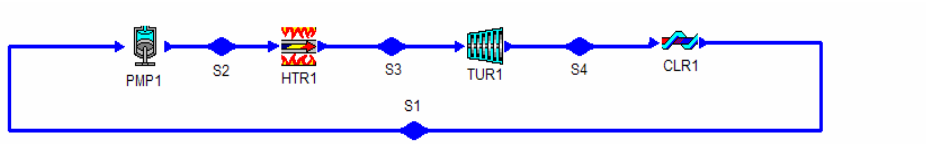

Figure 5.2.2.2. Rankine heat engine

For example, a commercial central power station using a heat engine called a Rankine steam power plant is shown in Figure 5.2.2.2. The Rankine heat engine consists of a pump, a boiler, a turbine and a condenser. Heat (Q_H) is added to the working fluid (water) in the boiler from a high-temperature (T_H) flue gas by burning coal or oil. Output work (W_o) is done by the turbine. Heat (Q_L) is removed from the the working fluid in the condenser to low-temperature (T_L) lake cooling water. Input work (W_i) is added to drive the pump. The net work (W) produced by the Rankine heat engine is $W=W_o-W_i$.

Another example of a heat engine is a nuclear helium gas power plant which is made of a nuclear reactor, a gas turbine, a cooler and a compressor as shown in Figure 5.2.1.3. Heat is added to the nuclear gas power plant in the nuclear reactor, work is produced by the turbine, heat is removed from the cooler, and work input is required to operate the compressor. A part of the work produced by the turbine is used to drive the compressor. The net work output of the nuclear helium gas power plant is the difference between the work produced by the turbine and work required to operate the compressor.

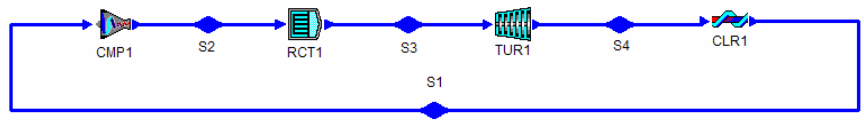

Figure 5.2.2.3. Nuclear helium gas heat engine

The measurement of performance for a heat engine is called the thermal *efficiency,* 0. The thermal efficiency of a heat engine is defined as the ratio of the desirable net output work sought to the heat input of the engine:

$$0=W_{net}/Q_{input} = Wdot_{net}/Qdot_{input} \quad (5.2.2.1)$$

Example 5.2.2.1.

Heat is transferred to a Rankine power plant at a rate of 80 MW. If the net power output of the plant is 30 MW. Determine the thermal efficiency of the power plant.

To solve this problem by CyclePad, we take the following steps:

1. Build
   A. Go to LIBRARY, select Rankine cycle unsolved.
   B. Switch to analysis mode.
2. Analysis
   A. Go to cycle, then cycle properties.
   B. Input the given information: (a) rate of heat added is +80 MW, (b) net power output is +30 MW.
3. Display results: The answer is 0=0.375.

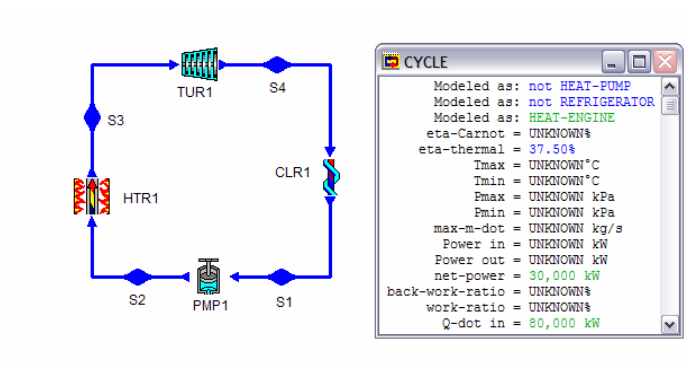

Figure E5.2.2.1. Heat engine efficiency

Example 5.2.2.2.

A Rankine heat engine with a net power output of 85000 hp has a thermal efficiency of 35%. Determine the rate of heat added to the engine.

To solve this problem by CyclePad, we take the following steps:

1. Build
   A. Go to LIBRARY, select Rankine cycle unsolved.
   B. Switch to analysis mode.
2. Analysis
   A. Go to cycle, then cycle properties.
   B. Input the given information: (a) net power output is +85000 hp, (b) cycle efficiency is 35%.
3. Display results: The answer is the rate of heat added=171657 Btu/s.

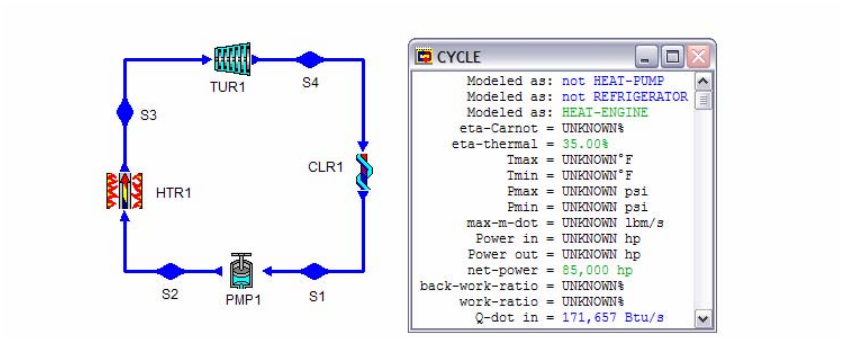

Figure E5.2.2.2. Heat engine

Homework 5.2.2. Heat engines

1. What is a thermal reservoir?
2. Define a heat engine. Define the efficiency of a heat engine.
3. Can heat engine do anything else energy wise other than deliver work?
4. Is a gas turbine a heat engine?
5. Is a steam power plant a heat engine?
6. Is it possible to have a heat engine with efficiency of 100%?
7. Can a heat engine operating with only one thermal reservoir?
8. Is a reversible heat engine more efficient than an irreversible heat engine when operating between the same two thermal reservoirs?
9. Give two expressions to calculate the efficiency of a heat engine.
10. An inventor claims to have developed a heat engine that produces work at 10 kW, while absorbing heat at 9 kW. Evaluate such a claim.
11. An inventor claims to have developed a heat engine that produces work at 10 kW, while absorbing heat at 10 kW. Evaluate such a claim.
12. A closed system cycle has a thermal efficiency of 28%. The heat supplied from the energy source is 1000 Btu/lbm of working substance. Determine (A) heat rejected, and (B) net work of the cycle.
    ANSWER: (A) -720 Btu/lbm, (B) 280 Btu/lbm.

13. A closed system undergoes a cycle in which 600 Btu of heat is transferred to the system from a source at 600 ^{o}F and 350 Btu of heat is rejected to a sink at 250 ^{o}F. From the start to end of the cycle,
    A. What is the change in internal energy of the system (Btu)?
    B. What is the net work of the system (Btu)?
    C. Is this cycle possible? Justify your answer.
    ANSWER: (A) 0, (B) 250 Btu, (C) possible.
14. A simple steam power cycle plant receives 100,000 kJ/min as heat transfer from hot combustion gases at 3000 K and rejects 66,000 kJ/min as heat transfer to the environment at 300 K. Determine (A) the thermal efficiency of the cycle, (B) the net power produced by the cycle, and (C) the maximum possible thermal efficiency of any cycle operating between 3000 K and 300 K.
    ANSWER: (A) 34%, (B) 34000 kJ/min, (C) 90%.

5.2.3. Refrigerators

A *refrigerator* is a continuous cyclic device which removes heat from a low temperature reservoir to a high temperature reservoir at the expense of work input. The energy flow diagram of a refrigerator and its thermal reservoirs are shown in Figure 5.2.3.1. Input work (W) is added to the refrigerator, desirable heat (Q_L) is removed from the low-temperature thermal reservoir at T_L, and heat (Q_H) is added to the high-temperature thermal reservoir at T_H.

An example of a refrigerator is a domestic refrigerator which is made up of a compressor, a condenser, an expansion valve and an evaporator. The domestic refrigerator is illustrated in Figure 5.2.3.2. Work (W) is added to drive the compressor by an electric motor, desirable heat (Q_L) is added in the evaporator and removed from the low temperature (T_L) refrigerator inner space by the working fluid (refrigerant), and heat (Q_H) is removed from the condenser from the working fluid to the high temperature (T_H) reservoir (kitchen).

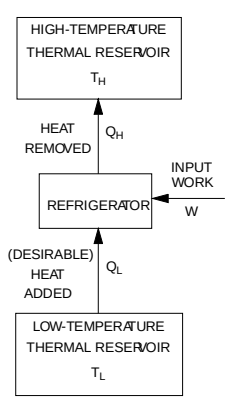

Figure 5.2.3.1. Refrigerator

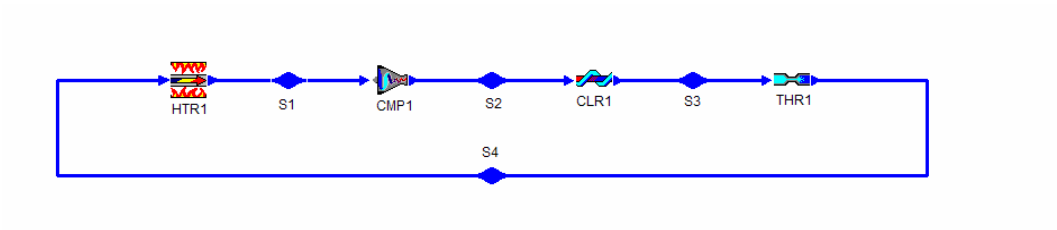

Figure 5.2.3.2. Domestic Refrigerator

The measurement of performance for a refrigerator is called the *coefficient of performance (COP)*, and is denoted by $\exists_R$. The coefficient of performance of a refrigerator is defined as the ratio of the desirable heat removed Q_L to the work input W of the refrigerator:

$$\exists_R = Q_L/W = Qdot_L/Wdot \qquad (5.2.3.1)$$

$Qdot_L$ is called *refrigerator capacity* and is usually expressed in tons of refrigeration. One *ton of refrigeration* is 3.516 kW or 12,000 Btu/h. The term "ton" is derived from the fact that the heat required to melt one ton of ice is about 12,000 Btu/h.

Notice that the coefficient of performance of a refrigerator may be larger or smaller than one.

Example 5.2.3.1.

The inside space of a refrigerator is maintained at low temperature by removing heat ($Qdot_L$) from it at a rate of 6 kW. If the COP of the refrigerator is 1.5, determine the refrigerator capacity in tons of refrigeration and the required power input to the refrigerator.

To solve this problem by CyclePad, we take the following steps:

1. Build
   A. Go to LIBRARY, select basic refrigerator cycle unsolved.
   B. Switch to analysis mode.
2. Analysis
   A. Go to cycle, then cycle properties.
   B. Input the given information: (a) COP is 1.5, (b) rate of heat removed from the refrigerator but added to the cycle is +6 kW.
3. Display results

The answers are: refrig. Capacity is 1.71 ton, and net power input is -4kW.

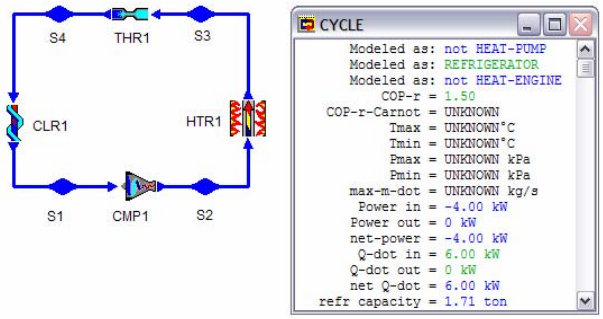

Figure E5.2.3.1. Refrigerator

Example 5.2.3.2.

The inside space of a refrigerator is maintained at 3EC by removing heat from it at a rate of 5 kW. If the required power input to the refrigerator is 2 kW. Determine the COP of the refrigerator.

To solve this problem by CyclePad, we take the following steps:

1. Build
   A. Go to LIBRARY, select basic refrigerator cycle unsolved.
   B. Switch to analysis mode.
2. Analysis
   A. Go to cycle, then cycle properties.
   B. Input the given information: (a) power input is -2 kW, (b) heat removed from the refrigerator but added to the cycle is +5 kW.
3. Display results

The answer is COP=2.50.

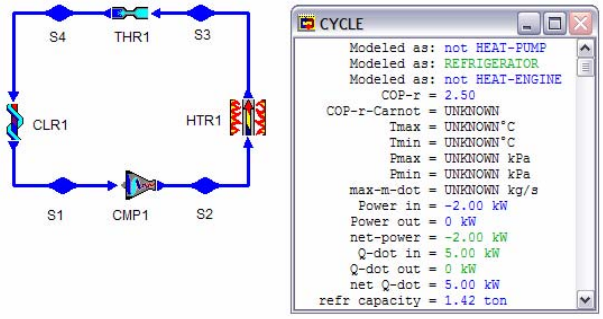

Figure E5.2.3.2. Refrigerator

Homework 5.2.3. Refrigerator

1. Is air conditioner a refrigerator?
2. Is it possible to have a refrigerator operating with one thermal reservoir?
3. Define the COP of a refrigerator.
4. Is the COP of a refrigerator always larger than 1?
5. What is a ton of refrigeration?
6. It is suggested that the kitchen in your house could be cooled in the summer by closing the kitched from the rest of the house and opening the door to the domestic electric refrigerator. Is it true or false? State the reason for your conclusion.
7. The refrigeration plant of an air conditioning system has a capacity of 12000 Btu/h. The COP of the refrigerator is Determine the power required by the compressor.
   ANSWER: -3000 Btu/h.
8. The refrigeration plant of an air conditioning system has a cooling capacity of 2400 Btu/h. The compressor power added is 1200 Btu/h. What is the COP of the refrigerator? What is the amount of heat transfer to the atmosphere?
   ANSWER: 2, 3600 Btu/h.

5.2.4. Heat Pumps

A *heat pump* is a continuous cyclic device which pumps heat to a high temperature reservoir from a low temperature reservoir at the expense of work input. The energy flow diagram of a heat pump and its thermal reservoirs are shown in Figure 5.2.4.1. Input work (W) is added to the heat pump, desirable heat (Q_H) is pumped to the high-temperature thermal reservoir at T_H, and heat (Q_L) is removed from the low-temperature thermal reservoir at T_L.

An example of a heat pump is a house heat pump which is made up of a compressor, a condenser, a throttling valve and an evaporator as illustrated in Figure 5.2.4.2. Heat (Q_H) is removed to the high-temperature house from the working fluid in the condenser, work is added to the compressor by an electric motor, and heat (Q_L) is added to the evaporator from the low-temperature outside atmospheric air in the winter season.

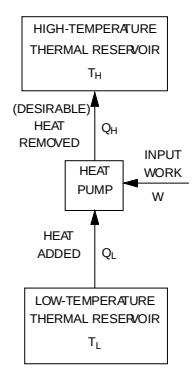

Figure 5.2.4.1. Heat pump

Notice that the energy flow diagram and hardware components of a heat pump are exactly the same as those of a refrigerator. The difference between the heat pump and the refrigerator is the function of the cyclic devices. A refrigerator is used to remove heat (Q_L) from a low temperature (T_L) thermal reservoir by adding work. A heat pump is used to add heat (Q_H) to a high temperature (T_H) thermal reservoir by adding work.

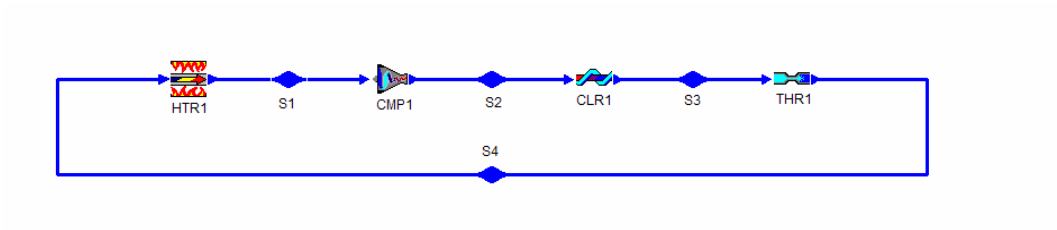

Figure 5.2.4.2. House Heat pump

The measurement of performance for a heat pump is called the coefficient of performance (COP), and is denoted by $\exists_{HP}$. The coefficient of performance of a heat pump is defined as the ratio of the desirable heat output Q_H to the work input W of the heat pump:

$$\exists_{HP}=Q_H/W=Qdot_H/Wdot \qquad (5.2.4.1)$$

Notice that the coefficient of performance of a heat pump is always larger than one.

Example 5.2.4.1.

A heat pump with a COP of 2.8 is selected to meet the heating requirements of a house and maintain it at a comfortable temperature (T_H). Heat (Q_L) is pumped from the outdoor ambient air at low temperature (T_L). The house is estimated to lose heat (Q_H) at a rate of 1000 kW. Determine the electric motor power consumed by the heat pump.

To solve this problem by CyclePad, we take the following steps:

1. Build
   A. Go to LIBRARY, select basic refrigeration cycle unsolved.
   B. Switch to analysis mode.
2. Analysis
   A. Go to cycle, then cycle properties.
   B. Input the given information: (a) COP is 2.8, (b) heat removed is -1000 kW.
3. Display results

The answer is net power=357.1 kW.

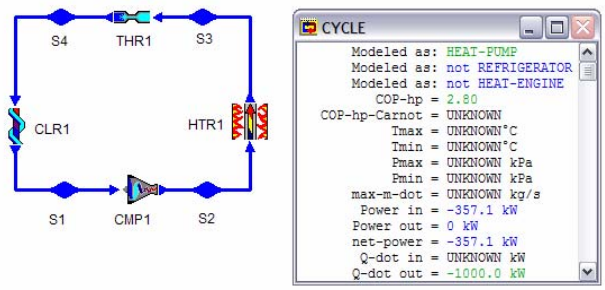

Figure E5.2.4.1. Heat pump

Example 5.2.4.2.

A heat pump is selected to meet the heating requirements of a house and maintain it at 18EC. If the outdoor temperature is 2EC, the house is estimated to lose heat at a rate of 1000 kW and the net power input to the house is 680 kW. Determine the COP of the heat pump.

To solve this problem by CyclePad, we take the following steps:

1. Build
   A. Go to LIBRARY, select basic refrigeration cycle unsolved.
   B. Switch to analysis mode.
2. Analysis
   A. Go to cycle, then cycle properties.
   B. Input the given information: (a) net power input is -680 kW, (b) heat removed is -1000 kW.
3. Display results

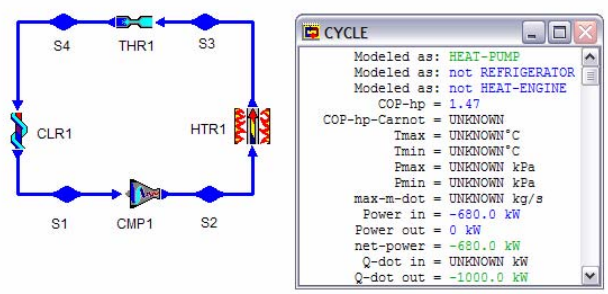

Figure E5.2.4.2. Heat pump

The answer is COP=1.47.

Homework 5.2.4. Heat Pump

1. What is the difference between a refrigerator and a heat pump?

2. A heat pump and a refrigerator are operating between the same two thermal reservoirs. Which one has a higher COP?
3. Define the COP of a heat pump.
4. Thermal efficiency of a heat engine is defined to be the ratio of energy output desirable to energy input. Would you think that efficiency is an appropriate definition to be used when a heat pump is being discussed? Why?
5. Is the COP of a heat pump always larger than 1?
6. Indicate whether the following statements are true or false:
7. A process that causes heat to be removed from one reservoir only is feasible.
8. A process that causes heat to be supplied to one reservoir only is feasible.
9. A process that causes heat to be transferred from reservoir A to reservoir B is feasible.
10. For a heat pump, COP<1.
11. For a refrigerator, COP<1.
12. A heat pump picks up 1000 kJ of heat from well water at 10 C and discharges 3000 kJ of heat to a building to maintain it at 20 C. What is the COP of the heat pump? What is the minimum required cycle net work?
    ANSWER: 1.5, 2000 kJ.

5.3. SECOND LAW STATEMENTS

The principle underlying the directionality of spontaneous change and inefficiency of a heat engine is called the *second law of thermodynamics*. This law may be stated in various equivalent ways. Among the best known statements are the following two statements.

Kelvin-Planck statement: It is impossible to construct a heat engine that produces work with heat interaction only from a single thermal reservoir. This implies that a heat engine requires at least two thermal reservoirs with different temperatures, and that it is impossible to build a heat engine that has a thermal efficiency of 100%.

Clausius statement: It is impossible to construct a heat pump or a refrigerator which moves heat from a low temperature thermal reservoir to a high temperature thermal reservoir without adding work. This implies that the coefficient of performance of a heat pump or a refrigerator is always less than infinity.

Every relevant experiment that has been conducted verifies the Second law of thermodynamics.

Homework 5.3. Second Law Statements

1. Give an equivalent statement of the Kelvin-Planck statement.
2. Give an equivalent statement of the Clausius statement.

5.4. REVERSIBLE AND IRREVERSIBLE PROCESSES

A *reversible process* is an idealized one that is performed in such a way that, at the conclusion of the process, both the system and its surroundings may be restored to their initial states without producing any changes in the rest of the universe. Any process that does not fulfill these stringent requirements is called an *irreversible process*. The factors that cause a process to be irreversible are called irreversibility factors. The irreversibility factors include friction, heat transfer across a finite temperature difference, free expansion, mixing of two fluids, chemical reactions, etc.

A process is called *internally reversible* if no irreversibilities occur within the boundaries of the system during the process. A process is called *externally reversible* if no irreversibilities occur outside the boundaries of the system during the process. A process is called *totally reversible* if no irreversibilities occur neither within nor outside the boundaries of the system during the process. A process is called *endo-reversible* if no irreversibilities occur within but outside the boundaries of the system during the process.

Reversible processes actually do not occur in nature. They serve as idealized models in which actual processes can be compared. It is generally much easier to describe a system's behavior under reversible conditions rather than irreversible ones. Thus the assumption of reversibility, although not perfect, is often a useful engineering approach.

Homework 5.2.4. Reversible and Irreversible Processes

1. Are the following natural phenomena reversible or irreversible process: a waterfall, the weathering of rocks, the rusting of iron, the tearing of a piece of paper, and combustion of a coal pile.
2. List several reversible processes.
3. List several irreversible processes.

5.5. CARNOT CYCLE

Considering the concepts of reversible processes, a reversible cycle can be carried out for given thermal reservoirs at temperatures T_H and T_L. The reversible cycle was introduced by a French engineer N.S. Carnot. The Carnot heat engine cycle on a T-s diagram as shown in Figure 5.5.1 is composed of the following four reversible processes:

1-2 reversible adiabatic (isentropic) compression
2-3 reversible isothermal heating at T_H
3-4 reversible adiabatic (isentropic) expansion
4-1 reversible isothermal cooling at T_L

Referring to Figure 5.5.1, the system undergoes a Carnot heat engine cycle in the following manner:

(A) During process 1-2, the system is thermally insulated and the temperature of the working substance is raised from the low temperature T_L to the high temperature T_H. The process is an isentropic process. The amount of heat transfer during the process is Q_{12}=ITds=0, because there is no area underneath a constant entropy (vertical) line.

(B) During process 2-3, heat is transferred isothermally to the working substance from the high temperature reservoir at T_H. This process is accomplished reversibly by bringing the system in contact with the high temperature reservoir whose temperature is equal to or infinitesimally higher than the working substance. The amount of heat transfer during the process is Q_{23}=ITds= $T_H(S_3-S_2)$, which can be represented by the area 2-3-5-6-2. Q_{23} is the amount of heat added to the Carnot cycle from a high temperature thermal reservoir.

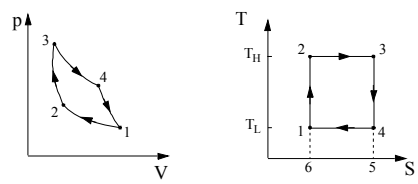

Figure 5.5.1. Carnot heat engine cycle on p-v and T-s diagram

(C) During process 3-4, the system is thermally insulated and the temperature of the working substance is decreased from the high temperature T_H to the low temperature T_L. The process is an isentropic process. The amount of heat transfer during the process is Q_{34}=ITds=0, because there is no area underneath a constant entropy (vertical) line.

(D) During process 4-1, heat is transferred isothermally from the working substance to the low temperature reservoir at T_L. This process is accomplished reversibly by bringing the system in contact with the low temperature reservoir whose temperature is equal to or infinitesimally lower than the working substance. The amount of heat transfer during the process is Q_{41}=ITds= $T_L(S_1-S_4)$, which can be represented by the area 1-4-5-6-1. Q_{41} is the amount of heat removed from the Carnot cycle to a low temperature thermal reservoir.

The net heat added to the cycle is $Q_{net}=Q_{12}+Q_{23}+Q_{34}+Q_{41}=0+T_H(S_3-S_2)+0+T_L(S_1-S_4)=(T_H-T_L)(S_4-S_1)$=[Area 2-3-5-6-2]-[area 1-4-5-6-1]=Area 1-2-3-4-1. Notice that the area 1-2-3-4-1 is the area enclosed by the cycle.

The net work produced to the cycle is $W_{net}=Q_{net}$= Area 1-2-3-4-1.

According to the definition of a heat engine efficiency , the *efficiency of the Carnot heat engine* is $0_{Carnot}=W_{net\ output}/Q_{input}$= [Area 1-2-3-4-1]/[Area 2-3-5-6-2]= $(T_H-T_L)(S_4-S_1)/[T_H(S_4-S_1)]=(T_H-T_L)/T_H$.

Or

$$0_{Carnot}=1-T_L/T_H \tag{5.5.1}$$

Example 5.5.1.

Heat is transferred to a Carnot heat engine at a rate of 500 MW from a high-temperature source at 700 EC and rejects heat to a low-temperature sink at 40 EC. Determine the power produced and the efficiency of the Carnot heat engine.

To solve this problem by CyclePad, we take the following steps:

1. Build
   A. Go to LIBRARY, select Rankine cycle unsolved.
   B. Switch to analysis mode.
2. Analysis
   A. Go to cycle, then cycle properties.
   B. Input the given information: (a) Tmax is 700EC, (b) Tmin is 40EC, (c) rate of heat added is +500 MW.
   C. After the Carnot cycle efficiency is posted, input eta-thermal=eta Carnot=67.82%.
3. Display results

The answers are 0=67.82% and net-power=339,100 kW.

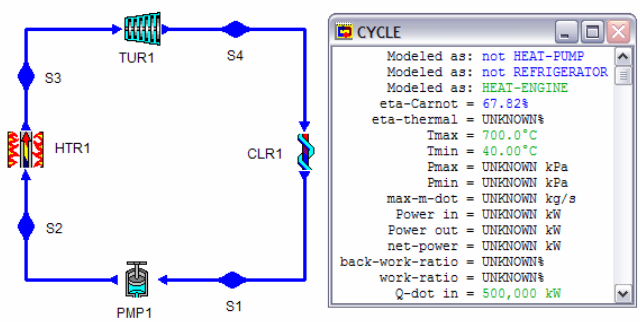

Figure E5.5.1. Carnot heat engine

Example 5.5.2

A Carnot heat engine operates between 1000EF and 100EF develops 5 hp. Determine the thermal efficiency and the rate of heat supplied.

If an inventor claims that he has developed a heat engine operating between the same temperature interval producing 5 hp and the rate of heat supplied to his engine is 10,000 Btu/h. Is it possible?

To solve this problem by CyclePad, we take the following steps:

1. Build
   A. Go to LIBRARY, select Rankine cycle unsolved.
   B. Switch to analysis mode.
2. Analysis

A. Go to cycle, then cycle result.
B. Input the given information: (a) Tmax is 1000EF, (b) Tmin is 100EF, (c) net power output is 5 hp.
C. After the Carnot cycle efficiency is posted, input eta-thermal=eta Carnot=61.66%.

3. Display results

The answer is rate of heat added for the Carnot cycle is 20,638 Btu/h. Since the Carnot cycle is the most efficient one among heat engines operating between the same two temperature reservoirs, the claim of having the rate of heat supplied to his engine is 10,000 Btu/h is impossible.

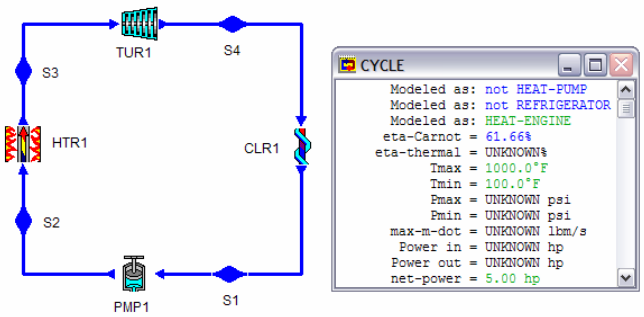

Figure E5.5.2. Carnot heat engine

Homework 5.5. Carnot Cycle

1. Does the Carnot heat engine efficiency depends on the working fluid used in the engine? Which working fluid used in the engine would be more efficient, air or water?
2. There are four distinct events that occur in the Carnot cycle. Name the events and describe each one.
3. Can a real heat engine cycle be more efficient than the Carnot heat engine efficiency?
4. What two parameters determine the limiting efficiency of any cycle?
5. What kind of shape is the Carnot cycle illustrating on a T-s diagram?
6. What is the area enclosed by the cycle area of the Carnot cycle illustrating on a T-s diagram?
7. What is the area enclosed by the cycle area of the Carnot cycle illustrating on a p-V diagram?
8. Carnot heat engine A operates between 20EC and 520EC. Carnot heat engine B operates between 20EC and 820EC. Which Carnot heat engine is more efficient than the other.
9. What are the four processes of a Carnot heat engine?

10. A Carnot heat engine operates between a high temperature thermal reservoir at T_H and a low temperature thermal reservoir at T_L. What is the efficiency of the Carnot heat engine?
11. An inventor claims to have developed a heat engine with better efficiency than the Carnot heat engine efficiency when operating between the same two thermal reservoirs. Is it possible?
12. A heat engine operates between two reservoirs, one at 1273 K and the other at 573 K. For every heat interaction of 1 kJ with the high temperature reservoir it rejects 0.6 kJ heat to the low temperature reservoir.
    (A) Is such an engine feasible? If yes, is it reversible?
    (B) If it rejects 0.3 kJ heat to the low temperature reservoir, is it feasible?
13. A Carnot heat engine operating between 300 K and 800 K is modified solely by raising both the high temperature and the low temperature by 100 K. Which of the following statements is false?
    (A) More work is done during the isothermal expansion process.
    (B) More work is done during the isentropic expansion process.
    (C) More work is done during the isothermal compression process.
    (D) More work is done during the isentropic compression process.
    (E) More cycle net work is done.
    (F) Thermal cycle efficiency is increased.
14. A Carnot heat engine operating between 300 K and 900 K is modified solely by raising the high temperature by 100 K. Is the thermal cycle efficiency increased?
15. A Carnot heat engine operates between 300 K and 1000 K. The power produced by the cycle is 100 kW. Calculate the rate of heat transferred from the high temperature reservoir, and the rate of heat transferred from the low temperature reservoir.
16. A Carnot heat engine operates between a low temperature thermal reservoir at T_L and 1000 K. The power produced by the cycle is 100 kW, and the rate of heat transferred from the high temperature reservoir is 200 kW. Determine the rate of heat transferred from the low temperature reservoir and T_L.
17. Consider the design of a power plant operating between a high-temperature reservoir at 1000ER and a low-temperature reservoir at 500ER. (A) What is the maximum possible efficiency of such a power plant? (B) for a production of 1,000,000 kW of power, what is the minimum rate of heat addition? (C)What is the maximum rate of heat rejection? (D) What is the rate of heat addition if the actual efficiency is 10 %?
    ANSWER: (A) 50%, (B) 2000000 kW, (C) 1000000 kW, (D) 10000000 kW.
18. A midshipman has invented an auto engine cycle that receives heat from combustion gases at 2500 R and rejects heat to ambient air at 500ER. He claims that for a steady fuel flow of 10 lbm/h, his engine can produce 60000 Btu/h. The heating value of the fuel is 20000 Btu/lbm. How do you evaluate his claim?
    ANSWER: possible.
19. An inventor claims to have developed a heat engine when receives 800 kJ of heat from a source at 400K and produces 400 kJ of net work while rejecting the waste heat to a sink at 300 K. Is this a reasonable claim? Why? Show your justification in detail.
    ANSWER: not reasonable claim.

20. An inventor claims to have developed a heat engine that takes in 100 Btu of heat from a source at 1000 R and produces 15 Btu of net work while rejecting the waste heat to a sink at 500 R. Is this a reasonable claim? Would you advise investing money to put this engine on the market? Show your justification in detail.
21. Which is the more effective way to increase the efficiency of a Carnot heat engine: (A) to increase T_H and keeping T_L constant, or (B) to decrease T_L and keeping T_H constant.
22. Hot water could in theory be used as heat source for the generation of work. If hot water is available at 370 K and if an infinite heat sink is available at 290 K, what is the minimum amount of water that would be required for the production of 1 kJ of work?

5.5.1. Carnot Heat Pump

If the Carnot cycle for a heat engine is carried out in the reverse direction, the result will be either a *Carnot heat pump* or a Carnot refrigerator. Such a cycle is shown in Figure 5.5.2. Using the same graphical explanation that was used in the Carnot heat engine, the heat added from the low temperature reservoir at T_L is area 1-4-5-6-1. Q_{41} is the amount of heat added to the Carnot cycle from a low temperature thermal reservoir.

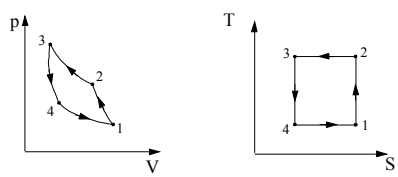

Figure 5.5.2. Carnot heat pump or Carnot refrigerator cycle on p-v and T-s diagram

The net heat added to the cycle is $Q_{net}=Q_{12}+Q_{23}+Q_{34}+Q_{41}=0+T_H(S_3-S_2)+0+T_L(S_1-S_4)=(T_H-T_L)(S_4-S_1)$=[Area 2-3-5-6-2]-[area 1-4-5-6-1]=Area 1-2-3-4-1. Notice that the area 1-2-3-4-1 is the area enclosed by the cycle.

The net work added to the cycle is $W_{net}=Q_{net}$= Area 1-2-3-4-1. According to the COP (∃) definition of a heat pump, the *COP of the Carnot refrigerator* is

$\exists_{Carnot,R}=Q_{desirable\ output}/W_{input}$= [Area 4-1-5-6-4]/[Area 1-2-3-4-1]= $(T_L)(S_2-S_3)/[(T_H-T_L)(S_2-S_3)]=T_L/(T_H-T_L)$.

or

$$\exists_{Carnot,R}=1/(T_H/T_L-1) \tag{5.5.2}$$

The net work added to the cycle is $W_{net}=Q_{net}$= Area 1-2-3-4-1. According to the COP (∃) definition of a heat pump, the *COP of the Carnot heat pump* is

$\exists_{Carnot,HP}=Q_{desirable\ output}/W_{input}=$ [Area 2-3-5-6-2]/[Area 1-2-3-4-1]= $(T_H)(S_2-S_3)/[(T_H-T_L)(S_2-S_3)]=T_H/(T_H-T_L)$.

or

$$\exists_{Carnot,HP}=1/(1-T_L/T_H) \tag{5.5.3}$$

Referring to Figure 5.5.2, the system undergoes a Carnot heat pump or Carnot refrigerator cycle in the following manner:

(A) During process 1-2, the system is thermally insulated and the temperature of the working substance is raised from the low temperature T_L to the high temperature T_H.
(B) During process 2-3, heat is transferred isothermally from the working substance to the high temperature reservoir at T_H. This process is accomplished reversibly by bringing the system in contact with the high temperature reservoir whose temperature is equal to or infinitesimally lower than the working substance.
(C) During process 3-4, the system is thermally insulated and the temperature of the working substance is decreased from the high temperature T_H to the low temperature T_L.
(D) During process 4-1, heat is transferred isothermally to the working substance from the low temperature reservoir at T_L. This process is accomplished reversibly by bringing the system in contact with the low temperature reservoir whose temperature is equal to or infinitesimally higher than the working substance.

Example 5.5.3.

An inventor claims to have developed a refrigerator that removes heat from a region at 270 K and transfer it to a thermal reservoir at 540 K while maintaining a COP of 8.5. Is this claim reasonable?

Solution: To solve this problem, we take the following steps:

1. From Eq. (5.5.2), we have $\exists_{Carnot,R}=1/(T_H/T_L-1)=1/(540/270-1)=1$.
2. Since the Carnot refrigerator has the maximum COP, the claim of 8.5 is not valid.

Homework 5.5.1. Carnot Heat Pump and Carnot Refrigerator

1. What is the relationship between the COP of a Carnot refrigerator and the COP of a Carnot heat pump when the two cycles are operating between the same two thermal reservoirs?
2. A reversible heat pump and a Carnot heat pump operate between the same two thermal reservoirs. Which heat pump has higher COP?
3. An irreversible heat pump and a Carnot heat pump operate between the same two thermal reservoirs. Which heat pump has higher COP?
   Can a real heat pump have higher COP than the COP of the Carnot heat pump?
4. Can a real refrigerator have higher COP than the COP of the Carnot refrigerator?

5. A Carnot refrigerator operates in a room in which the temperature is 27EC. The refrigerator consumes 500 W of power when operating, and has a COP of 4. Determine the rate of heat removal from the refrigerated space, and the temperature of the refrigerated space.
   ANSWER: 2000 W, -33EC.
6. An air conditioning system is used to maintain a house at 60^{E}F when the outside air temperature is 100^{E}F. If heat enters the house from the outside at a rate of 5,000 Btu/h, Find the COP of the Carnot refrigerator, and the minimum possible power (in Btu/h) required for the air-conditioner.
   ANSWER: 13, 384.6 Btu/h.
7. A heat pump is used to maintain a house at 60^{E}F when the outside air temperature is 40^{E}F. If heat leaves the house at a rate of 10,000 Btu/h, what is the minimum amount of power (in Btu/h) required to run the heat pump?
   ANSWER: 385 Btu/h.
8. A Carnot power cycle using carbon mono-oxide as a working fluid has a thermal efficiency of 40 percent. At the beginning of the isothermal heating process, the temperature is 500 K. Determine the temperature of the low temperature thermal reservoir, and the COP (coefficient of performance) for the refrigerator obtained by reversing the power cycle.
   ANSWER: 300 K, 1.5.
9. A Carnot refrigerator operates between the temperatures of 268 K and 283 K. The power consumption is 10 kW. Find the change of the COP if the maximum temperature of the cycle increases by 2 K and the minimum temperature of the cycle decreases by 2 K.
   ANSWER: -0.137 (0.9333-0.9470).
10. A heat pump is to be used to maintain a building at an average temperature of 295 K. What is the minimum power required to do this when the outside temperature is 276 K and the average total heat loss is 250 kW?
    ANSWER: -16.10 kW.
11. A refrigerator extracts 291 kW from a cooled space at 253 K, while the ambient temperature is 293 K.
    (A) Find the maximum COP.
    (B) Find the minimum power consumption.
12. Find the heat transfer in the air cooler (heat source).
    ANSWER: (A) 6.325, (B) 46.01 kW, (C) 337.0 kW.
13. A heat pump is used to heat a system and maintain it at 300 K. On a winter day when the outdoor air temperature is 270 K, the system is estimated to lose heat at a rate of 5,000 kW. Determine the minimum power required to operate this heat pump. What would be the COP at this condition.
    ANSWER: 555.6 kW, 10.
14. Determine the maximum possible COP for a heat pump operating between an ambient temperature of -23EC and the interior of a house at 27EC.
    ANSWER: 6.
15. A refrigerator is to be built to cool water from 310 K to 290 K continuously. Heat is to be discarded to atmosphere at a temperature of 315 K. What is the minimum

power requirement of the refrigerator if 1 m^3 of water is to be cooled? How much heat must be discarded to the atmosphere?

16. A ten-ton capacity refrigerator is cooling a space to 263 K by transferring heat to the atmosphere at 300 K. By assuming a Carnot refrigerator, calculate the power required to drive the refrigerator and the COP.
17. A Carnot refrigerator operates between 260 K and 290 K. Find the change in COP if the lower temperature is lowered by 10 K and the high temperature is increased by 5 K.
18. A Carnot air conditioning unit operates between 303 K and 290 K. Find the change in COP if the lower temperature is lowered by 1 K.
19. A Carnot heat pump operates between 310 K and 280 K. Find the change in COP if the high temperature is increased by 1 K.
20. A Carnot heat pump operates between 310 K and 280 K. Find the change in COP if the lower temperature is lowered by 10 K and the high temperature is increased by 5 K.

5.6. CARNOT COROLLARIES

Six corollaries deduced from the Carnot cycle are of great use in comparing the performance of cycles. The corollaries are:

(1) The efficiency of the Carnot heat engine operating between a fixed high-temperature heat source thermal reservoir at T_H and a fixed low-temperature heat sink thermal reservoir at T_L is independent of the working substance.
(2) No heat engine operating between a fixed high-temperature heat source thermal reservoir and a fixed low-temperature heat sink thermal reservoir can be more efficient than a Carnot heat engine operating between the same two thermal reservoirs.
(3) All reversible heat engines operating between a fixed high-temperature heat source thermal reservoir and a fixed low-temperature heat sink thermal reservoir have the same efficiency.
(4) The COP (coefficient of performance) of the Carnot heat pump (or refrigerator) operating between a fixed high-temperature thermal reservoir at T_H and a fixed low-temperature thermal reservoir at T_L is independent of the working substance.
(5) No heat pump (or refrigerator) operating between a fixed high-temperature thermal reservoir and a fixed low-temperature thermal reservoir can have higher COP (coefficient of performance) than a Carnot heat pump (or refrigerator) operating between the same two thermal reservoirs.
(6) All reversible heat pumps (or refrigerators) operating between a fixed high-temperature thermal reservoir and a fixed low-temperature thermal reservoir have the same COP (coefficient of performance).

These corollaries can be proven by demonstrating that the violation of any of the corollary results in the violation of the Second law of thermodynamics.

5.7. THE THERMODYNAMIC TEMPERATURE SCALE

A temperature scale that is independent of the properties of the substance that are used to measure temperature is called a thermodynamic temperature scale. With the aid of the first Carnot corollary, W.T. Kelvin devised such a temperature scale.

It was shown in previous sections that the efficiency of a Carnot heat engine operating between a fixed high-temperature heat source thermal reservoir at T_H and a fixed low-temperature heat sink thermal reservoir at T_L is a function of the temperatures of the thermal reservoirs only. The function was found by Kelvin as

$$0=1-T_L/T_H \tag{5.7.1}$$

This thermodynamic temperature scale is called the *Kelvin temperature* scale. On this scale, the temperature varies from zero to infinity.

Similarly, for a Carnot heat pump and a Carnot refrigerator operating between a fixed high-temperature thermal reservoir at T_H and a fixed low-temperature thermal reservoir at T_L, the COP (coefficient of performance) of a Carnot heat pump and a Carnot refrigerator are

$$\exists_R=T_L/(T_H-T_L) \tag{5.7.2}$$

$$\exists_{HP}=T_H/(T_H-T_L) \tag{5.7.2}$$

The three expressions give the maximum values for any cycle operating between two thermal reservoirs and can be used as standards for comparison for actual cycles.

5.8. SUMMARY

The Second law of thermodynamics is needed to give the direction of a process. A process will not occur unless both the first law of thermodynamics and the Second law of thermodynamics are satisfied.

A thermal reservoir is a huge system which can absorb or reject energy without changing its temperature.

A heat engine is a continuous cyclic device which produces output work by adding input heat. The efficiency of a heat engine is $0=W_{output}/Q_{input}$.

A heat pump is a continuous cyclic device which pumps output heat to a high temperature reservoir from a low temperature reservoir by adding input work. The coefficient of performance (COP) of a heat pump is $\exists_{HP}=Q_{output}/W_{input}$.

A refrigerator is a continuous cyclic device which removes output heat from a low temperature reservoir to a high temperature reservoir by adding input work. The coefficient of performance (COP) of a refrigerator is $\exists_R=Q_{output}/W_{input}$.

A heat engine, heat pump and refrigerator all are required to have at least two thermal reservoirs with different temperature.

The statements of the second law of thermodynamics state that no heat engine can be 100% efficient, and that no heat pump nor refrigerator can have an infinity COP.

A reversible process is one that at the conclusion of the process, both the system and its surroundings may be restored to their initial states without producing any changes in the rest of the universe. Otherwise, it is an irreversible process.

The Carnot cycle, that is composed of four reversible processes, is the most efficient cycle operating between two fixed thermal reservoirs with different temperature. All reversible heat engines (or heat pumps or refrigerators) operating between two fixed thermal reservoirs with different temperature have the same efficient (COP) as the Carnot cycle efficiency (COP).

The Carnot heat engine efficiency is $0_{Carenot}=1-T_L/T_H$.

The Carnot heat pump COP is $\exists_{Carenot}=1/(1-T_L/T_H)$.

The Carnot refrigerator COP is $\exists_{Carenot}=1/(T_H/T_L-1)$.

Chapter 6

ENTROPY

6.1. CLAUSIUS INEQUALITY

When a system is carried through a complete cycle, the integral of (∗Q/T) around the cycle is less than or equal to zero. The statement is the *Clausius inequality*.

Applying Carnot engine efficiency to a reversible heat engine gives

$$0_R = (1-Q_L/Q_H)_R = 1-T_L/T_H \tag{6.1.1}$$

Hence, $Q_L/T_L-Q_H/T_H = 0$ for a reversible cycle. Extending to integrals of infinitesimals, we have

$$I_{Cycle}\ (*Q/T)_R = 0 \tag{6.1.2}$$

For an irreversible cycle between the same T_L and T_H, the efficiency of an irreversible heat engine is less than that of the Carnot heat engine.

$$0_I < 0_R, \tag{6.1.3}$$

or

$$(1-Q_L/Q_H)_I < (1-T_L/T_H) \tag{6.1.4}$$

Hence, $Q_L/T_L-Q_H/T_H < 0$ for an irreversible cycle. Similarly, extending to integrals of infinitesimals, we have

$$I_{Cycle}\ (*Q/T)_I < 0 \tag{6.1.5}$$

Homework 6.1. Clausius Inequality

1. A proposed steam power plant has the following data:
   heat added to the boiler (at 200EC)=2600 kJ/kg

heat rejected from the condenser (at 50EC)=2263 kJ/kg
adiabatic pump with 80% adiabatic efficiency
adiabatic turbine with 90% adiabatic efficiency
Does this plant violate the Clausius theorem? Show your detailed justification.
ANSWER: not violated.

6.2. ENTROPY AND HEAT

A property of a system is some calculable or measurable quantity of that system whose value depends only on the state of the system. If we reexamine the operation of a reversible heat engine, we shall find that the mathematical term $(*Q/T)_{reversible}$ behaves just this way:

$$I_{cycle}\ (*Q/T)_{reversible}=0. \tag{6.2.1}$$

This property $(*Q/T)_{reversible}$, called *entropy* and denoted by S was discovered in 1862 by Rudolf Clausius who named it entropy. Entropy is a microscopic property associated with the microscopic energy transfer, Q. Entropy is similar to volume which is a macroscopic property associated with the macroscopic energy transfer, W. Phenomenologically, entropy is related to the molecular disorder of a system associated with the microscopic energy transfer, Q.

On a microscopic point of view, entropy can be considered as a measure of randomness or disorder. Consider two different inert gases that are initially separated from each other. If the partition separating the two gases is removed, the gases will quickly mix without outside influence (even if the gases are at the same temperature and pressure). Although the net energy content of this mixture has not changed, the entropy of the mixture is greater than the total entropy of the individual gases before mixing. The Second law indicates that the reverse process (i.e. the gases separating without outside influence) will never occur as this be a state of “less disorder” and lower entropy.

Let us consider another simple example. Water in solid phase is called ice and has a very regular, repeating arrangement of molecules. This arrangement is called a crystalline structure. We can examine an ice crystal and determine the location of each of the molecules. If heat is added, the ice is melted into liquid water. The molecular pattern is no longer regular, and our ability to state exactly the location of individual molecules is gone. The liquid has a more random structure than the ice, thus it has a higher entropy. If more heat is added, the liquid water is boiled and becomes the vapor phase called steam. This causes the molecules to move even faster and over greater distances, so we have even less of a chance to predict an individual molecule’s location. Thus the steam has an even greater level of entropy than either the liquid water or the ice.

With these two examples, it is seen that both irreversibility within a system and heat transfer added to the system increase the entropy of the system. For a reversible process, the entropy change is caused by heat transfer added to the system only.

While energy is conserved and hence can not be used up or exhausted, the usefulness of a quantity of energy does decrease through usage. Energy is degraded through usage, eventually to the point of zero usefulness. Entropy is a negative measure associated with energy usefulness. An increase in entropy corresponds to a decrease in energy usefulness. Hence, entropy is a measure of dis-usefulness.

It is rather difficult to explain a microscopic property with a macroscopic approach. To fully understand the idea of entropy, one should learn it from microscopic thermodynamics or called statistical thermodynamics.

It can be proven that the quantity $I(*Q/T)_{reversible}$ is identical for two different processes (1-A-2 and 1-B-2) with identical end states 1 and 2 as shown in Figure 6.2.1, i.e.

$$I_{process\ 1–A-2}\ (*Q/T)_{reversible}=I_{process\ 1–B-2}\ (*Q/T)_{reversible} \tag{6.2.2}$$

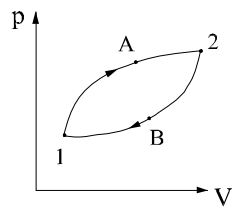

Figure 6.2.1. p-v diagram

Referring to the p-v diagram as shown in Figure 6.2.1, the two processes 1-A-2 and 1-B-2 are arbitrarily chosen. Therefore $I_{process}\ (*Q/T)_{reversible}$ is independent of path and related to states 1 and 2 only. In order words, it is a property. The name entropy and the symbol S are given to this property. Restate Equations (6.2.1) and (6.2.2), we have

$$I_{cycle}\ (*Q/T)_{reversible}=I_{cycle}(dS)= 0. \tag{6.2.3}$$

and

$$I_{process\ 1–A-2}\ (*Q/T)_{reversible}=I_{process\ 1–B-2}\ (*Q/T)_{reversible}= S_2 - S_1 \tag{6.2.4}$$

The quantity $(S_2 - S_1)$ represents the entropy change of a system from state 1 to state 2. Note that the equality in the above equations holds for reversible cycles and processes only.

Equation (6.2.3) is the macroscopic definition of entropy. Note that entropy is defined only for reversible processes. and a change in entropy may be calculated with

$$)S=S_2 - S_1=I_{process\ 1–2}\ (*Q/T)_{reversible} \tag{6.2.5}$$

or, in differential form

$$dS= (*Q/T)_{reversible} \tag{6.2.6}$$

or,

$$(*Q)_{reversible} =Tds \tag{6.2.7}$$

Homework 6.2. Entropy and Heat

1. Do you understand entropy? Why the concept of entropy is difficult to engineering students?
2. Which of the following statements is true? In any practical thermodynamic process, the entropy of an isolated system will
   (A) Decrease only
   (B) Increase only
   (C) Remain the same
   (D) Increase and then decrease
   (E) Decrease and then increase.
3. Which of the following statements is true? Entropy is
   (A) The change in enthalpy of a system
   (B) The change in internal energy of a system
   (C) A property of a system
   (D) The heat capacity of a system
   (E) The heat content of a system
4. For an irreversible process occured in an isolated system, which following expression best evaluates the change of entropy of the isolated system?
   (A))S=0
   (B))S<0
   (C))S>0
5. For an irreversible isothermal process occured in a system with temperature T, which following expression best evaluates the change of entropy of the isolated system?
   (A))S=0
   (B))S<0
   (C))S>0
   (D))S=Q/T
   (E))S>Q/T
   (F))S<Q/T
6. Which of the following statements is true? Entropy has the unit of
   (A) Heat
   (B) Work
   (C) Energy
   (D) Heat capacity
   (E) Temperature
7. An insulated piston-cylinder device initially contains 10 ft^3 of air at 20 psia and 60EF. Air is now heated for 10 minutes by a 200 Btu/min electric heater placed inside the cylinder. The pressure of air is maintained constant during this process. Determine the entropy change of air.
   ANSWER: 2.27 Btu/EF.
8. Find the change in specific entropy as air is heated from 560 to 1260 R while pressure drops from 50 to 40 psia.
   ANSWER: 0.2096 Btu/[lbm(EF)].

6.3. HEAT AND WORK AS AREAS

Since $(*Q)_{reversible}$ =Tds, temperature and entropy are the natural thermodynamic coordinates for reversible heat. One of the great advantages of a T-s diagram is that the reversible heat transfer of a process may be presented by the area underneath the process as shown in the following T-s diagram.

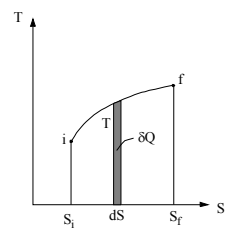

Figure 6.3.1. T-s diagram

Homework 6. 3. Heat and Work as Areas

1. A triangle cycle is made of three processes: process 1-2 is isentropic from state 1 (400 K, 0.5 kJ/kg(K)) to state 2 (800 K, 0.5 kJ/kg(K)), process 2-3 is isothermal from state 2 (800 K, 0.5 kJ/kg(K)) to state 3 (800 K, 1.5 kJ/kg(K)), and process 3-1 is linear from state 3 (800 K, 1.5 kJ/kg(K)) to state 1 (400 K, 0.5 kJ/kg(K)). Draw the cycle on a T-s diagram. Determine the heat added in the processes, net heat added in the cycle, net work added in the cycle, and cycle efficiency.
2. A triangle cycle is made of three processes: process 1-2 is isentropic from state 1 (400 K, 0.5 kJ/kg(K)) to state 2 (800 K, 0.5 kJ/kg(K)), process 2-3 is linear from state 2 (800 K, 0.5 kJ/kg(K)) to state 3 (400 K, 1.5 kJ/kg(K)), and process 3-1 is isothermal from state 3 (400 K, 1.5 kJ/kg(K)) to state 1 (400 K, 0.5 kJ/kg(K)). Draw the cycle on a T-s diagram. Determine the heat added in the processes, net heat added in the cycle, net work added in the cycle, and cycle efficiency.

6.4. ENTROPY AND CARNOT CYCLES

The temperature and entropy (T-s) diagram of the Carnot reversible heat engine cycle is shown in Figure 6.4.1. The Carnot cycle which operates between a high temperature (T_H) thermal reservoir and a low temperature (T_L) thermal reservoir is composed of the following four reversible processes:

1-2 isentropic compression
2-3 isothermal heating
3-4 isentropic expansion

4-1 isothermal cooling

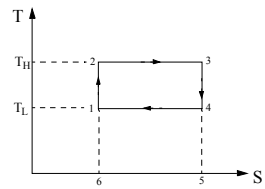

Figure 6.4.1. Carnot T-s diagram

Notice that since process 1-2 and process 3-4 are both isentropic, they appear as vertical lines on the diagram. The cycle has a rectangular shape regardless of the working fluid used in the heat engine. Since the heat transfer for each reversible process is represented by the area under the process curve on the T-S diagram, we have

$$Q_{12} = 0 \tag{6.4.1}$$

$$Q_{23} = Q_H = T_H (S_3 - S_2) \tag{6.4.2}$$

$$Q_{34} = 0 \tag{6.4.3}$$

and

$$Q_{41} = Q_L = T_L (S_1 - S_4) \tag{6.4.4}$$

The ratio of the heat transfer quantities can be written as

$$Q_H/Q_L = T_H/T_L \tag{6.4.5}$$

The cycle net work (W_{net}), which is equal to the cycle net heat transfer (Q_{net}) can be written as

$$W_{net}= Q_{net}=Q_H + Q_L \tag{6.4.6}$$

The cycle net work (W_{net}) is the area enclosed by the cycle.
The Carnot cycle efficiency (0_{Carnot}) is therefore

$$0_{Carnot}=W_{net}/Q_H=1-T_L/T_H \tag{6.4.7}$$

The Carnot cycle efficiency (0_{Carnot}) is obtained directly using the proper thermodynamic T-S diagram. Again, it demonstrates that Equation (6.4.7) is valid regardless of the working fluid employed in the Carnot reversible heat engine cycle.

6.5. SECOND LAW OF THERMODYNAMICS FOR CLOSED SYSTEMS

It is difficult to explain the microscopic property entropy with a macroscopic point of view. A macroscopic analogy of entropy is herewith given in the following and hopefully will aid the understanding of entropy to the readers.

A person walks down from an initial position on a constant slope mountain path. Each step downward is equivalent to one foot downward in elevation. A position is a state. Elevation is a property, because it has a unique value at a certain position (state). A path is a process which is a change of positions. A step is a measurement quantity. Consider the following two cases:

Case A: The path is a firm path. If the person walks down 10 steps, his elevation changes is 10 feet. It will take the person walk back 10 steps to get back to his initial position without any surrounding help. This process is therefore a reversible process. The elevation change (10 feet) is equal to the measurement of steps (10 steps).

Case B: It snows and the path is covered by a layer of snow and becomes slippery. If the person walks down on the slippery path 10 steps, his elevation changes is going to be more than 10 feet. It will take the person walk back more than 10 steps to get back to his initial position without any surrounding help. This process is therefore an irreversible process. The elevation change (more than 10 feet) is larger than the measurement of steps (10 steps).

The conclusion of both cases is therefore

Change of elevation is either equal or larger than the measurement steps

which is corresponding to

Change of property is either equal or larger than the measurement quantity

or, thermodynamic specifically, equivalent to

Change of entropy is either equal or larger than the measurement (∗Q/T), i.e.

$$dS = (*Q/T)_{rev} \text{ or } dS > (*Q/T)_{rev} \tag{6.5.1}$$

Where T is the absolute temperature at the boundary of the system where the differential amount of heat (∗Q) is transferred between the system and its surroundings, the inequality holds for an irreversible process and the equality holds for a reversible process.

The inequality in equation (6.5.1) reminds us that the entropy change of a closed system during an irreversible process is always greater than the entropy transfer. Therefore, some entropy must be generated during an irreversible process. The *entropy generation* ($S_{generation}$) during the process is created by irreversibilities. Equation (6.5.1) can be rewritten as

$$)S=S_2 - S_1=I_{process\ 1-2}\ (*Q/T) + S_{generation} \tag{6.5.2}$$

Where $S_{generation}$ is a non-negative term which depends on the irreversibilities during the process 1-2 and therefore is not a property of the system.

$S_{generation} > 0$ for irreversible processes, and $S_{generation} = 0$ for reversible processes.

Equation (6.5.1) is the mathematical form of the *Second law of thermodynamics for a closed system*. The Second law of thermodynamics states that the change in entropy of a closed system is greater than or equal to the sum of the heat transfers divided by the corresponding absolute temperatures of the boundary.

We may reach the following conclusions regarding the entropy change of a closed system.

1. For an adiabatic (Q=0) closed system, the entropy will increase due to internal irreversibilities. The entropy is constant (S=constant, or)S=0) only during a reversible adiabatic process.
2. A reversible adiabatic process is called an isentropic or a constant entropy process. Notice that an isentropic implies the process is adiabatic, but an adiabatic process is not always an isentropic process.
3. For an isolated system, which has no interactions with its surroundings including mass and heat transfers, the entropy will keep increasing ()S>0) due to internal irreversibility activities within the system.
4. The entropy value of an isolated system reaches its maximum value ($S_{maximum}$) when there is no further internal irreversibility activity within the system.
5. A system may have several parts. The entropy value of an isolated system will no longer change once the system reaches its ultimate equilibrium state (equilibrium among all parts).
6. The universe is an isolated system. The entropy of the universe will keep increasing due to internal irreversibilities until the universe is dead.

Homework 6.5. Entropy and Second Law

1. Can the entropy of a closed system ever decrease?
2. How many ways that the entropy of a closed system can be increased?
3. An inventor claims to have developed an adiabatic device that executes a steady state expansion process in which the entropy of the surroundings decreases at 5 kJ/(Ksec). Is this possible? Why or why not?
   ANSWER: impossible.
4. Air is compressed in a piston-cylinder set up from 516.3 ER and 10 ft^3/lbm (state 1) to 1350 R, 500 psia and 1 ft^3/lbm (state 2). Heat in then added to the air in a constant volume process 2-3 until the pressure reaches 900 psia. More heat is added to the air in a constant pressure process 3-4 until the temperature reaches 5000ER.
   Determine: (A) the entropy change of the air in the adiabatic process, (s_2-s_1) Btu/lbm(ER), (B) Is the process adiabatic? (C) the amount of work added to the air in process 1-2, w_{12}, (D) the entropy change of the air in the constant volume process, (s_3-s_2) in Btu/lbm(ER), (E) the entropy change of the air in the constant pressure

process, (s_4-s_3) in Btu/lbm(ER), (F) the entropy change of the air from state 1 to state 4, (s_4-s_1) in Btu/lbm(ER), (G) the amount of work added to the air in process 2-3, w_{23} in Btu/lbm, (H) the amount of heat added to the air in process 2-3, q_{23} in Btu/lbm, and (I) the amount of heat added to the air in process 3-4, q_{34} in Btu/lbm.
ANSWER: (A) 0.0068 Btu/[lbm(ER)], (B) no, (C) -136.8 Btu/lbm, (D) 0.1006 Btu/[lbm(ER)], (E) 0.1730 Btu/[lbm(ER)], (F) 0.2804 Btu/[lbm(ER)], (G) 0, (H) 184.9 Btu/lbm, (I) 615.9 Btu/lbm.

6.6. SECOND LAW OF THERMODYNAMICS FOR OPEN SYSTEMS

An open system permits mass and energy interactions between the system and its surroundings. The mass transfer carries the property entropy into and out of the system. Therefore the change in entropy within the open system is modified by the mass interaction. The statement of the *Second law of thermodynamics for open systems* is:

The change in entropy within the open system minus the net entropy transported into the open system with the mass flow is greater than or equal to the sum of the heat transfer divided by the corresponding absolute temperatures.

$$(S_2 - S_1) -[(mdot)_i (s_i) - (mdot)_e (s_e)]()t) =[I_{process\ 1-2} (*Qdot/T) + (Sdot)_{generation}]()t) \quad (6.6.1)$$

Where (S_2 - S_1) is the change in entropy within the open system from time t_1 to t_2, $(mdot)_i$ (s_i) is the rate of entropy flow in with the mass at inlet section of the open system during time t_1 to t_2, $(mdot)_e$ (s_e) is the rate of entropy flow out with the mass at exit section of the open system during time t_1 to t_2, [$(mdot)_i$ (s_i) - $(mdot)_e$ (s_e)]()t) is the net entropy transported into the open system with the mass flow during time t_1 to t_2, $I_{process\ 1-2}$ (*Qdot/T)()t) is the contribution to the entropy change due to the sum of the heat transfer divided by the corresponding absolute temperatures during time t_1 to t_2, and [$(Sdot)_{generation}$], ()t) is a non-negative contribution to the entropy change term which depends on the irreversibilities during time t_1 to t_2.

For steady state and steady flow, Equation (6.6.1) is reduced to

$$(mdot)_e (s_e) - (mdot)_i (s_i) = I_{process\ 1-2} (*Qdot/T) + (Sdot)_{generation} \quad (6.6.2)$$

For no heat transfer across the boundary surface, Equation (6.6.2) is reduced to

$$s_e - s_i = (s)_{generation} \quad (6.6.3)$$

Homework 6. 6. Second Law of Thermodynamics for Open Systems

1. Can $(s)_{generation}$ ever be negative?
2. The Second law of thermodynamics for open systems is
   (S_2 - S_1) -[$(mdot)_i$ (s_i) - $(mdot)_e$ (s_e)]()t) =[$I_{process\ 1-2}$ (*Qdot/T) + $(Sdot)_{generation}$]()t)
   What is the physical meaning of each term?
3. Is entropy change of an open system always non-negative?
4. Is entropy change of an adiabatic open system always non-negative?

6.7. PROPERTY RELATIONSHIPS

6.7.1. Pure Substance

Entropy has been defined as a property of a system, and the specific entropy (s) is tabulated in the conventional tables of thermodynamics. It is listed the same way as internal energy (u) and enthalpy (h). Again, the values listed on the tables are not absolute entropy values because we are interested only in the entropy changes.

Example 6.7.1. 1.

A piston-cylinder device contains 1 kg of saturated R-134a vapor at -5EC. An amount work is added to compress the vapor until the pressure and temperature are 1 Mpa and 50EC. Determine the amount of work added, amount of heat added, and entropy change of the refrigerant during this processs.

To solve this problem by CyclePad, we take the following steps:

1. Build
   (A) Take a begin, a compression device, and an end from the closed-system inventory shop and connect them.
   (B) Switch to analysis mode.
2. Analysis
   (A) Input the given information: (a) working fluid is R-134a, (b) the initial R-134a mass, quality and temperature of the process are 1 kg, 1 and -5EC, and (c) the final pressure and temperature of the process are 1 Mpa and 50EC.
3. Display results

The answers are W=-27.93 kJ, Q=-13.86 kJ and)S=1.75-1.73=0.02 kJ/K.

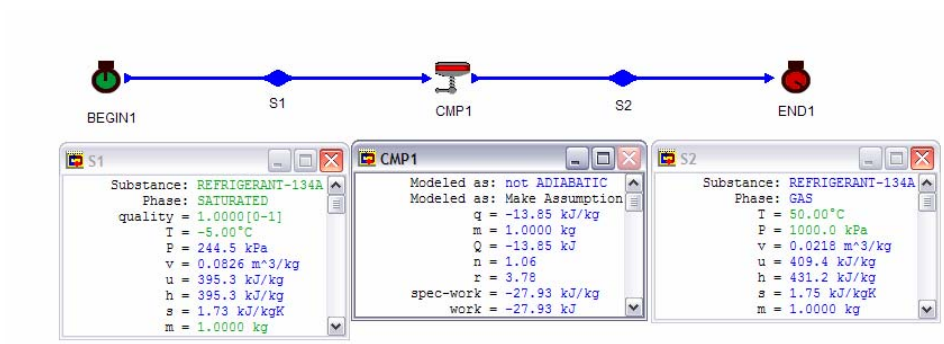

Figure E6.7.1.1. Entropy change

Example 6.7.1.2.

A rigid tank contains 0.2 kg of water vapor at 100 kPa and 170EC. An amount of heat is added to heat the vapor until the pressure is 400 kPa. Determine the final temperature and entropy change of the water vapor, and the amount of work and heat added during this process.

To solve this problem by CyclePad, we take the following steps:

1. Build
   (A) Take a begin, a heating device, and an end from the closed-system inventory shop and connect them.
   (B) Switch to analysis mode.
2. Analysis
   (A) Input the given information: (a) working fluid is water, (b) the initial mass, pressure and temperature of the process are 0.2 kg, 100 kPa and 170EC, (c) the final pressure of the process is 400 kpa, (d) the process is constant volume (isochoric), and (e) W=0 kJ.
3. Display results

The answers are T=1487 EC)S=0.2(10.18-7.70)=0.496 kJ/K, W=0 kJ, and Q=498.5 kJ.

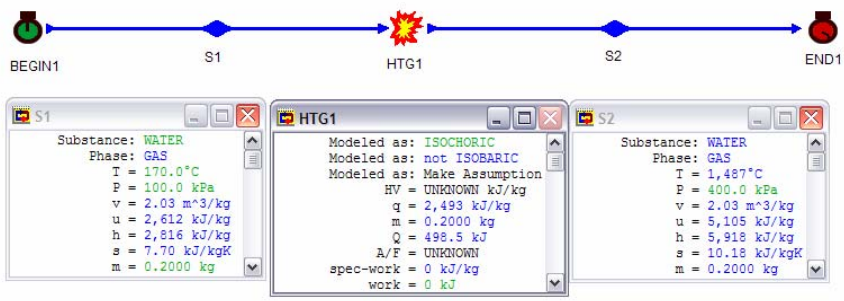

Figure E6.7.1.2. Entropy change

Example 6.7.1.3.

Steam at a mass flow rate of 1 kg/s enters an adiabatic turbine at 4000 kPa and 500EC and leaves at 10 kPa and a quality of 0.9. Determine the power produced by the turbine and the rate of entropy change of the steam.

To solve this problem by CyclePad, we take the following steps:

1. Build
   (A) Take a source, a turbine, and a sink from the open-system inventory shop and connect them.
   (B) Switch to analysis mode.
2. Analysis
   (A) Assume the turbine is adiabatic.
   (B) Input the given information: (a) working fluid is water, (b) the inlet pressure and temperature of the turbine are 4000 kPa and 500EC, (c) the exit pressure and quality of the turbine are 10 kPa and 0.9, and (d) the mass flow rate is 1 kg/s.
3. Display results

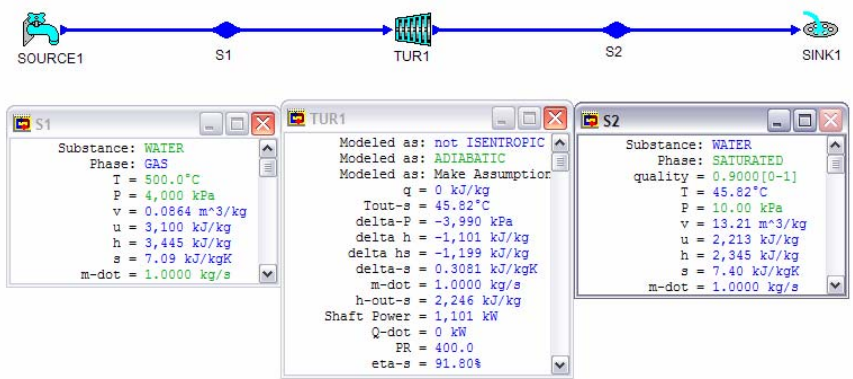

Figure E6.7.1.3. Entropy relationship

The answers are Wdot=1101 kW and)Sdot=1(0.3081)=0.3081 kJ/K.

Example 6.7.1.4.

Determine the rate of entropy change and the pump power input required to an adiabatic pump for a mass flow rate of 0.7 kg/s saturated water from 100 kPa to 2 Mpa and 101EC.

To solve this problem by CyclePad, we take the following steps:

1. Build
   (A) Take a source, a pump, and a sink from the open-system inventory shop and connect them.
   (B) Switch to analysis mode.

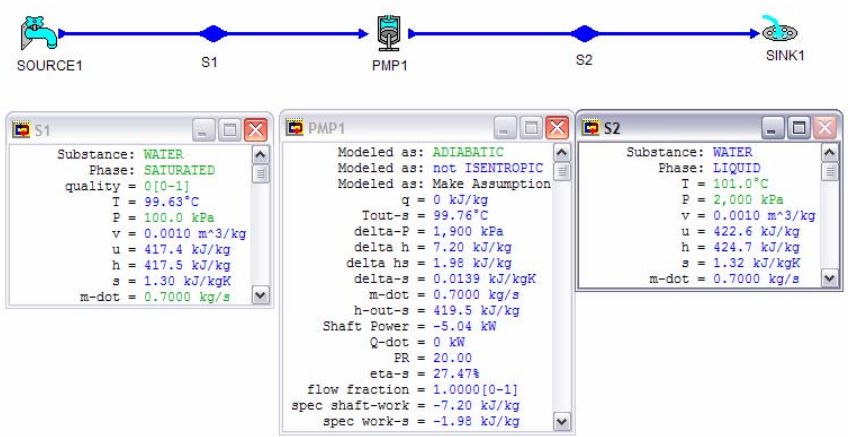

Figure E6.7.1.4. Entropy

2. Analysis
   (A) Assume the pump is adiabatic.

(B) Input the given information: (a) working fluid is water, (b) the mass rate flow, quality and pressure at the inlet of the pump are 0.7 kg/s, 0 and 100 kPa, and (c) the exit pressure and temperature of the pump are 2 Mpa and 101EC.

3. Display results

The answers are)Sdot=0.7(0.0139)=0.00973 kJ/[K(s)], Wdot=-5.04 kW.

6.7.2. Ideal Gas

The entropy change of an ideal gas during a process 1-2 are given by the following equations:

$$S_2 - S_1 = I_{process\ 1-2}\ [C_v\ (dT)]/T + I_{process\ 1-2}\ [p(dV)]/T \qquad (6.\ 7.2.1)$$

and

$$S_2 - S_1 = I_{process\ 1-2}\ [C_p\ (dT)]/T - I_{process\ 1-2}\ [V(dp)]/T \qquad (6.7.2.2\ )$$

Example 6.7.2.1.

0.25 kg of air is compressed from an initial state of 100 kPa and 19EC to a final state of 600 kPa and 60EC. Determine the heat added, work added, and the entropy change of the air during this compression process.

To solve this problem by CyclePad, we take the following steps:

1. Build
   (A) Take a begin, a compression device, and an end from the closed-system inventory shop and connect them.
   (B) Switch to analysis mode.
2. Analysis
   (A) Assume the compression is an adiabatic process.
   (B) Input the given information: (a) working fluid is air, (b) the initial air mass, pressure and temperature of the process are 0.25 kg, 100 kPa and 19EC, (c) the final pressure and temperature of the process are 600 kPa and 60EC.
3. Display results

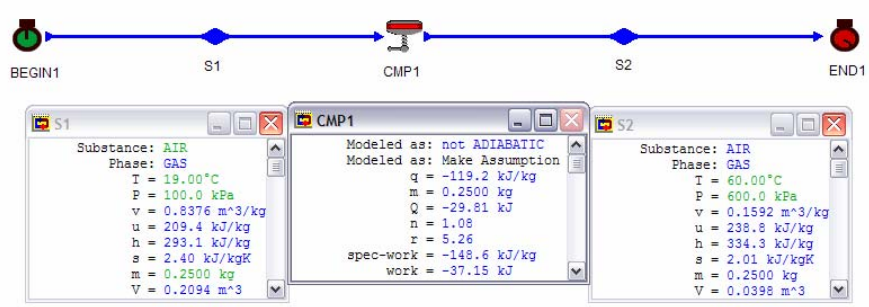

Figure E6.7.2.1. Entropy

The answers are Q=-29.81 kJ, W=-37.15 kJ and)S=0.25(2.01-2.40)=-0.0795 kJ/K.

Example 6.7.2.2.

5 ft^3/s of air is compressed in an adiabatic compressor from an initial state of 14.7 psia and 60EF to 40.5 psia and 350EF. Determine the power required, mass rate flow, and the rate of the entropy change of the air during this compression process.

To solve this problem by CyclePad, we take the following steps:

1. Build
   (A) Take a source, a compressor, and a sink from the open-system inventory shop and connect them.
   (B) Switch to analysis mode.
2. Analysis
   (A) Assume the compressor is adiabatic.
   (B) Input the given information: (a) working fluid is air, (b) the flow rate, pressure and temperature at the inlet of the compressor turbine are 5 ft^3/s, 14.7 psia and 60EF, and (c) the exit pressure and temperature of the compressor is 40.5 psia and 350EF.
3. Display results

The answers are Wdot=-37.59 hp, mdot=0.3823 lbm/s, and)Sdot=0.3823(0.0369)=0.01411 Btu/[s(ER)].

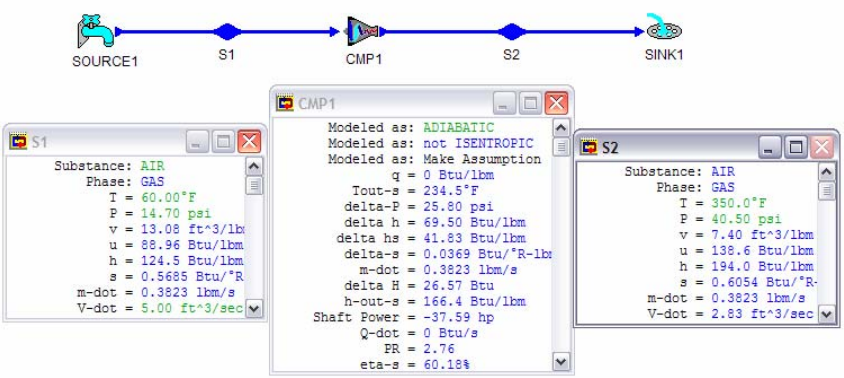

Figure E6.7.2.2. Entropy

6.7.3. Incompressible Liquid And Solid

The entropy change of an incompressible liquid or a solid during a process 1-2 are given by the following equations:

$$S_2 - S_1 = I_{process\ 1-2}\ [C(dT)]/T \qquad (6.\ 7.3.1)$$

The temperature change of an incompressible liquid or a solid during an isentropic process 1-2 is zero.

Example 6.7.3.1.

Determine the rate of entropy change and the pump power input required to an adiabatic pump for a mass flow rate of 0.7 kg/s saturated water from 100 kPa to 2 Mpa and 101EC.

To solve this problem by CyclePad, we take the following steps:

1. Build
   (A) Take a source, a pump, and a sink from the open-system inventory shop and connect them.
   (B) Switch to analysis mode.
2. Analysis
   (A) Assume the pump is adiabatic.
   (B) Input the given information: (a) working fluid is water, (b) the mass rate flow, quality and pressure at the inlet of the pump are 0.7 kg/s, 0 and 100 kPa, and (c) the exit pressure and temperature of the pump are 2 Mpa and 101EC.
3. Display results

The answers are)Sdot=0.7(0.0139)=0.00973 kJ/[K(s)], Wdot=-5.04 kW.

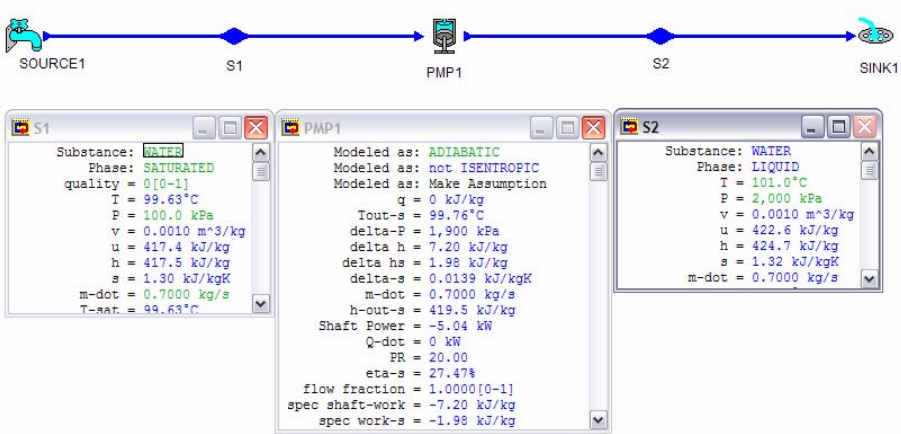

Figure E6.7.3.1. Entropy

Homework 6.7. Property Relationships

1. 2 kg/s of water at 100 kPa and 90EC are mixed with 3 kg/s of water at 100 kPa and 10EC to form 5 kg/s of water at 100 kPa in an adiabatic mixing chamber. Find the water temperature of the mixed 5 kg/s stream, and rate change of entropy due to the mixing process.
   ANSWER: 42.02EC, 0.1571 kW/K.
2. A mixing chamber has two inlets and one outlet. The following information is known:
   inlet one: liquid water at 10 Mpa, 260EC and 1.8 kg/s
   inlet two: steam in at 10 Mpa and 500EC
   outlet: saturated mixture at 10 Mpa with quality of 0.5.
   Find: the mass flow rates for inlet two and for the outlet, and the rate of entropy generation during the process.
   ANSWER: 1.28 kg/s, 3.08 kg/s, 0.2028 kW/K.
3. A rigid container holds 5 lb_m of R134a. Initially, the refrigerant is 72% vapor by mass at 70EF. Heat is added until the R134a. temperature inside the container reaches 220EF. Determine: the final pressure in the container, and total entropy change of the R134a.
   ANSWER: 159.8 psia, 1.38 Btu/EF.
4. A rigid tank contains 1.2 kg of air at 350 K and 100 kPa. Heat is added to the air until the pressure reaches 120 kPa. Find the heat added to the gas, the final temperature of the gas, the entropy generation for the air.
   ANSWER: 60.20 kJ, 420 K, 0.16 kJ/K.
5. Steam initially at 500 kPa and 553 K is contained in a cylinder fitted with a frictionless piston. The initial volume of the steam is 0.057 m^3. The steam undergoes an isothermal compression process until it reaches a specific volume of 0.3 m^3/kg. Determine the total entropy change of the steam, and the magnitude and direction of the heat transfer and work.
   ANSWER: -0.0281 kJ/[kg(K)], -15.55 kJ.
6. A piston-cylinder device contains 1.2 kg of carbon dioxide at 120 kPa and 27EC. The gas is compressed slowly in a polytropic process during which $p_1(v_1)^{1.3}=p_2(v_2)^{1.3}$=constant. The process ends when the specific volume reaches 0.3 m^3/kg. Determine (A) the final volume of the gas, (B) final temperature of the gas, (C) entropy change of the gas. Also determine (D) the work added to the gas, and (E) the heat transfer during the process.
   ANSWER: (A) 0.36 m^3, (B) 70.83EC, (C) 0, (D) -33.12 kJ, (E) 1.14 kJ.
7. A piston-cylinder device contains 3 lbm of refrigerant-22 at 120 psia and 120EF. The refrigerant is cooled at constant pressure until it exists as a compressed liquid at 90 F. If the temperature of the surroundings is 70EF, determine (A) the work added to the refrigerant and (B) heat transfer removed from the system. Also determine (C) the total entropy change of the system.
   ANSWER: (A) -2.73 Btu, (B) -15.63 kJ, (C) -0.1 Btu/EF.
8. A piston-cylinder device contains 3 lbm of refrigerant-12 at 120 psia and 120EF. The refrigerant is cooled at constant pressure until it exists as a compressed liquid at 90 F.

If the temperature of the surroundings is 70EF, determine (A) the work added to the refrigerant and (B) heat transfer removed from the system. Also determine (C) the total entropy change of the system.
ANSWER: (A) -23.79 Btu, (B) -187.3 kJ, (C) -1.0975 Btu/EF.

9. 2 kg of methane at 500 kPa and 100EC (state 1) undergoes a reversible polytropic expansion to a final (state 2) temperature and pressure of 20EC and 100 kPa. Find the work done, heat transferred, entropy change of the methane.
ANSWER: 469.4 kJ, 101.2 kJ, 0.56 kJ/K.
10. Air at 50 kPa and 400 K has 50 kJ of heat added to it in an internally-reversible isothermal process. Calculate the total entropy change of the air.
ANSWER: 0.12 kJ/K.
11. Helium at 50 kPa and 400 K has 50 kJ of heat added to it in an internally-reversible isothermal process. Calculate the total entropy change of the helium.
ANSWER: 0.13 kJ/K.
12. Helium is contained in a closed system initially at 135 kPa, 1 m^3 and 30EC and undergoes an isobaric process until the volume is doubled. Determine the mass, the final temperature and entropy change of the helium. Find the work done and heat transferred during this process.
ANSWER: 0.2144 kg, 333.1EC, 0.77 kJ/K.
13. An engineer in an industrial plant instruments a steady-flow mixing chamber and reports the following measurements: inlet steam at 200 kPa and 150EC, 1.5 kg/s; inlet water at saturated liquid, 15EC, 0.8 kg/s; exit mixture at 400 kPa and 2.3 kg/s; work added is 0; and heat transfer to environment is 0. Find the pressure of the inlet 15EC saturated liquid water, the rate of total entropy change, and the rate of entropy generation. It is known that an adiabatic mixing process is an irreversible process. Determine whether it is possible for these data to be correct.
ANSWER: 1.71 kPa, -0.2645 kW/K, impossible.
14. Another engineer in the industrial plant instruments a steady-flow mixing chamber and reports the following measurements: inlet steam at 200 kPa and 150EC, 1.5 kg/s; inlet water at saturated liquid, 15EC, 0.8 kg/s; exit mixture at 100 kPa and 2.3 kg/s; work added is 0; and heat transfer to environment is 0. Find the pressure of the inlet 15EC saturated liquid water, the rate of total entropy change, and the rate of entropy generation. It is known that an adiabatic mixing process is an irreversible process. Determine whether it is possible for these data to be correct.
ANSWER: 1.71 kPa, 0.5975 kW/K, possible.
15. Two insulated solid masses are brought into thermal contact with each other and allowed to attain mutual equilibrium. Initially the temperature of mass A is greater than the temperature of mass B. Does the entropy of mass A increase or decrease? Does the entropy of mass B increase or decrease? Does the total entropy of mass A and mass B increase or decrease?
16. Determine which of the following cases are feasible:
    (A) An adiabatic compressor where the inlet and outlet entropies are equal.
    (B) An actual adiabatic pump where the inlet and outlet entropies are equal.
    (C) the entropy of steam decreases when it passes through an adiabatic turbine.
    (D) An adiabatic heat exchanger where the entropy of the cooling fluid decreases.

(E) A heat engine that operates in a cycle and interacts with one reservoir only.
(F) Steam passing through a throttling valve undergoes no enthalpy change.
(G) Steam passing through a throttling valve undergoes no entropy change.
(H) An isothermal process in a system the entropy of which decreases.
(I) An adiabatic process in a system the entropy of which decreases.

17. Steam at 2 Mpa and 600 K is throttled through a valve to a pressure of 1 Mpa in a steady flow process. Determine the entropy production for this process.
18. Steam at 200 psia and 600 R is throttled through a valve to a pressure of 100 psia in a steady flow process. Determine the temperature of the steam after the valve, and entropy production for this process.

6.8. ISENTROPIC PROCESSES

An isentropic process is a constant entropy process. A constant entropy process implies a reversible and adiabatic process. Notice that an isentropic process is always adiabatic, but an adiabatic process is not always isentropic. Since heat transfer in practice requires some time, a very rapid reversible process may be treated as isentropic, although it would not be quasi-static.

An isentropic process is an idealization. Since there is always some internal and external irreversibilities and a heat transfer with any temperature difference between a system and its surroundings in actual processes. However, such idealization is of immense use in the analyses of theoretical processes and cycles for power generation, heat pump, and refrigeration.

Example 6.8.1.

1 m^3 of air is compressed in an isentropic process from an initial state of 300 K, and 101 kPa to a final temperature of 870 K. Determine the pressure and specific volume of the air at the final state, and the work required.

To solve this problem by CyclePad, we take the following steps:

1. Build
   (A) Take a begin, a compression device, and an end from the closed-system inventory shop and connect them.
   (B) Switch to analysis mode.
2. Analysis
   (A) Assume the compression is an isentropic process.
   (B) Input the given information: (a) working fluid is air, (b) the initial air volume, pressure and temperature of the process are 1 m^3, 101 kPa and 300 K, (c) the final temperature of the process is 870 K.
3. Display results

The answers is V=0.0595 m^3/kg, T=4195 kPa, and W=-479.8 kJ.

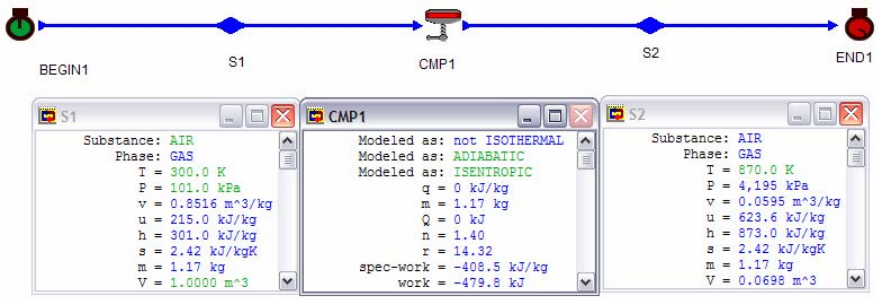

Figure E6.8.1. Entropy

Example 6.8.2.

Steam at 1.5 Mpa and 400EC enters an adiabatic turbine and exhausts at 20 kPa. The mass rate flow of the steam is 0.24 kg/s. Determine the maximum power produced, exhaust temperature and quality of the steam at the maximum power condition.

To solve this problem by CyclePad, we take the following steps:

1. Build
   (A) Take a source, a turbine, and a sink from the open-system inventory shop and connect them.
   (B) Switch to analysis mode.
2. Analysis
   (A) Assume the turbine is adiabatic and isentropic.
   (B) Input the given information: (a) working fluid is steam, (b) the pressure and temperature at the inlet of the turbine are 1.5 Mpa and 400EC,(c) the exit pressure of the turbine is 20 kPa, and (d) the mass rate flow of the steam is 0.24 kg/s.
3. Display results

The answers are Wdot=204.1 kW, T=60.07EC and x=0.9136.

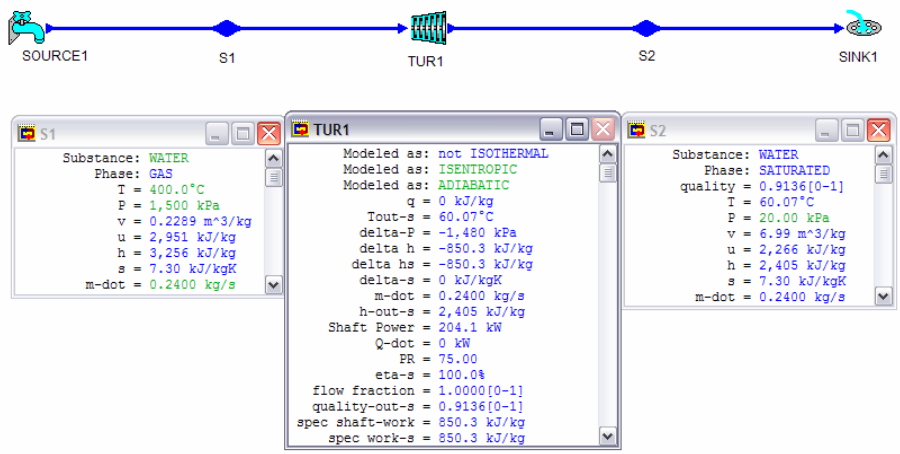

Figure E6.8.2. Entropy

Homework 6.8. Isentropic Processes

1. Indicate whether the following statements are true or false for an isentropic process:
   (A) Q=0.
   (B) W=0.
   (C) The entropy change of the system is always zero.
   (D) The total entropy change of the system and the surroundings is always zero.
   (E) The temperature of the system does not change.
2. Indicate whether the following statements are true or false for an isothermal process:
   (A) Q=T()S).
   (B))U=0.
   (C) The entropy change of the system is always zero.
   (D) The total entropy change of the system and the surroundings is always zero.
   (E) The entropy change of the surroundings is negative.
   (F) Q=W.
3. Indicate whether the following statements are true or false for a reversible process:
   (A) Q=0.
   (B) Work may be calculated using the equation of state.
   (C) The total entropy change of the system and the surroundings is zero.
4. Air undergoes a change of state isentropically from (1500ER and 75 psia) to 16.5 psia. (A) Sketch the process on a T-s diagram. (B) Determine the temperature of the air at the final state. (C) Determine the entropy change due to change of state. (D) Determine the heat added and work added to the air. And (E) Determine the specific volume of air at the final state.
   ANSWER: (B) 973.2ER, (C) 0, (D) 0, 90.18 Btu, (E) 21.82 ft^3/lbm.
5. Air is compressed in a piston-cylinder device from 100 kPa and 17EC to 800 kPa in an isentropic process. Determine the final temperature and the work added per unit mass during this process.

ANSWER: 252.4EC, -168.7 kJ/kg.

6. 15 kg/s of steam enters an isentropic steam turbine steadily at 15 Mpa and 600EC and leaves at 10 kPa. Find the temperature and quality of the steam at exit, specific entropy change of the steam, and the shaft power produced by the turbine.
   ANSWER: 45.82EC, 0.8038, 0, 22006 kW.
7. 15 kg/s of steam enters an adiabatic steam turbine with 87% efficiency steadily at 15 Mpa and 600EC and leaves at 10 kPa. Find the temperature and quality of the steam at exit, specific entropy change of the steam, and the shaft power produced by the turbine.
   ANSWER: 45.82EC, 0.8835, 0.5979 kJ/[kg(K)], 19145 kW.
8. Water at 20 kPa and 38EC enters an isentropic pump and leaves at 16 Mpa. The water flow rate through the pump is 15 kg/s. Determine the temperature of the water at the exit, specific entropy change of the water, and the power required to drive the pump.
   ANSWER: 38.45EC, 0, -240.4 kW.
9. Water at 20 kPa and 38EC enters an adiabatic pump and leaves at 16 Mpa. The water flow rate through the pump is 15 kg/s. The adiabatic efficiency of the pump is 85%. Determine the temperature of the water at the exit, specific entropy change of the water, and the power required to drive the pump.
   ANSWER: 39.13EC, 0.0091kJ/[kg(K)], -282.8 kW.
10. 0.2 kg/s of air (combustion gas) enters an isentropic gas turbine at 1200 K, 800kPa, and leaves at 400 kPa. Determine the temperature of the air at the exit, specific entropy change of the the air, and the power output of the turbine.
    ANSWER: 984.4 K, 0, 43.27 kW.
11. Steam enters a turbine at 3 Mpa and 450EC, expands in a reversible adiabatic process, and exhausts at 10 kPa. The power output of the turbine is 800 kW. What is the mass flow rate of steam through the turbine?
    ANSWER: 0.7332 kg/s.
12. Steam enters a turbine at 3 Mpa and 400EC, expands in a reversible adiabatic process, and exhausts at 10 kPa. The power output of the turbine is 800 kW. What is the mass flow rate of steam through the turbine?
    ANSWER: 0.7771 kg/s.
13. Steam at 0.4 Mpa and 433 K contained in a cylinder and piston device is expanded isentropically to 0.3 Mpa. Find the final temperature of the steam.
    ANSWER: 406.7 K.
14. Air at 0.4 Mpa and 433 K contained in a cylinder and piston device is expanded isentropically to 0.3 Mpa. Find the final temperature of the steam.
    ANSWER: 398.8 K.

6.9. ISENTROPIC EFFICIENCY

The *isentropic efficiency* is used to compare the actual adiabatic process to the isentropic process for many devices. The reduction of the irreversibilities of a device process is desired to increase the efficiency of the process. Therefore the device isentropic efficiency is the ratio

of the actual adiabatic performance to the isentropic performance. The isentropic device is taken as the standard comparison of actual adiabatic operation.

6.9.1. Turbine Isentropic Efficiency

The isentropic efficiency ($0_{turbine}$) of a turbine is a comparison of the work produced by an actual adiabatic turbine (w_a) with the work produced by an isentropic turbine (w_s). It is defined as the actual work output divided by the work for a hypothetical isentropic expansion from the same inlet state to the same exit pressure as:

$$0_{turbine} = w_a/w_s \tag{6.9.1.1}$$

The inlet to the turbine is at a specified state, and the exit is at a specified pressure.

The isentropic efficiency provides a rating or measure of the real process in terms of the actual change of state and is a convenient way of using the concept of entropy.

Example 6.9.1.1.

An adiabatic turbine is designed to produce 10 Mw. It receives steam at 1 Mpa and 300EC and leaves the turbine at 15 kPa. Determine the minimum steam mass rate of flow required, the exit temperature and quality of steam.

To solve this problem by CyclePad, we take the following steps:

1. Build
   (A) Take a source, a turbine, and a sink from the open-system inventory shop and connect them.
   (B) Switch to analysis mode.
2. Analysis
   (A) Assume the turbine is adiabatic and isentropic.
   (B) Input the given information: (a) working fluid is steam, (b) the mass rate flow, pressure and temperature at the inlet of the turbine are 2 kg/s, 1 Mpa and 300EC, (c) the outlet pressure of the turbine is 15 kPa, and (d) the power output of the turbine is 1,000 kW.
3. Display results

The answers are mdot=13.48 kg/s, T=53.98EC and x=0.8780.

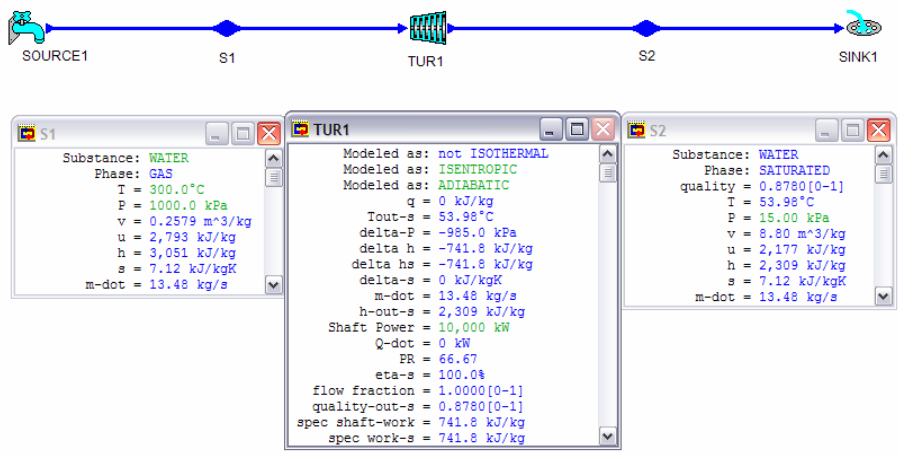

Figure E6.9.1. Turbine efficiency

Example 6.9.1.2.

Air enters an adiabatic turbine with a mass flow rate of 0.5 kg/s at 1000 kPa and 1300EC and leaves the turbine at 100 kPa. The turbine efficiency is 88%. Determine the temperature at the exit and the power output of the turbine.

To solve this problem by CyclePad, we take the following steps:

1. Build
   (A) Take a source, a turbine, and a sink from the open-system inventory shop and connect them.
   (B) Switch to analysis mode.
2. Analysis
   (A) Assume the turbine is adiabatic.
   (B) Input the given information: (a) working fluid is air, (b) the mass rate flow, pressure and temperature at the inlet of the turbine are 0.5 kg/s, 1000 kPa and 1300EC, (c) the outlet pressure of the turbine is 100 kPa, and (d) the efficiency of the turbine is 0.88.
3. Display results

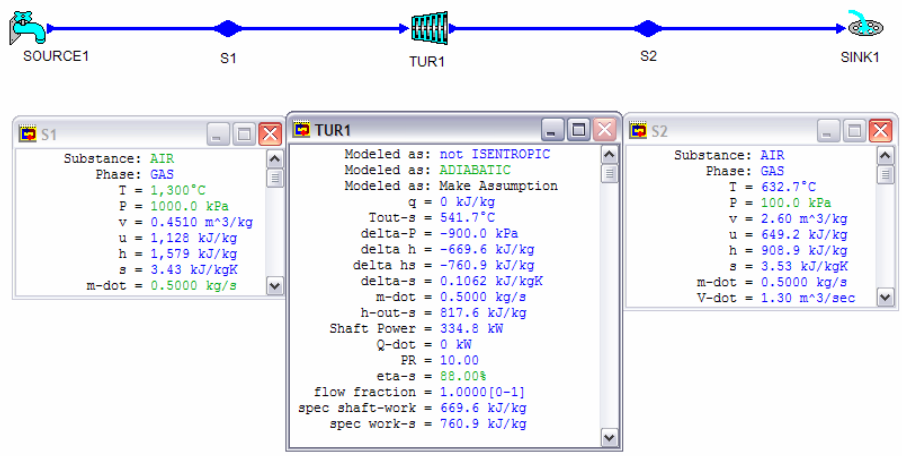

Figure E6.9.1.2. Turbine efficiency

The answers are T=632.7EC, Wdot=334.8 kW.

Example 6.9.1.3.

A two-stage adiabatic steam turbine receives 10 kg/s of steam at 4000 kPa and 400EC. At the point in the turbine where the pressure is 1000 kPa, steam is bled off for process heating at the rate of 2 kg/s. The temperature of this steam is measured at 300EC. The balance of the steam leaves the turbine at 20 kPa. The quality of the steam leaves the turbine is measured at 90%. Determine the power produced by the actual turbine, the maximum possible power produced by the turbine, and isentropic efficiency of the turbine.

To solve this problem by CyclePad, we take the following steps:

1. Build
   (A) Take a source, a splitter, two turbines, and two sinks from the open-system inventory shop and connect them.
   (B) Switch to analysis mode.
2. Adiabatic turbine analysis
   (A) Assume the turbines are adiabatic.
   (B) Input the given information: (a) working fluid is steam, (b) the mass rate flow, pressure and temperature at the inlet of the turbine are 10 kg/s, 4 Mpa and 400EC, (c) the outlet pressure and temperature at the first-stage turbine are 1000 kPa and 300EC, and (d) the outlet mass flow rate, pressure and quality at the second-stage turbine are 8 kg/s, 20 kPa and 90%.
   (C) Display result: The answer is net-power=7048 kW for the actual two-stage adiabatic turbine.
3. Isentropic turbine analysis

(A) (a) retract the outlet temperature at the first-stage turbine, and retract the outlet quality at the second-stage turbine, (b) input the efficiency of the first-stage turbine 100%, and input the efficiency of the second-stage turbine 100%.

(B) Display the turbine result. The answer is net-power=8569 kW for the isentropic two-stage adiabatic turbine.

4. The isentropic efficiency of the two-stage turbine is 7048/8569=82.25%.

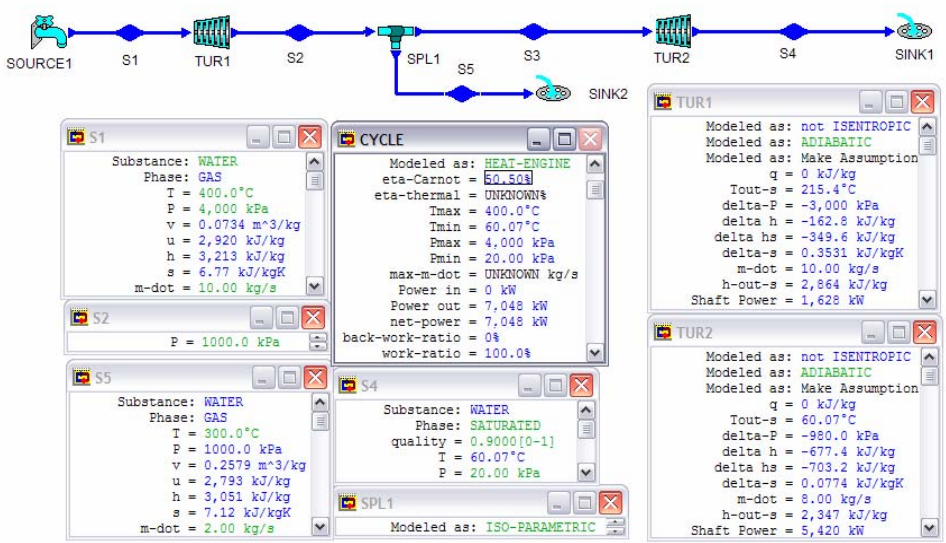

Figure E6.9.1.3. Isentropic efficiency of a multi-stage turbine

6.9.2. Compressor Isentropic Efficiency

The isentropic efficiency ($0_{compressor}$) of a compressor is a comparison of the work required by an actual adiabatic compressor (w_a) with the work required by an isentropic turbine (w_s).

$$0_{compressor} = w_s/w_a \tag{6.9.2.1}$$

The inlet to the compressor is at a specified state, and the exit is at a specified pressure.

Example 6.9.2.1.

0.1 kg/s of air enters an adiabatic compressor at 100 kPa and 20EC and leaves the compressor at 800 kPa. The compressor efficiency is 87%. Determine the air exit temperature and the power required for the compressor.

To solve this problem by CyclePad, we take the following steps:

1. Build

(A) Take a source, a compressor, and a sink from the open-system inventory shop and connect them.
(B) Switch to analysis mode.

2. Analysis
   (A) Assume the compressor is adiabatic.
   (B) Input the given information: (a) working fluid is air, (b) the mass rate flow, pressure and temperature at the inlet of the compressor turbine are 0.1 kg/s, 100 kPa and 20EC, (c) the outlet pressure of the compressor is 800 kPa, and (d) the efficiency of the compressor turbine is 0.87.
3. Display results

The answers are Wdot=-27.44 kW and T=293.4EC.

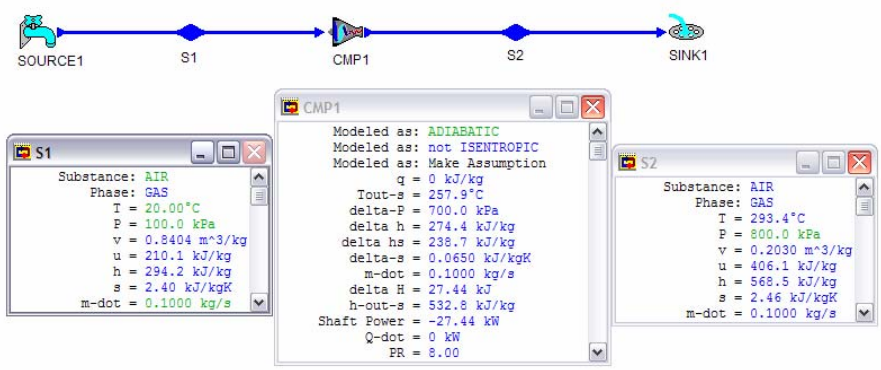

Figure E6.9.2.1. Compressor efficiency

Example 6.9.2.2.

0.01 kg/s of refrigerant R-12 enters an adiabatic compressor at 125 kPa and -10EC and leaves the compressor at 1.2 Mpa and 100EC. Determine the compressor efficiency and the power required for the compressor.

To solve this problem by CyclePad, we take the following steps:

1. Build
   (A) Take a source, a compressor, and a sink from the open-system inventory shop and connect them.
   (B) Switch to analysis mode.
2. Analysis
   (A) Assume the compressor is adiabatic.
   (B) Input the given information: (a) working fluid is R-12, (b) the mass rate flow, pressure and temperature at the inlet of the compressor turbine are 0.01 kg/s, 125 kPa and -10EC, and (c) the exit pressure and temperature of the compressor are 1.2 Mpa and 100EC.
3. Display results

The answers are Wdot=-0.6036 kW and 0=72.58 %.

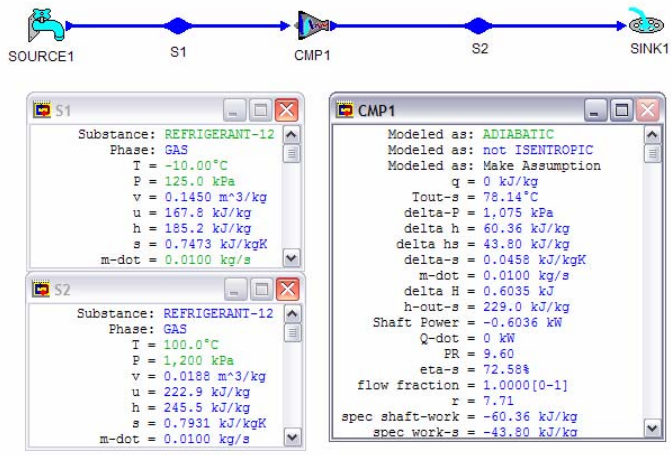

Figure E6.9.2.2. Compressor efficiency

6.9.3. Pump Isentropic Efficiency

The isentropic efficiency (0_{pump}) of a pump is a comparison of the work required by an actual adiabatic pump (w_a) with the work required by an isentropic pump (w_s).

$$0_{pump} = w_s/w_a \tag{6.9.3.1}$$

Example 6.9.3.1.

0.4 kg/s of saturated liquid water enters an adiabatic pump at 10 kPa and leaves the pump at 4 MPa. The pump efficiency is 83%. Determine the pump power required.

To solve this problem by CyclePad, we take the following steps:

1. Build
   (A) Take a source, a pump, and a sink from the open-system inventory shop and connect them.
   (B) Switch to analysis mode.
2. Analysis
   (A) Assume the pump is adiabatic.
   (B) Input the given information: (a) working fluid is water, (b) the mass rate flow and pressure at the inlet of the pump are 0.4 kg/s and 10 kPa, (c) the outlet pressure of the pump is 4 MPa, and (d) the efficiency of the pump compressor turbine is 0.83.
3. Display results

The answers is Wdot=-1.96 kW.

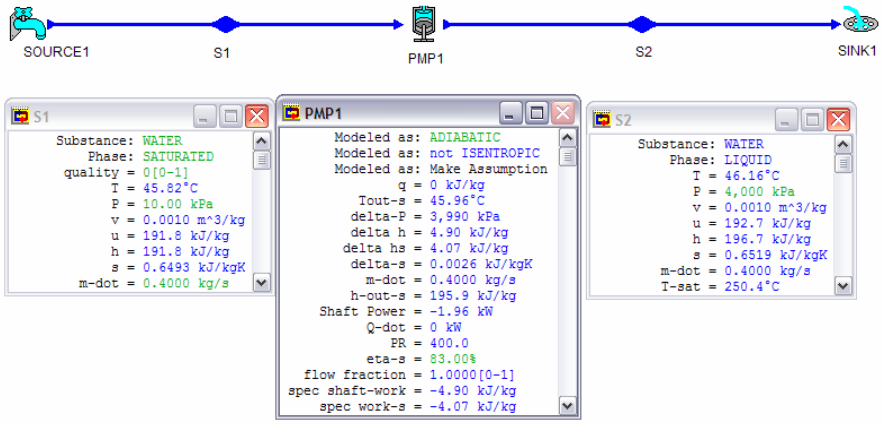

Figure E6.9.3.1. Pump efficiency

Homework 6.9. Isentropic Efficiency

1. Helium enters a steady-flow, adiabatic turbine at 1300 K and 2 Mpa and exhausts at 350 kPa. The turbine produces 1200 kW of power when the mass flow rate of helium is 0.4 kg/s. Determine the exit temperature of the helium, the specific entropy change of the helium and the efficiency of the turbine.
   ANSWER: 720.5 K, 0.5648 kJ/[kg(K)], 88.61%.
2. Steam is expanded from (1000 psia, 1000EF) in an adiabatic turbine to 1 psia. The efficiency of the turbine is 90 %. Determine the actual specific work done by the turbine, the mass flow rate required to produce an output of 100 MW, the specific entropy generated by this process, and the exhaust steam quality.
   ANSWER: 523.8 Btu/lbm, 180.9 lbm/h, 0.1037 Btu/[lbm(EF)], 0.8809.
3. Steam enters an adiabatic turbine at 1000 psia and 900EF with a mass flow rate of 60 lbm/s and leaves at 5 psia. The adiabatic efficiency of the turbine is 90%. Determine the temperature of the steam at the turbine exit and the power output of the turbine in MW.
   ANSWER: 162.2EF, 26.26 MW.
4. 0.23 kg/s of combustion air enters an adiabatic gas turbine with 86 % efficiency at 1200 K, 800 kPa, and leaves at 400 kPa. Determine the power output of the turbine, and the entropy change of the air.
   ANSWER: 31.14 kW, 0.0303 kJ/[kg(K)].
5. Steam enters an adiabatic turbine at 1250 psia and 800EF and leaves at 5 psia with a quality of 90 %. Determine the mass flow rate required for a shaft power output of 1 MW.
   ANSWER: 2.75 lbm/s.
6. Combustion gases enter an adiabatic gas turbine at 1440EF and 120 psia and leaves at 68.5 psia. The power output from the turbine is 85 hp. Find the isentropic efficiency of the turbine if the in-line compressor has a mass flow rate of 60 lbm/min, and the entropy change across the turbine (Btu/lbm-ER).

ANSWER: 89.15%, 0.0045 Btu/[lbm(EF)].

7. Combustion gases enter an adiabatic gas turbine at 1440EF and 120 psia and leaves at 68.5 psia. The turbine has an isentropic efficiency of 85%.
   Find the 'actual' power output of the turbine (horsepower) if the in-line compressor has a mass flow rate of 60 lbm/min, and (b) Find the entropy change across the turbine (Btu/lbm-ER).
   ANSWER: 81.04%, 0.0062 Btu/[lbm(EF)].
8. Air at 800 kPa and 1200 K enters an actual adiabatic turbine at steady state. Pressure at 300.1 kPa is measured at the exit of the turbine. The turbine is known to have an isentropic efficiency of 85%. determine the actual temperature at the exit of the turbine, the work output of the turbine in kJ/kg, and the specific entropy generated by the turbine in kJ/[kg(K)].
   ANSWER: 950.8 K, 250.1 kJ/kg, 0.05 kJ/[kg(K)].
9. Determine the minimum power input required to drive a steady-flow, adiabatic air compressor that compresses 2 kg/s of air from 105 kPa and 23EC to a pressure of 300 kPa.
   ANSWER: -207.9 kW.
10. A steady-flow, isentropic air compressor that compresses air at a rate of 6 kg/s from an inlet state of 100 kPa and 310 K to a discharge pressure of 350 kPa. Find the power required to drive the compressor.
    ANSWER: -803.2 kW.
11. An inventor claims that a steady-flow, adiabatic air compressor that compresses air at a rate of 6 kg/s from an inlet state of 100 kPa and 310 K to a discharge pressure of 350 kPa with a power input of 785 kW has been developed. Evaluate his claim.
    ANSWER: impossible.
12. Refrigerant-12 enters an adiabatic compressor as saturated vapor at 20 psia at a rate of 4 ft^3/s and exits at 100 psia pressure. If the adiabatic efficiency of the compressor is 80%, determine (a) the temperature of the refrigerant at the exit of the compressor and (b) the power input, in hp.
    ANSWER: 117.4EF, -45.3 hp.
13. Refrigerant R134a enters an actual adiabatic compressor at 140 kPa and -10EC and exits at 1.4 Mpa and 80EC. Find the efficiency of the compressor, the actual work reqired by the compressor, and the entropy generation.
    ANSWER: 80.9%, -62.8 kJ/kg, 0.0347 kJ/[kg(K)].
14. Refrigerant-12 enters an adiabatic compressor with 80 % efficiency as saturated vapor at 120 kPa at a rate of 0.3 m^3/s and exits at 1 Mpa pressure. Determine the temperature of the refrigerant at the exit of the compressor, the power input in kW, and the entropy change of the refrigerant.
    ANSWER: 67.24EC, -104.7 kW, 0.0282 kJ/[kg(K)].
15. 10 lbm/s of air is compressed through a compresser adiabatically from (15 psia and 70EF) to (60 psia and 350EF). Determine the work input required to the compressor, the efficiency of the compressor, and the entropy change of the process.
    ANSWER: -67.11 kJ/kg, 91.93%, 0.0068 kJ/[kg(K)].
16. Saturated liquid water enters an adiabatic pump at 100 kPa pressure at a rate of 5 kg/s and exits at 10 Mpa. Determine the minimum power required to drive the pump.

ANSWER: -51.51 kW.

17. Saturated liquid water enters an adiabatic pump at 100 kPa pressure at a rate of 5 kg/s and exits at 10 Mpa. Determine the power required to drive the pump if the pump efficiency is 80% and 85%.
    ANSWER: -64.39 kW, -60.60 kW.
18. In a water pump, 13.9 lbm/s are raised from atmospheric pressure (14.7 psia) and 520ER to 100 psia. The isentropic pump efficiency is 80 percent. Determine the horsepower input to the pump.
    ANSWER: -6.21 hp.
19. 1.23 lbm/s of steam is expanded from (1000 psia, 1000EF) in a two-stage adiabatic turbine to 1 psia. The efficiency of the high-pressure stage turbine is 90 %. The efficiency of the low-pressure stage turbine is 85 %. The exit pressure of the high-pressure stage turbine is 300 psia. Determine (A) the actual power produced by the high-pressure stage turbine and the low-pressure stage turbine, (B) the specific entropy generated by the high-pressure stage and by the low-pressure stage turbine, (C) the steam temperature at the exit of the high-pressure stage turbine and the low-pressure stage turbine, and (D) the exhaust steam quality.
    ANSWER: (A) 254.7 hp, 632.4 hp, (B) 0.0144 Btu/[lbm(EF)], 0.1142 Btu/[lbm(EF)], (C) 683.8EF, 101.7EF, (D) 0.8945.
20. A steady-flow, two-stage air adiabatic compressor that compresses air at a rate of 6 kg/s from an inlet state of 100 kPa and 310 K to a low-pressure stage discharge pressure of 250 kPa, and to a high-pressure stage discharge pressure of 750 kPa. The efficiency of the high-pressure stage compressor is 90 %. The efficiency of the low-pressure stage compressor is 85 %. Determine (A) the actual power required by the high-pressure stage compressor and by the low-pressure stage compressor, (B) the specific entropy generated by the high-pressure stage compressor and by the low-pressure stage compressor, and (C) the air temperature at the exit of the low-pressure stage compressor, and at the exit of the high-pressure stage compressor.
    ANSWER: (A) -1034 kW, -657.1 kW, (B) 0.0296 kJ/[kg(K)], 0.04 kJ/[kg(K)], (C) 419.1 K, 590.0 K.
21. Steam enters an adiabatic turbine with a mass flow rate of 1.5 lbm/s at 1000 psia and 600EF and leaves at 7 psia. Determine the shaft power output and efficiency of turbine.
    ANSWER: 445.6 hp, 60.47%.
22. Steam enters an adiabatic turbine at 800 psia and 600EF and leaves at 3 psia. Determine the mass flow rate required for a shaft power output of 500 hp, and quality of the steam at exit state. The turbine efficiency is 78%.
    ANSWER: 1.17 lbm/s, 0.8469.
23. Steam enters an adiabatic turbine with a mass flow rate of 1.2 lbm/s at 800 psia and 600EF and leaves at 7 psia. Determine the shaft power output and the quality of steam at exit section. The turbine efficiency is 80%.
    ANSWER: 466.6 hp, 0.8572.
24. Steam at 8 kg/s, 800 kPa and 450EC enters an adiabatic turbine and leaves the turbine at 1 bar. Find the power produced by the turbine if the turbine efficiency is:
    (A) 90%.

(B) 85%.
(C) 80%.
ANSWER: (A) 3953 kW, (B) 3733 kW, (C) 3513 kW.

25. Steam at 1.5 lbm/s, 100 psia and 800EF enters an adiabatic turbine and leaves the turbine at 14.8 psia. Find the power produced by the turbine if the turbine efficiency is:
(A) 100%.
(B) 90%.
(C) 85%.
(D) 80%.
ANSWER: (A) 454.0 hp, (B) 408.6 hp, (C) 385.9 hp, (D) 363.2 hp.

26. A pump with an isentropic efficiency of 0.8 pumps water at 0.1 Mpa and 298 K and discharge it at 5 Mpa. Find the entropy change and enthalpy change of the water upon passing through the pump.
ANSWER: 0.0041 kJ/[kg(K)] and 6.13 kJ/kg.

27. A pump with an isentropic efficiency of 0.85 pumps water at 0.1 Mpa and 298 K and discharge it at 5 Mpa. Find the entropy change and enthalpy change of the water upon passing through the pump.
ANSWER: 0.0029 kJ/[kg(K)] and 5.77 kJ/kg.

28. 0.2 kg/s of air (combustion gas) enters an adiabatic gas turbine at 1200 K, 800kPa, and leaves at 400 kPa. The gas turbine has an adiabatic efficiency of 86%. Determine the temperature of the air at the exit, specific entropy change of the the air, and the power output of the turbine.
ANSWER: 1015, 0.0303 kJ/[kg(K)], 37.21 kW.

29. Steam enters a turbine at 3 Mpa and 450EC, expands in an adiabatic process, and exhausts at 10 kPa. The power output of the turbine is 800 kW. The turbine efficiency is 85%. What is the mass flow rate of steam through the turbine?
ANSWER: 0.8625 kg/s.

30. A certain industrial process requires a steady supply of saturated vapor steam at 200 kPa, at a rate of 0.5 kg/s. Also required is a steady supply of compressed air at 500 kPa, at a rate of 0.1 kg/s. Both are to be supplied by an adiabatic steam turbine and an air adiabatic compressor. Steam is expanded in the turbine to supply the power needed to drive the air compressor, and the exhaust steam exits the turbine at the desired state. Air into the compressor is at the ambient condition, 100 kPa and 20EC. Given the steam inlet pressure at 1 Mpa, Find the inlet steam temperature.
ANSWER: 301.4EC.

31. A certain industrial process requires a steady supply of saturated vapor steam at 200 kPa, at a rate of 0.5 kg/s. Also required is a steady supply of compressed air at 500 kPa, at a rate of 0.1 kg/s. Both are to be supplied by an adiabatic steam turbine and an air adiabatic compressor. Steam is expanded in the turbine to supply the power needed to drive the air compressor, and the exhaust steam exits the turbine at the desired state. Air into the compressor is at the ambient condition, 100 kPa and 20EC. Given the steam inlet pressure at 2 Mpa, Find the inlet steam temperature.
ANSWER: 313.4EC.

32. A certain industrial process requires a steady supply of saturated vapor steam at 200 kPa, at a rate of 0.5 kg/s. Also required is a steady supply of compressed air at 500 kPa, at a rate of 0.1 kg/s. Both are to be supplied by an adiabatic steam turbine and an air adiabatic compressor. Steam is expanded in the turbine to supply the power needed to drive the air compressor, and the exhaust steam exits the turbine at the desired state. Air into the compressor is at the ambient condition, 100 kPa and 20EC. Given the steam inlet pressure at 1 Mpa and inlet steam temperature at 300EC, find the power required by the compressor and the efficiency of the compressor.
    ANSWER: -158.1 kW, 10.86%.
33. If liquid water at 290 K is pumped from a pressure of 100 kPa to a pressure of 5000 kPa in a pump that operates adiabatically, what is the minimum work required? If the pump efficiency is 80%, what is the actual work required?
34. A steam turbine operates adiabatically and produces 400 hp. Steam enters the turbine at 300 psia and 900 R. Exhaust steam from the turbine is saturated at 10 psia. What is the steam rate in lbm/hr through the turbine? What is the efficiency of the turbine compared with isentropic operation?
35. Saturated steam at 20 psia is to be compressed adiabatically in a compressor to 100 psia at the rate of 5 lbm/s. The efficiency of the compressor is 75%. What is the horsepower requirement of the compressor and what is the exit temperature of the steam?

6.10. ENTROPY CHANGE OF IRREVERSIBLE PROCESSES

Entropy can be generated by irreversibility factors such as friction, heat transfer, mixing, free expansion, combustion, etc. The following example illustrates the entropy generation due to these effects using CyclePad.

Example 6.10.1.

A 0.5 m^3 rigid tank contains 0.87 kg of air at 200 kPa. Heat is added to the tank until the pressure in the tank rises to 300 kPa. Determine the entropy change of air and heat added to the tank during this process.

To solve this problem by CyclePad, we take the following steps:

1. Build
   (A) Take a begin, a heater, and an end from the closed-system inventory shop and connect them.
   (B) Switch to analysis mode.
2. Analysis
   (A) Assume the heater as a isochoric process, and work=0.
   (B) Input the given information: (a) working fluid is air, (b) the initial air mass, volume and pressure of the process are 0.87 kg , 0.5 m^3 and 200 kPa, and (c) the final air pressure of the process is 300 kPa .
3. Display results

The answers is Q=125.0 kJ and)S=0.87(2.81-2.51)=0.261 kJ/K.

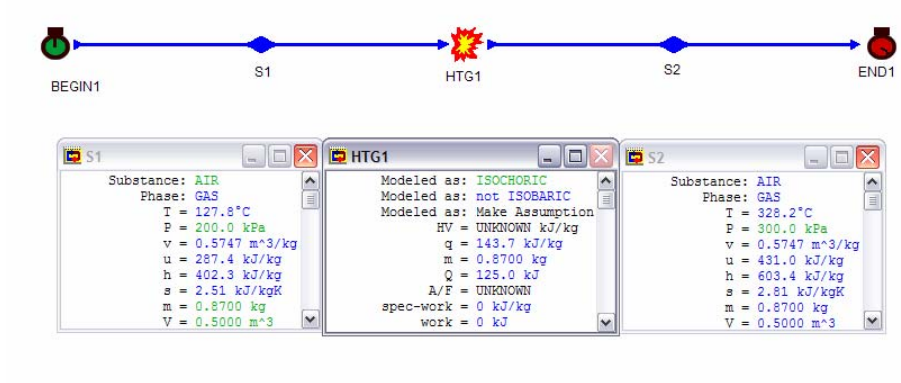

Figure E6.10.1. Entropy change of an isochoric process

Example 6.10.2.

Steam at 4 MPa and 450EC is throttled in a valve to a pressure of 2 MPa during a steady flow process. Determine the specific entropy generated during this process.

To solve this problem by CyclePad, we take the following steps:

1. Build
   (A) Take a source, a throttling valve, and a sink from the open-system inventory shop and connect them.
   (B) Switch to analysis mode.
2. Analysis
   (A) Input the given information: (a) working fluid is water, (b) the inlet temperature and pressure of the throttling valve are 450EC and 4 MPa, (c) the outlet pressure of the throttling valve is 2 MPa.
3. Display results

The answer is)s=0.3102 kJ/K(kg).

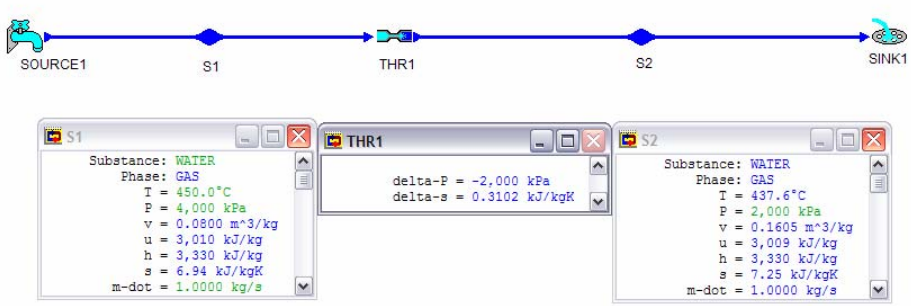

Figure E6.10.2. Entropy change of throttling process

Homework 6.10. Entropy Change of Irreversible Processes

1. A stream of hot air at a mass flow rate of 1 kg/s, 200 kPa and 673 K is mixed with a stream of cold air a mass flow rate of 1 kg/s, 200 kPa and 273 K in anadiabatic mixing chamber. Find the exiting air mass flow rate and entropy change of the air. Is this process a reversible or irreversible process?
   ANSWER: 2 kg/s,)sdot=0.1976 kJ/[kg(K)].
2. In an adiabatic mixing chamber, two streams of steam are coming in and one stream of steam is going out. The mass flow rate and properties of the coming in streams are: $mdot_1$=0.2 kg/s, p_1=500 kPa, T_1=500 K; $mdot_2$=0.1 kg/s, p_1=500 kPa, T_2=400 K. The mass flow rate and properties of the going out stream are: $mdot_3$=0.3 kg/s and p_3=500 kPa,. The conditions of the streams and inside the control volume do not change with time. Determine the temperature of the going out stream.
   ANSWER: 425 K.
3. In an adiabatic mixing chamber, two streams of air are coming in and one stream of air is going out. The mass flow rate and properties of the coming in streams are: $mdot_1$=0.2 kg/s, p_1=500 kPa, T_1=500 K; $mdot_2$=0.1 kg/s, p_1=500 kPa, T_2=400 K. The mass flow rate and properties of the going out stream are: $mdot_3$=0.3 kg/s and p_3=500 kPa,. The conditions of the streams and inside the control volume do not change with time. Determine the temperature of the going out stream.
   ANSWER: 466.7 K.
4. An ejector uses steam at 3 Mpa and 673 K at a mass flow rate of 3 kg/s, and water of 70 kPa and 313 K at a mass flow rate of 1 kg/s. The total mixture comes out at 110 kPa. Assume no heat transfer and steady flow steady state. Find the temperature of the exiting stream.
   ANSWER: 375.5 K.
5. In a food processing plant, steam at 8 kg/s, 10 bar and 700 K enters an adiabatic turbine and leaves the turbine at 1 bar and enters a food dryer (cooler for steam) where it supplies heat. The steam exhausts as a saturated liquid at 1 bar. Find the power produced by the turbine and the rate of heat added to the dryer if the turbine efficiency is (A) 90%, (B) 90%, and (C) 90%.
   ANSWER: (A) 4118 kW, -19111 kW; (B) 3889 kW, -19339 kW; (A) 3660 kW, -19568 kW.
6. An adiabatic mixing chamber receives 5 kg/s of ammonia as saturated liquid at -20EC from one line and ammonia at 40EC and 250 kPa from another line through a valve. This should produce saturated ammonia vapor at -20EC in the exit line. What is the mass flow rate in the second line, and what is the rate of entropy generation in the process?
   ANSWER: 49.72 kg/s, 9.14 kW/K.
7. An adiabatic mixing chamber receives 2 kg/s of ammonia as saturated liquid at -20EC from one line and ammonia at 40EC and 250 kPa from another line through a valve. This should produce saturated ammonia vapor at -20EC in the exit line. What is the mass flow rate in the second line, and what is the rate of entropy generation in the process?
   ANSWER: 19.89 kg/s, 3.66 kW/K.

6.11. THE INCREASE OF ENTROPY PRINCIPLE

Entropy provides a means of determining whether a process can occur or not. The application of entropy is based on the *increase of entropy principle*. The principle states that the entropy change of an isolated system with respect of time is always non-negative. An isolated system is defined as a system with neither mass nor energy interaction with its surroundings. Thus, the principle means that changes of state in an isolated system can occur only in the direction of increasing entropy. This also implies that an isolated system will have attained equilibrium only when its entropy attained the maximum value.

Since a system and its surroundings include everything which is affected by a process, the combination of the system and its surroundings is called universe. The universe is an isolated system, because the surroundings of the universe is a null system, which does not have anything in it. Therefore, we conclude that the entropy change of the universe with respect of time is always non-negative until it reaches its equilibrium state. At its equilibrium state, the entropy value of the universe would attained its maximum value and there would not be any non-equilibrium activity occurs within the universe.

Homework 6.11. The Increase of Entropy Principle

1. What is the increase of entropy principle?
2. Is universe an isolated system? What is the surroundings of the universe?
3. When will the entropy value of the universe attained its maximum value?
4. Indicate whether the following statements are true or false for a reversible process:
   (A) Q=0.
   (B) Work may be calculated using the equation of state.
   (C) The entropy change of the system is zero.
   (D) The total entropy change of the system and the surroundings is zero.
5. Indicate whether the following statements are true or false for a reversible adiabatic process:
   (A) Q=0.
   (B) W=0.
   (C) The entropy change of the system is always zero.
   (D) The total entropy change of the system and the surroundings is zero.
   (E) The temperature of the system does not change.
6. Indicate whether the following statements are true or false for a reversible isothermal process:
   (A) Q=T()S).
   (B))U=0.
   (C) The entropy change of the system is always zero.
   (D) The total entropy change of the system and the surroundings is zero.
   (E) Q=W.
   (F) The entropy change of the environment is negative.
   (G) The total entropy change of the system and the surroundings is negative.
7. Determine which of the following cases are feasible:
   (A) An adiabatic compressor where the inlet and outlet entropies are equal.

(B) An actual adiabatic pump where the inlet and outlet entropies are equal.
(C) The entropy of steam decreases when it passes through an adiabatic turbine.
(D) An adiabatic heat exchanger where the entropy of the cooling fluid decreases.
(E) A heat engine that operates in a cycle and interacts with one reservoir only.
(F) Steam passing through a throttling valve undergoes no enthalpy change.
(G) Steam passing through a throttling valve undergoes no entropy change.
(H) An isothermal process in a system the entropy of which decreases.
(I) An adiabatic process in a system the entropy of which decreases.

8. Which property or properties among p, T, v, u, h, and s have meaning in non-equilibrium states, which do not, and why?
9. A reservoir at 290 K receives 800 kJ of heat from the surroundings at 300 K.
   (A) What is the entropy change of the reservoir? What is the entropy change of the surroundings?
   (B) Could the process be performed reversibly?
   ANSWER: (A) 2.758 kJ/K, -2.667 kJ/K, (B) no.
10. Steam at 0.4 Mpa and 433 K contained in a cylinder and piston device is expanded freely to 0.1 Mpa and 350 K. Can this process be adiabatic? Can this process be reversible?
    ANSWER: q=-2417 kJ/kg, no.
11. Steam at 2 Mpa and 673 K expands freely in a cylinder and piston device to 1 Mpa and 340 K. Can this process be adiabatic? Is the process reversible? If so, why?
    ANSWER: q=-2930 kJ/kg, no.
12. Air at 2 Mpa and 673 K expands freely in a cylinder and piston device to 1 Mpa and 340 K. Can this process be adiabatic? Is the process reversible? If so, why?
    ANSWER: q=-237.2 kJ/kg, no.
13. A stream of hot air at a mass flow rate of 1 kg/s, 200 kPa and 673 K is mixed with a stream of cold air at a mass flow rate of 1 kg/s, 200 kPa and 273 K in an adiabatic mixing chamber. Find the exiting air mass flow rate and temperature. Find the rate of entropy change of the air. Is the process reversible? If so, why?
    ANSWER: 2 kg/s, 473 K, 0.01976 kW/K, no.
14. A throttling calorimeter was connecting to a pipeline containing wet steam at 3 Mpa, the exit state properties were found to be 392 K and 101 kPa.
    (A) Determine the quality of the steam in the pipeline.
    (B) What is the entropy change of the steam?
    (C) Is the process reversible for the throttling calorimeter? If so, why?
    ANSWER: (A)0.9502, (B) 1.45 kJ/[kg(K)], (C) no.
15. A salesperson claims to have a 100 kW steam turbine. Steam enters the turbine at 0.8 Mpa and 523 K and leaves the turbine at 0.2 Mpa and 373 K. The temperature of the surroundings is 298 K. Can this turbine be an adiabatic? Explain.
    ANSWER: Isentropic exit T is 393.4 K, no.
16. A salesperson claims to have a 50 kW steam compressor. Steam enters the compressor at 0.1 Mpa and 373 K and leaves the compressor at 1.2 Mpa and 623 K. The temperature of the surroundings is 298 K. Can this compressor be an adiabatic? Explain.
    ANSWER:)s=-0.13 kJ/[kg(K)], no.

17. A pump with an isentropic efficiency of 0.8 pumps water at 0.1 Mpa and 298 K and discharges it at 5 Mpa. Find the entropy change of the water upon passing through the pump, and the enthalpy change of the water upon passing through the pump.
    ANSWER: 0.0041 kJ/[kg(K)], 6.13 kJ/kg.
18. A chemical plant requires large quantities of steam of low quality (10%) at 348 K. High pressure boilers are quite expensive. An inventor suggests that saturated atmospheric pressure steam (cheap boiler) could be mixed with high pressure water (7 Mpa and 300 K) in an adiabatic steady flow process to produce the desired low quality steam. The inventor claims that the requirements could be satisfied by mixing two parts (by mass) of water with one part of steam.
    What is the rate of entropy change of the system? Does it violate the second law?
    ANSWER: 0.2155 kW/K, no.
19. Water must be pumped at a rate of 10 kg/s from a river where the conditions are 100 kPa and 283 K, to a pressure of 1500 kPa. An inventor suggests an adiabatic device that will do the job provided it is supplied with 1 kg/s of saturated steam at 300 kPa. A single mixed stream exits the device.
    (A) If the inventor is right, determine the state at the exit of the device in view of the first law of thermodynamics.
    (B) What is the rate of entropy change of the system? Is the process possible in view of the second law of thermodynamics?
    ANSWER: (A) 348.5 K, h=316.5 kJ/kg, 1.02 kJ/[kg(K)], (B) 2.40 kW/K, possible.
20. One kilogram of water at 300 K is brought into contact with a heat reservoir at 340 K. When the water has reached 340 K. What is the entropy change of the water? What is the entropy change of the heat reservoir? What is the entropy change of the universe?

6.12. SECOND LAW EFFICIENCY AND EFFECTIVENESS OF CYCLES

In the conversion of heat to work in a heat engine, or the conversion of work to heat in a refrigerator or heat pump, the thermal cycle efficiency (0) of the heat engine and cycle COP of the refrigerator ($\exists_R$) or COP of heat pump ($\exists_{HP}$) are defined in Chapter 5 as

$$0=W_{net}/Q_{add} \tag{6.12.1}$$

$$\exists_R=Q_{cool}/W_{net} \tag{6.12.2}$$

and

$$\exists_{HP}=Q_{heat}/W_{net} \tag{6.12.3}$$

The conversion of heat to work or vice versa in these devices are essentially the First law of thermodynamics. The cycle efficiency (0) of the heat engine is usually referred to as the first law efficiency of the heat engine.

In order to compare the work actually delivered by a heat engine with the work that theoretically could have been delivered with the same cycle input by the best possible reversible heat engine that might have been used, a second law efficiency is needed.

The second law efficiency of a heat engine is defined as the ratio of the actual heat engine efficiency to the maximum possible reversible heat engine efficiency operating between the same temperature limits.

$$0_2=0/0_{rev}=W/W_{rev}=0/0_{Carnot} \quad (6.12.4)$$

The first law efficiency of the heat engine is related to the second law efficiency by the relation

$$0=0_2 0_{rev}=0_2 0_{Carnot} \quad (6.12.5)$$

Note that the Carnot cycle efficiency is a function of temperature range. A decrease in the thermal potential (T_H-T_U) between the source and end use of results in a decrease in Carnot cycle efficiency and a corresponding increase in the second law efficiency. This means that inefficient use of a fuel occurs when the temperature of the products of combustion is significantly higher than the use of temperature of the system to which heat is transferred. An example is the burning of fossil fuel to heat water. There is an excessive temperature gap between the high temperature of combustion and the low temperature of the end use. This represents an unexploited energy supply, and the fuel should be first used in high-temperature applications. The heat rejected from the high-temperature applications can then be cascaded to low-temperature applications.

Similarly, the second law effectiveness $\exists_2$ of a refrigerator or heat pump can also be expressed as the ratio of the actual cycle COP to the maximum possible reversible cycle COP under the same conditions.

$$\exists_2=COP/COP_{rev}=COP/COP_{Carnot}=\exists/\exists_{rev} \quad (6.12.6)$$

The first law COP of the refrigerator or heat pump is related to the second law effectiveness by the relation

$$\exists=\exists_2\exists_{rev}=\exists_2\exists_{Carnot} \quad (6.12.5)$$

The above definitions for the second law efficiency and second law effectiveness do not apply to devices that are not intended to produce or consume heat and work.

The second law efficiency and second law effectiveness are both less than unity, or in the limit equal to unity. They are valuable in an analysis of alternative means of accomplishing a given task. They are the measure of how wisely energy is being used or how well it is being conserved.

Example 6.12.1.

An actual gas turbine power plant operating at steady state receives 1 kg/s of air at 100 kPa and 17EC. The air is compressed to 700 kPa and reaches a maximum temperature of 900EC in the combustion chamber. The products of combustion expand in the turbine back to 100 kPa. Assume the compressor efficiency is 80% and the turbine efficiency is 82%. Determine the actual power produced by the plant, the actual plant cycle efficiency, the Carnot cycle efficiency operating between the same maximum and minimum temperature of the cycle, and the second law cycle efficiency.

To solve this problem by CyclePad, we take the following steps:

1. Build
   (A) Take a source, a compressor, a turbine, a heater, a cooler, and a sink from the open-system inventory shop and connect them to form the Brayton cycle.
   (B) Switch to analysis mode.
2. Analysis
   (A) Assume (a) the compressor is adiabatic with 80% efficiency, (b) the turbine is adiabatic with 82% efficiency, (c) the combustion chamber is isobaric, and (d) the cooler is isobaric. (B) Input the given information: (a) working fluid is air, (b) mass flow rate, pressure and temperature of the air at the inlet of the compressor are 1 kg/s, 100 kPa and 17EC, and (c) pressure and temperature of the air at the exit of the combustion chamber are 700 kPa and 900EC.
3. Display results: the net power output of the actual cycle is 411.7 kW; the actual plant cycle efficiency is 22.92%; the Carnot cycle efficiency operating between the same maximum and minimum temperature of the cycle is 75.27%, and the second law cycle efficiency is 22.92/75.27=30.45%.

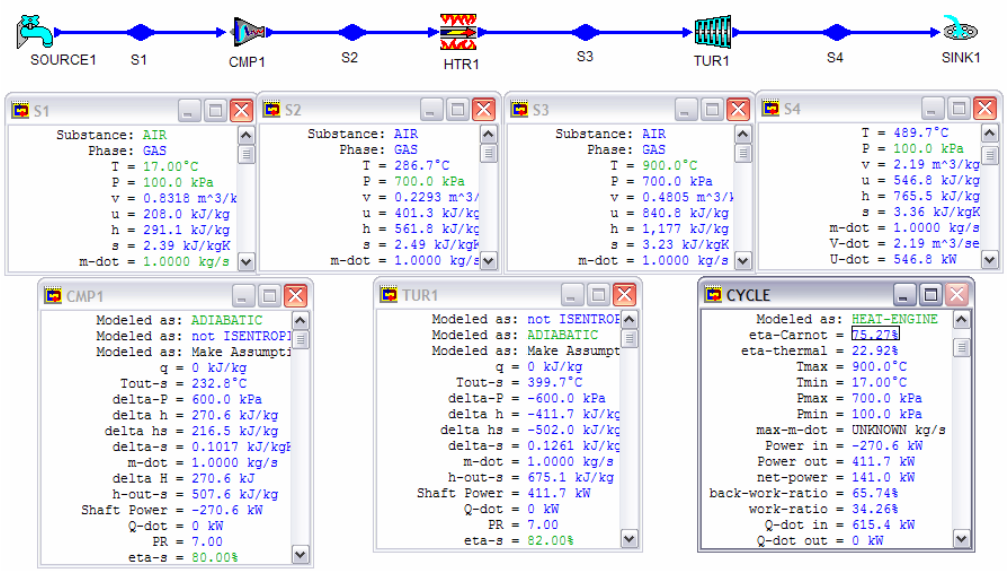

Figure E6.12.1. Second law efficiency of a Brayton cycle

Example 6.12.2.

An ideal refrigerant plant operating at steady state receives 0.1 kg/s of saturated R-134a vapor at 241.2 K. The freon is compressed to 1700 kPa and cooled to saturated liquid. Determine the actual cooling load provided by the refrigerant plant, the actual plant cycle COP, the Carnot cycle COP operating between the same maximum and minimum temperature of the cycle, and the second law cycle efficiency.

To solve this problem by CyclePad, we take the following steps:

1. Build
   (A) Take a compressor, a cooler, a throttling valve, and a heater from the open-system inventory shop and connect them to form a vapor refrigeration cycle.
   (B) Switch to analysis mode.
2. Analysis
   (A) Assume (a) the compressor is adiabatic with 100% efficiency, (b) the heater is isobaric, and (c) the cooler is isobaric. (B) Input the given information: (a) working fluid is R-134a, (b) mass flow rate, quality and temperature of the refrigerant at the inlet of the compressor are 0.1 kg/s, 1.0, and 241.2 K, (c) pressure at the exit of the compressor is 1700 kPa, and (d) quality of the saturated refrigerant at the inlet of the valve is 0.
3. Display results

Temperature of the R-134a at the exit of the compressor is 346.2 K, the cooling load of the cycle is 9 kW; the cycle COP is 1.39; the Carnot cycle COP operating between the same maximum and minimum temperature of the cycle is $T_L/(T_H-T_L)$=241.2/(346.2-241.2)=2.3, and the second law cycle COP is 1.39/2.3=60.43%.

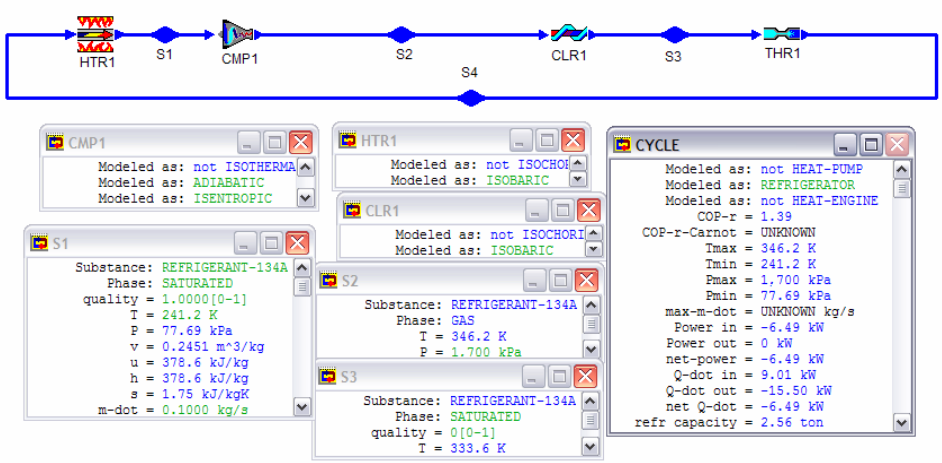

Figure E6.12.2. Second law COP of a refrigeration cycle

Example 6.12.3.

A heat pump operating at steady state receives 0.1 lbm/s of saturated R-12 vapor at 60 psia. The freon is compressed to 200 psia and cooled to saturated liquid. Determine the actual

heating load provided by the heat pump, the actual plant cycle COP, the Carnot cycle COP operating between the same maximum and minimum temperature of the cycle, and the second law cycle efficiency.

To solve this problem by CyclePad, we take the following steps:

1. Build
   (A) Take a compressor, a cooler, a throttling valve, and a heater from the open-system inventory shop and connect them to form a vapor heat pump cycle.
   (B) Switch to analysis mode.
2. Analysis
   (A) Assume (a) the compressor is adiabatic with 100% efficiency, (b) the heater is isobaric, and (c) the cooler is isobaric. (B) Input the given information: (a) working fluid is R-12, (b) mass flow rate, quality and pressure of the refrigerant at the inlet of the compressor are 0.1 lbm/s, 1.0, and 60 psia, (c) pressure of the refrigerant at the exit of the compressor is 200 psia, and (d) quality of the refrigerant at the inlet of the valve is 0.
3. Display results

Temperature of the R-134a at the exit of the compressor is 601.8ER, the heating load of the cycle is 5.25 Btu/s; the cycle COP is 5.71; the Carnot cycle COP operating between the same maximum and minimum temperature of the cycle is $T_H/(T_H-T_L)$=601.8/(601.8-508.2)=6.429, and the second law cycle COP is 5.71/6.429=88.81%.

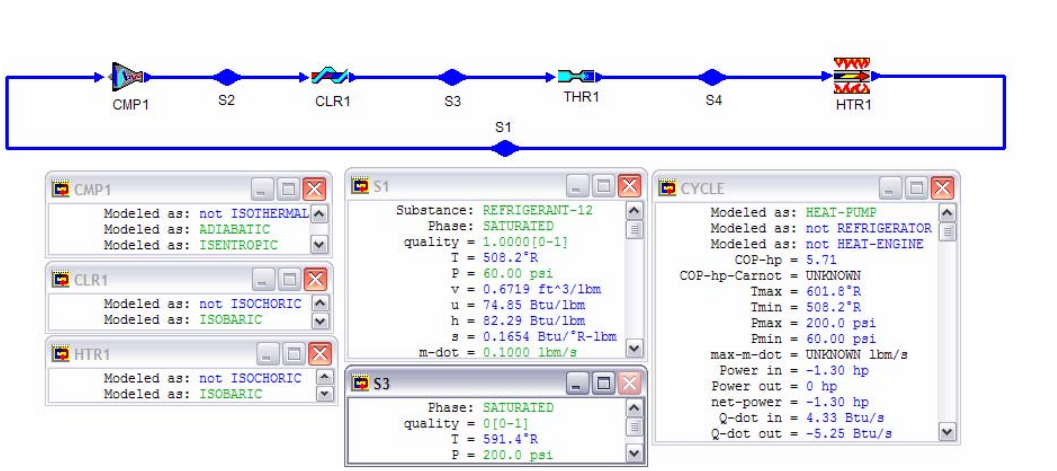

Figure E6.12.3. Second law COP of a heat pump

Homework 6.12. Second law efficiency and effectiveness of cycles

1. A Rankine cycle using steam as the working fluid in which the boiler pressure is 10 Mpa and condenser pressure is 50 kPa. The temperature of the water at the inlet of the pump is 55EC. The steam leaves the boiler at 500EC. The turbine efficiency is 80%. Determine the net power output, minimum temperature and maximum

temperature of the cycle, cycle efficiency, Carnot cycle efficiency operating between the same maximum and minimum temperature of the cycle, and second law cycle efficiency of the cycle.

ANSWER: 855.2 kW, 55EC, 500EC, 27.29%, 57.56%, 47.41%.

2. A Rankine cycle using steam as the working fluid in which the boiler pressure is 10 Mpa and condenser pressure is 50 kPa. The temperature of the water at the inlet of the pump is 55EC. The steam leaves the boiler at 550EC. The turbine efficiency is 80%. Determine the net power output, minimum temperature and maximum temperature of the cycle, cycle efficiency, Carnot cycle efficiency operating between the same maximum and minimum temperature of the cycle, and second law cycle efficiency of the cycle.

   ANSWER: 911.7 kW, 55EC, 550EC, 27.96%, 60.13%, 46.50%.

3. A Rankine cycle using steam as the working fluid in which the boiler pressure is 10 Mpa and condenser pressure is 50 kPa. The water at the inlet of the pump is saturated liquid. The steam leaves the boiler at 500EC. The turbine efficiency is 80%. Determine the net power output, minimum temperature and maximum temperature of the cycle, cycle efficiency, Carnot cycle efficiency operating between the same maximum and minimum temperature of the cycle, and second law cycle efficiency of the cycle.

   ANSWER: 855.1 kW, 81.34EC, 500EC, 28.28%, 54.15%, 52.23%.

4. A Rankine cycle using steam as the working fluid in which the boiler pressure is 10 Mpa and condenser pressure is 50 kPa. The water at the inlet of the pump is saturated liquid. The steam leaves the boiler at 550EC. The turbine efficiency is 80%. Determine the net power output, minimum temperature and maximum temperature of the cycle, cycle efficiency, Carnot cycle efficiency operating between the same maximum and minimum temperature of the cycle, and second law cycle efficiency of the cycle.

   ANSWER: 911.5 kW, 81.34EC, 550EC, 28.94%, 56.94%, 50.82%.

5. A reheat-Rankine cycle using steam as the working fluid in which the boiler pressure is 10 Mpa and condenser pressure is 50 kPa. The temperature of the water at the inlet of the pump is 35EC. The steam leaves the boiler and the reheater both at 500EC. Both turbine efficiency are 80%.The mass rate flow of the steam is 100 kg/s. The reheater pressure is 200 kPa. Determine the net power output, minimum temperature and maximum temperature of the cycle, cycle efficiency, Carnot cycle efficiency operating between the same maximum and minimum temperature of the cycle, and second law cycle efficiency of the cycle.

   ANSWER: 103100 kW, 35EC, 500EC, 25.57%, 60.14%, 42.52%.

6. A reheat-Rankine cycle using steam as the working fluid in which the boiler pressure is 10 Mpa and condenser pressure is 50 kPa. The temperature of the water at the inlet of the pump is 35EC. The steam leaves the boiler and the reheater both at 450EC. Both turbine efficiency are 80%.The mass rate flow of the steam is 100 kg/s. The reheater pressure is 200 kPa. Determine the net power output, minimum temperature and maximum temperature of the cycle, cycle efficiency, Carnot cycle efficiency operating between the same maximum and minimum temperature of the cycle, and second law cycle efficiency of the cycle.

ANSWER: 95780 kW, 35EC, 450EC, 24.72%, 57.39%, 43.07%.

7. A reheat-Rankine cycle using steam as the working fluid in which the boiler pressure is 10 Mpa and condenser pressure is 50 kPa. The water at the inlet of the pump is saturated liquid. The steam leaves the boiler and the reheater both at 450EC. Both turbine efficiency are 80%.The mass rate flow of the steam is 100 kg/s. The reheater pressure is 200 kPa. Determine the net power output, minimum temperature and maximum temperature of the cycle, cycle efficiency, Carnot cycle efficiency operating between the same maximum and minimum temperature of the cycle, and second law cycle efficiency of the cycle.
   ANSWER: 95750 kW, 81.34EC, 450EC, 26.02%, 50.98%, 43.07%.
8. A reheat-Rankine cycle using steam as the working fluid in which the boiler pressure is 10 Mpa and condenser pressure is 50 kPa. The water at the inlet of the pump is saturated liquid. The steam leaves the boiler and the reheater both at 500EC. Both turbine efficiency are 80%.The mass rate flow of the steam is 100 kg/s. The reheater pressure is 200 kPa. Determine the net power output, minimum temperature and maximum temperature of the cycle, cycle efficiency, Carnot cycle efficiency operating between the same maximum and minimum temperature of the cycle, and second law cycle efficiency of the cycle.
   ANSWER: 103100 kW, 81.34EC, 500EC, 26.86%, 54.15%, 46.90%.
9. Air enters a Diesel cycle at 15EC and 100 kPa. The compression ratio of the cycle is 18. The heating value of the fuel is 40000 kJ/kg. The heat added in the combustion chamber is 1800 kJ/kg. Determine the minimum temperature and maximum temperature of the cycle, cycle efficiency, Carnot cycle efficiency operating between the same maximum and minimum temperature of the cycle, and second law cycle efficiency of the cycle.
   ANSWER: 15EC, 2436EC, 59.07%, 89.37%, 66.03%.
10. Air enters a Diesel cycle at 15EC and 100 kPa. The compression ratio of the cycle is 16. The heating value of the fuel is 40000 kJ/kg. The heat added in the combustion chamber is 1800 kJ/kg. Determine the minimum temperature and maximum temperature of the cycle, cycle efficiency, Carnot cycle efficiency operating between the same maximum and minimum temperature of the cycle, and second law cycle efficiency of the cycle.
    ANSWER: 15EC, 2394EC, 56.72%, 89.20%, 63.59%.
11. Air enters a Diesel cycle at 15EC and 100 kPa. The compression ratio of the cycle is 14. The heating value of the fuel is 40000 kJ/kg. The heat added in the combustion chamber is 1800 kJ/kg. Determine the minimum temperature and maximum temperature of the cycle, cycle efficiency, Carnot cycle efficiency operating between the same maximum and minimum temperature of the cycle, and second law cycle efficiency of the cycle.
    ANSWER: 15EC, 2349EC, 53.87%, 89.01%, 60.52%.
12. Air enters a Diesel cycle at 15EC and 100 kPa. The compression ratio of the cycle is 12. The heating value of the fuel is 40000 kJ/kg. The heat added in the combustion chamber is 1800 kJ/kg. Determine the minimum temperature and maximum temperature of the cycle, cycle efficiency, Carnot cycle efficiency operating between

the same maximum and minimum temperature of the cycle, and second law cycle efficiency of the cycle.

ANSWER: 15EC, 2299EC, 50.33%, 88.80%, 56.68%.

13. Air enters a Diesel cycle at 15EC and 100 kPa. The compression ratio of the cycle is 10. The heating value of the fuel is 40000 kJ/kg. The heat added in the combustion chamber is 1800 kJ/kg. Determine the minimum temperature and maximum temperature of the cycle, cycle efficiency, Carnot cycle efficiency operating between the same maximum and minimum temperature of the cycle, and second law cycle efficiency of the cycle.

    ANSWER: 15EC, 2245EC, 45.76%, 88.55%, 51.68%.

14. Air enters a Diesel cycle at 15EC and 100 kPa. The compression ratio of the cycle is 8. The heating value of the fuel is 40000 kJ/kg. The heat added in the combustion chamber is 1800 kJ/kg. Determine the minimum temperature and maximum temperature of the cycle, cycle efficiency, Carnot cycle efficiency operating between the same maximum and minimum temperature of the cycle, and second law cycle efficiency of the cycle.

    ANSWER: 15EC, 2183EC, 39.56%, 88.27%, 44.82%.

15. Air enters a Diesel cycle at 15EC and 100 kPa. The compression ratio of the cycle is 14. The heating value of the fuel is 40000 kJ/kg. The heat added in the combustion chamber is 1800 kJ/kg. Determine the minimum temperature and maximum temperature of the cycle, cycle efficiency, Carnot cycle efficiency operating between the same maximum and minimum temperature of the cycle, and second law cycle efficiency of the cycle.

    ANSWER: 15EC, 2349EC, 53.87%, 89.01%, 60.52%.

16. Air enters an Otto cycle at 15EC and 100 kPa. The compression ratio of the cycle is 8. The heating value of the fuel is 40000 kJ/kg. The heat added in the combustion chamber is 1800 kJ/kg. Determine the minimum temperature and maximum temperature of the cycle, cycle efficiency, Carnot cycle efficiency operating between the same maximum and minimum temperature of the cycle, and second law cycle efficiency of the cycle.

    ANSWER: 15EC, 2900EC, 56.47%, 90.92%, 62.11%.

17. Air enters an Otto cycle at 15EC and 100 kPa. The compression ratio of the cycle is 12. The heating value of the fuel is 40000 kJ/kg. The heat added in the combustion chamber is 1800 kJ/kg. Determine the minimum temperature and maximum temperature of the cycle, cycle efficiency, Carnot cycle efficiency operating between the same maximum and minimum temperature of the cycle, and second law cycle efficiency of the cycle.

    ANSWER: 15EC, 3017EC, 62.99%, 91.24%, 69.04%.

18. Air enters an Otto cycle at 15EC and 100 kPa. The compression ratio of the cycle is 16. The heating value of the fuel is 40000 kJ/kg. The heat added in the combustion chamber is 1800 kJ/kg. Determine the minimum temperature and maximum temperature of the cycle, cycle efficiency, Carnot cycle efficiency operating between the same maximum and minimum temperature of the cycle, and second law cycle efficiency of the cycle.

    ANSWER: 15EC, 3112EC, 67.01%, 91.49%, 73.24%.

19. Determine the COP, horsepower required and cooling load of a basic vapor refrigeration cycle using R-12 as the working fluid in which the condenser pressure is 130 psia and the evaporation pressure is 35 psia. The circulation rate of fluid is 0.1 lbm/s. Determine the cooling load, of the cy minimum temperature and maximum temperature cle, COP, Carnot COP operating between the same maximum and minimum temperature of the cycle, and second law COP of the refrigerator.
    ANSWER: 4.84 Btu/s, 478.4ER, 566.1ER, 5.38, 5.455, 0.9826.
20. Determine the COP, horsepower required and cooling load of a vapor refrigeration cycle using R-12 as the working fluid in which the condenser pressure is 130 psia and the evaporation pressure is 35 psia. The compressor efficiency is 88%. The circulation rate of fluid is 0.1 lbm/s. Determine the cooling load, minimum temperature and maximum temperature of the cycle, COP, Carnot COP operating between the same maximum and minimum temperature of the cycle, and second law COP of the refrigerator.
    ANSWER: 4.84 Btu/s, 478.4ER, 572.9ER, 4.73, 6.062, 0.7802.
21. Determine the COP, horsepower required and cooling load of a vapor refrigeration cycle using R-12 as the working fluid in which the condenser pressure is 130 psia and the evaporation pressure is 35 psia. The compressor efficiency is 85%. The circulation rate of fluid is 0.1 lbm/s. Determine the cooling load, minimum temperature and maximum temperature of the cycle, COP, Carnot COP operating between the same maximum and minimum temperature of the cycle, and second law COP of the refrigerator.
    ANSWER: 4.84 Btu/s, 478.4ER, 574.9ER, 4.57, 5.958, 0.7671.
22. Determine the COP, horsepower required and cooling load of a vapor refrigeration cycle using R-12 as the working fluid in which the condenser pressure is 130 psia and the evaporation pressure is 35 psia. The compressor efficiency is 80%. The circulation rate of fluid is 0.1 lbm/s. Determine the cooling load, minimum temperature and maximum temperature of the cycle, COP, Carnot COP operating between the same maximum and minimum temperature of the cycle, and second law COP of the refrigerator.
    ANSWER: 4.84 Btu/s, 478.4ER, 578.6ER, 4.3, 5.774, 0.7447.
23. Determine the COP, horsepower required and cooling load of a basic vapor refrigeration cycle using R-12 as the working fluid in which the condenser pressure is 130 psia and the evaporation pressure is 35 psia. The circulation rate of fluid is 0.1 lbm/s. The temperature of the refrigerant at the exit of the compressor is 577ER. Determine the cooling load, minimum temperature and maximum temperature of the cycle, COP, Carnot COP operating between the same maximum and minimum temperature of the cycle, and second law COP of the refrigerator.
    ANSWER: 4.84 Btu/s, 478.4ER, 577ER, 4.41, 4.852, 0.9089.
24. Determine the COP, horsepower required and cooling load of a basic vapor refrigeration cycle using R-12 as the working fluid in which the condenser pressure is 130 psia and the evaporation pressure is 35 psia. The circulation rate of fluid is 0.1 lbm/s. The temperature of the refrigerant at the exit of the compressor is 600ER. Determine the cooling load, minimum temperature and maximum temperature of the

cycle, COP, Carnot COP operating between the same maximum and minimum temperature of the cycle, and second law COP of the refrigerator.
ANSWER: 4.84 Btu/s, 478.4ER, 600ER, 3.21, 3.934, 0.8159.

25. Determine the COP, horsepower required and cooling load of a basic vapor refrigeration cycle using R-12 as the working fluid in which the condenser pressure is 130 psia and the evaporation pressure is 35 psia. The circulation rate of fluid is 0.1 lbm/s. The temperature of the refrigerant at the exit of the compressor is 620ER. Determine the cooling load, minimum temperature and maximum temperature of the cycle, COP, Carnot COP operating between the same maximum and minimum temperature of the cycle, and second law COP of the refrigerator.
ANSWER: 4.84 Btu/s, 478.4ER, 620ER, 2.60, 3.379, 0.7700.
26. Determine the COP, horsepower required and cooling load of a basic vapor refrigeration cycle using R-12 as the working fluid in which the condenser pressure is 130 psia and the evaporation pressure is 35 psia. The circulation rate of fluid is 0.1 lbm/s. The temperature of the refrigerant at the exit of the compressor is 590ER. Determine the cooling load, minimum temperature and maximum temperature of the cycle, COP, Carnot COP operating between the same maximum and minimum temperature of the cycle, and second law COP of the refrigerator.
ANSWER: 4.84 Btu/s, 478.4ER, 590ER, 3.64, 4.28, 0.8491.
27. A basic vapor heat pump cycle using R-134a as the working fluid in which the condenser pressure is 900 kPa and the evaporation pressure is 240 kPa. The circulation rate of fluid is 0.1 kg/s. The compressor efficiency is 100%. Determine the heating load, minimum temperature and maximum temperature of the cycle, COP, Carnot COP operating between the same maximum and minimum temperature of the cycle, and second law COP of the refrigerator.
ANSWER: 17.27 kW, 267.6 K, 313.1 K, 6.28, 6.881, 0.9126.
28. A basic vapor heat pump cycle using R-134a as the working fluid in which the condenser pressure is 1000 kPa and the evaporation pressure is 240 kPa. The circulation rate of fluid is 0.1 kg/s. The compressor efficiency is 100%. Determine the heating load, minimum temperature and maximum temperature of the cycle, COP, Carnot COP operating between the same maximum and minimum temperature of the cycle, and second law COP of the refrigerator.
ANSWER: 16.92 kW, 267.6 K, 317.3 K, 5.69, 6.384, 0.8912.
29. A basic vapor heat pump cycle using R-134a as the working fluid in which the condenser pressure is 1200 kPa and the evaporation pressure is 240 kPa. The circulation rate of fluid is 0.1 kg/s. The compressor efficiency is 100%. Determine the heating load, minimum temperature and maximum temperature of the cycle, COP, Carnot COP operating between the same maximum and minimum temperature of the cycle, and second law COP of the refrigerator.
ANSWER: 16.25 kW, 267.6 K, 324.7 K, 4.84, 5.687, 0.8511.
30. A basic vapor heat pump cycle using R-134a as the working fluid in which the condenser pressure is 1200 kPa and the evaporation pressure is 240 kPa. The circulation rate of fluid is 0.1 kg/s. The compressor efficiency is 90%. Determine the heating load, minimum temperature and maximum temperature of the cycle, COP,

Carnot COP operating between the same maximum and minimum temperature of the cycle, and second law COP of the refrigerator.
ANSWER: 16.63 kW, 267.6 K, 328.0 K, 4.46, 5.430, 0.8213.

31. A basic vapor heat pump cycle using R-134a as the working fluid in which the condenser pressure is 1200 kPa and the evaporation pressure is 240 kPa. The circulation rate of fluid is 0.1 kg/s. The compressor efficiency is 80%. Determine the heating load, minimum temperature and maximum temperature of the cycle, COP, Carnot COP operating between the same maximum and minimum temperature of the cycle, and second law COP of the refrigerator.
ANSWER: 17.09 kW, 267.6 K, 332.1 K, 4.07, 5.149, 0.7905.

6.13. AVAILABLE AND UNAVAILABLE ENERGY

The energy which is ideally available to do work is called *available energy*. In the Carnot cycle T-s diagram as shown in Figure 6.13.1, we see that a portion of the heat supplied (Area 623562) from a constant-temperature heat source at high-temperature T_H must be rejected to a constant-temperature heat sink at low-temperature T_L. The amount of heat rejected (Area 41654) for a given heat input is reduced by lowering the sink temperature T_L. However, in practice there is a minimum value of T_L which can be used. This normally corresponds to the ambient temperature (T_o) of the heat engine. The minimum energy which could be rejected by the heat engine is called *unavailable energy*. Unavailable energy is the portion of energy supplied from the heat source which is not converted into work. If the ambient temperature is T_L (T_L=T_o), it is apparent that the available energy is Area 12341 and the unavailable energy is Area 41654. The unavailable energy is always determined by (T_o))S, and is represented by a rectangular area. In general, many applications of interest involves a heat source of variable temperature T_H. The differential amount of available energy is (T_H -T_o)dS. The total amount of available energy is I(T_H -T_o)dS.

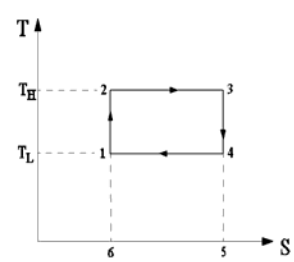

Figure 6.13.1. Carnot cycle T-s diagram

Homework 6.13. Available and Unavailable Energy

1. What are available and unavailable energy?

2. What is minimum temperature value of heat rejection T_L which can be used in real world?

6.14. SUMMARY

A microscopic property called entropy is defined based on the Clausius inequality. Heat and entropy are related by the Second law of thermodynamics for a closed system and is expressed as $)S=*Q/T + S_{generation}$, where $S_{generation}$ is the non-negative entropy generated by irreversibility during a process. Heat can be shown by the area underneath a process on a T-s diagram.

The Second law of thermodynamics for an open system is expressed as $)S=*Q/T + S_i+S_e+S_{generation}$. For the case of steady flow and steady state process, The Second law of thermodynamics for an open system is expressed as $0=*Q/T + S_i+S_e+S_{generation}$.

Entropy change of pure substances, ideal gases and incompressible substances are related to other properties. These relationships are listed on tables and are built in the software CyclePad.

An isentropic process is a constant entropy process. It is also a reversible adiabatic process. It serves as an idealization of an adiabatic process for many engineering applications. The isentropic or adiabatic efficiency for turbines, compressors and pumps are expressed as: $0_{turbine} =w_{actual\ turbine} /w_{isentropic\ turbine}$, $0_{compressor} =w_{isentropic\ compressor} /w_{actual\ compressor}$, and $0_{pump} =w_{isentropic\ pump} /w_{actual\ pump}$.

The increase of entropy principle states that the entropy change of an isolated system with respect of time is always non-negative. The universe is an isolated system, the entropy change of the universe with respect of time is always non-negative until it reaches its equilibrium state.

The second law cycle efficiency is a measure of the performance of a cyclic device relative to the performance under reversible conditions for Carnot cycle.

The energy which is ideally available to do work is called available energy. The minimum energy which could be rejected by the heat engine is called unavailable energy.

Chapter 7

EXERGY AND IRREVERSIBILITY

7.1. INTRODUCTION

By adding energy from a high temperature thermal reservoir in the form of heat to a heat engine, work can be performed by the engine through the transformation of heat into work and rejects energy to a low temperature thermal reservoir in the form of heat. Losses occur in such a transformation. The Second law of thermodynamics states that a continuous cycle for accomplishing this transformation will not produce a quantity of work that is exactly equivalent to the heat provided from the high temperature thermal reservoir. Heat cannot be converted completely and continuously into work, but work can always be converted completely and continuously into heat.

As shown in Chapter 5 and Chapter 6, the most efficient cycle to produce work is a reversible Carnot power cycle. But even with the use of the reversible Carnot power cycle, the efficiency of heat to work conversion is always less than unity. It is important for engineers to know what is the maximum amount of work that can be obtained for a cycle or a process with respect to some datum. The environmental condition is usually chosen as the reference datum. It is also important to establish a reference scale for comparison of the work that can be developed in actual cycles or a processes.

This chapter deals with the concept of exergy and irreversibilitiy which provide the information needed to determine the maximum useful work that a system in a given state can perform and the evaluation of the effects of irreversibility.

7.2. REVERSIBLE AND IRREVERSIBLE WORK

Reversible work is the maximum work done by a system in a given change of state.

To find a general expression for the reversible work, let us consider a system undergoing a change of state from an initial state 1 with energy E_1 and entropy S_1 to a final state 2 with energy E_2 and entropy S_2 by means of several processes 1-2. From previous chapters, we know that energy is a property which is a point function and work is a path function. The First law applied to this system for an infinitesimal change is

$$*Q-*W=dE \tag{7.2.1}$$

The energy change of the system for all processes between the specified states 1 and 2 is (E_2-E_1). (E_2-E_1) is independent of the process between the specified states 1 and 2. However the work produced by the system W_{12} is dependent of the process between the specified states 1 and 2. The First law can give us only the difference (Q_{12} -W_{12}) for specified end states. Many different values of Q_{12} and W_{12} are possible. We must use the second law to find the maximum amount of work obtainable.

Since the difference between $*Q$ and $*W$ for an infinitesimal change is identical for reversible and irreversible processes, we have

$$*Q_{reversible} - *W_{reversible} = *Q_{irreeversible} - *W_{irreversible} = dE \quad (7.2.2)$$

When the system receives heat $*Q$, it experiences a change in entropy dS. If the heat transfer process is reversible, the environment at temperature T_o supplying the heat $*Q$ undergoes a change of entropy dS_o, which is negative and numerically equal to the entropy change of the system dS. If the heat transfer process is irreversible, dS_o is numerically less than dS. Thus we can write

$$dS + dS_o = 0 \text{ for reversible process} \quad (7.2.3a)$$

and

$$dS + dS_o > 0 \text{ for irreversible process} \quad (7.2.3b)$$

The Second law of thermodynamics states that:

$$*Q_{reversible} = T_o(dS) \text{ for reversible process} \quad (7.2.4a)$$

and

$$*Q_{irreversible} > T_o(dS) \text{ for irreversible process} \quad (7.2.4b)$$

Thus the reversible heat ($*Q_{reversible}$) and irreversible heat ($*Q_{irreversible}$) are different.

$$*Q_{irreversible} > *Q_{reversible} \quad (7.2.5)$$

Therefore the work done by the system during a reversible process called *reversible work* ($*W_{reversible}$) is larger than the work done by the system during a irreversible process called *irreversible work* ($*W_{irreversible}$).

$$*W_{reversible} > *W_{irreversible} \quad (7.2.6)$$

The work done by a system during a reversible process is greater than the work done by the system during an irreversible process connecting the same end states. It can be shown that all reversible processes operating between the same two end states will produce identical amount of work under the same environment. The quantity $W_{reversible}$ is called reversible work.

Example 7.2.1.

An air stream at 1000EC and 1000 kPa with mass flow rate of 1 kg/s enters an adiabatic turbine. The stream leaves the turbine at 100 kPa. Determine the work of the turbine if the turbine is (A) reversible, and (B) irreversible with an efficiency of 85%.

To solve this problem by CyclePad, we take the following steps:

1. Build
   (A) Take a source, a turbine, and a sink from the open-system inventory shop and connect them.
   (B) Switch to analysis mode.
2. Analysis
   (A) Assume the turbine is adiabatic and reversible (with efficiency of 100%) in case (A), and the turbine is adiabatic and irreversible (with efficiency of 85%) in case (B).
   (B) Input the given information: (a) working fluids is air, (b) mass flow rate, pressure and temperature of the air at the inlet are 1 kg/s, 1000 kPa and 1000EC, (c) pressure of the air at the exit is 100 kPa.
3. Display results

The answers are: (A) reversible work=615.8 kJ/kg, and (B) irreversible work=523.4 kJ/kg as shown in Figure E7.2.1a and Figure E7.2.1b. It is demonstrated that the reversible adiabatic turbine work is larger than the irreversible adiabatic turbine work.

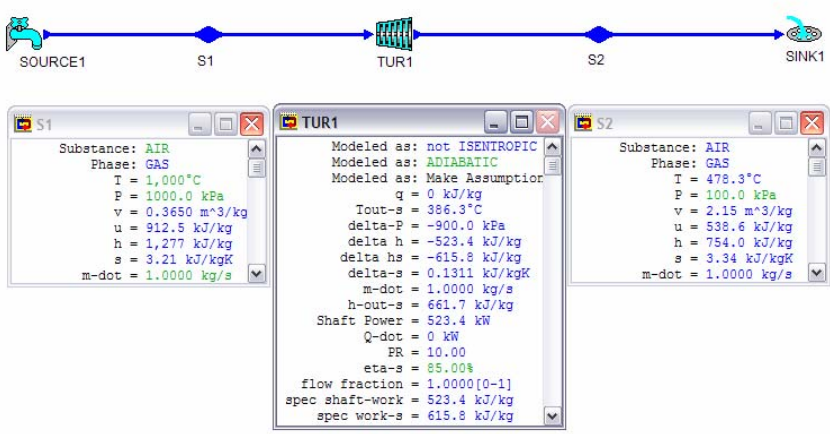

Figure E7.2.1a. Reversible work

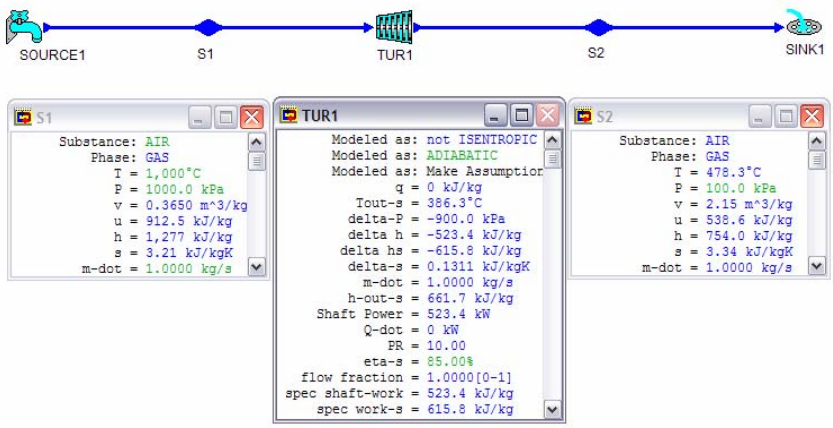

Figure E7.2.1b. Irreversible work

Homework 7.2. Reversible and Irreversible Work

1. What is reversible work of a process?
2. Does reversible work equal to irreversible work for a process connecting the same end states?
3. Consider a process that involves no irreversibility. Does the irreversible work equal to the reversible work?
4. An air stream at 500EC and 500 kPa with mass flow rate of 1 kg/s enters an adiabatic turbine. The stream leaves the turbine at 100 kPa. Determine the work of the turbine if the turbine is (A) reversible, and (B) irreversible with an efficiency of 82%.
   ANSWER: (A) 286 kJ/kg, (B) 234.5 kJ/kg.
5. A carbon dioxide stream at 500EC and 500 kPa with mass flow rate of 0.2 kg/s enters an adiabatic turbine. The gas leaves the turbine at 100 kPa. Determine the work of the turbine if the turbine is (A) reversible, and (B) irreversible with an efficiency of 80%.
   ANSWER: (A) 197.2 kJ/kg, (B) 161.7 kJ/kg.
6. A helium stream at 500EC and 500 kPa with mass flow rate of 0.2 kg/s enters an adiabatic turbine. The gas leaves the turbine at 100 kPa. Determine the work of the turbine if the turbine is (A) reversible, and (B) irreversible with an efficiency of 80%.
   ANSWER: (A) 1904 kJ/kg, (B) 1561 kJ/kg.
7. A helium stream at 1000EF and 100 psia with mass flow rate of 0.2 lbm/s enters an adiabatic turbine. The gas leaves the turbine at 14.7 psia. Determine the specific work of the turbine if the turbine is (A) reversible, and (B) irreversible with an efficiency of 80%.
   ANSWER: (A) 968.5 Btu/lbm, (B) 774.8 Btu/lbm.
8. An air stream at 1000EF and 100 psia with mass flow rate of 0.2 lbm/s enters an adiabatic turbine. The gas leaves the turbine at 14.7 psia. Determine the specific

work of the turbine if the turbine is (A) reversible, and (B) irreversible with an efficiency of 80%.
ANSWER: (A) 147.6 Btu/lbm, (B) 118.0 Btu/lbm.

7.3. REVERSIBLE WORK OF A CLOSED SYSTEM

Consider a closed system undergoing a change of state from an initial state 1 at T_1 and p_1 to a final state 2 at T_2 and p_2 by means of a reversible process 1-2. This reversible process 1-2 is equivalent to a reversible change of state that takes place along two separate reversible processes 1-A and A-2. Process 1-A is a reversible adiabatic process and process A-2 is a reversible isothermal process. Heat is exchanged between the system and its environment at T_0 and p_0. The two separate reversible processes 1-A and A-2 can be arranged in two ways. In both arrangements, the process involves a reversible adiabatic expansion to a pressure p_A and then reversible isothermal energy transfer that takes the system to state 2 at pressure p_2. The pressure p_A may be either less than p_2 or larger than p_2.

The total reversible work produced by the system between the initial state 1 to the final state 2, W_{12}, is the sum of the reversible work produced by the two separate reversible processes 1-A and A-2. According to the First law, we have

$$W_{1A}=E_1-E_A+Q_{1A}=E_1-E_A \tag{7.3.1}$$

$$W_{A2}=E_A-E_2+Q_{A2}=E_A-E_2-T_o(S_1-S_2) \tag{7.3.2}$$

and

$$W_{12}=W_{1A}+W_{A2}=E_1-E_2-T_o(S_1-S_2) \tag{7.3.3}$$

Neglecting kinetic energy and potential energy, Eq. (7.4.3) becomes

$$W_{12}=U_1-U_2-T_o(S_1-S_2) \tag{7.3.4}$$

The reversible work per unit mass is

$$w_{12}=u_1-u_2-T_o(s_1-s_2) \tag{7.3.5}$$

Example 7.3.1.

Find the reversible work that can be obtained from 1 kg of air at 1573 K and 4000 kPa to 200 kPa. The air is contained in an isentropic cylinder and piston device. The environment temperature is at 300 K.

To solve this problem by CyclePad, we take the following steps:

1. Build
   (A) Take a begin, an expansion device, and an end from the closed-system inventory shop and connect them.

(B) Switch to analysis mode.

2. Analysis
   (A) Input the given information: (a) working fluids is air, (b) mass, pressure and temperature of the air at initial state 1 are 1 kg, 4000 kPa and 1573 K, (c) pressure of the air at the final state 2 is 200 kPa.
   (B) Assume the expansion device is adiabatic and isentropic.
3. Display results

Display the states and the expansion device results. The results are: u_1=1128 kJ/kg,, s_1=3.03 kJ/(K)kg, u_2=479.1 kJ/kg, s_2=3.03 kJ/(K)kg, and w_{12}=648.4 kJ/kg. The reversible work of the air can also be calculated as $w_{12}=u_1-u_2-T_o(s_1-s_2)$=1128-479.1-300(3.03-3.03)=648.9 kJ/kg.

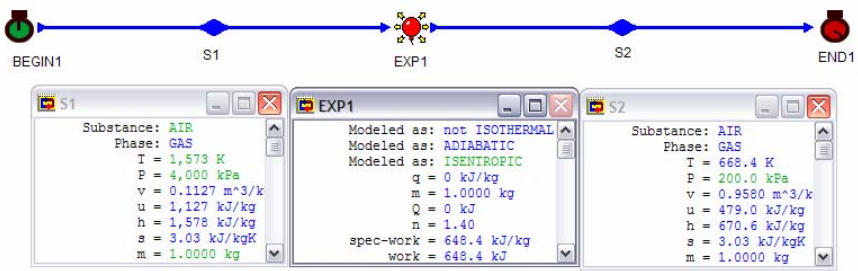

Figure E7.3.1. Reversible work of a closed system

Example 7.3.2.

Find the specific reversible work that can be obtained from an initial state of air at 400 K and 530 kPa to a final state of 150 kPa and 300 K. The environment temperature is at 298 K.

To solve this problem by CyclePad, we take the following steps:

1. Build
   (A) Take a begin, an expansion device, and an end from the closed-system inventory shop and connect them.
   (B) Switch to analysis mode.
2. Analysis
   (A) Input the given information: (a) working fluids is air, (b) mass, pressure and temperature of the air at initial state 1 are 1 kg, 530 kPa and 400 K, (c) pressure and temperature of the air at the final state 2 are 150 kPa and 300 K.
3. Display results

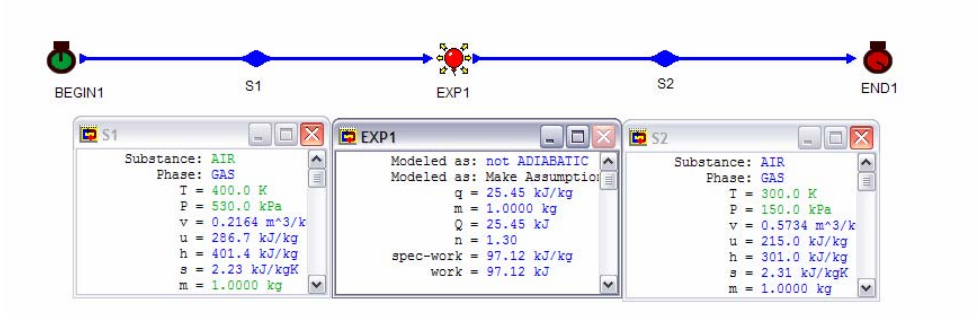

Figure E7.3.2. Reversible work of a closed system

Display the states and the expansion device results. The results are: u_1=286.7 kJ/kg,, s_1=2.23 kJ/(K)kg, u_2=215.0 kJ/kg, and s_2=2.31 kJ/(K)kg. The reversible work of the air can be calculated as $w_{12}=u_1-u_2-T_o(s_1-s_2)$=286.7-215-298(2.23-2.31)=95.54 kJ/kg.

Homework 7.3. Reversible Work of a Closed System

1. Write the general mathematical expression of reversible work for a closed system undergoing a change of state 1-2.
2. Does reversible work of a closed system depend on the surroundings of the system?
3. Find the specific reversible work developed when air expands in a piston-cylinder assembly from an initial state of 500 kPa and 500 K to a final state of 200 kPa. Neglect changes in potential and kinetic energies, and assume the environment temperature is at 300 K.
   ANSWER: 82.54 kJ/kg.
4. Find the specific reversible work developed when carbon dioxide expands in a piston-cylinder assembly from an initial state of 500 kPa and 500 K to a final state of 200 kPa. Neglect changes in potential and kinetic energies, and assume the environment temperature is at 300 K.
   ANSWER: 60.63 kJ/kg.
5. Find the specific reversible work that can be obtained from an initial state of carbon dioxide at 500 K and 600 kPa to a final state of 200 kPa and 350 K. The environment temperature is at 300 K.
   ANSWER: 71.28 kJ.
6. Find the reversible work that can be obtained from 0.21 kg of helium at 1500 K and 3000 kPa to 200 kPa. The gas is contained in an isentropic cylinder and piston device. The environment temperature is at 300 K.
   ANSWER: 647.0 kJ.
7. Find the reversible work that can be obtained from 0.05 kg of air at 2000 K and 3000 kPa to 400 kPa. The gas is contained in an isentropic cylinder and piston device. The environment temperature is at 300 K.
   ANSWER: 31.37 kJ.

8. Find the reversible work that can be obtained from 0.05 kg of steam at 600 K and 600 kPa to 20 kPa. The gas is contained in an isentropic cylinder and piston device. The environment temperature is at 300 K.
   ANSWER: 42.74 kJ.

7.4. REVERSIBLE WORK OF AN OPEN SYSTEM

An open system permits mass and energy interactions between the system and its surroundings. Assume kinetic energy and potential energy are negligible. From the first law, the reversible work done on the open system in a differential expression is

$$*W_{rev}=*Q-dU+h_i dm_i-h_e dm_e \tag{7.4.1}$$

Although the temperature may vary at different locations within the open system, heat is transferred only at locations where the open system and the environment are at the same temperature, thereby reversible heat interaction can be achieved. When reversible heat transfer is not feasible and there is a difference in temperature between the system and the environment, heat transfer can take place through a reversible heat engine or a reversible heat pump. The energy transfer as work from or to the Carnot heat engine or heat pump must be deducted from the reversible work of the system. The reversible heat interaction in a differential expression is

$$*Q_o=T_o dS_o \tag{7.4.2}$$

Where T_o is the temperature of the environment, and dS_o is the entropy change of the environment.

From the Second law, the entropy change of the open system for reversible condition in a differential expression is

$$dS=*Q_o/T_o-s_i dm_i+s_e dm_e \tag{7.4.3}$$

or the reversible heat interaction is

$$*Q_o=T_o(dS+s_i dm_i-s_e dm_e) \tag{7.4.4}$$

Substituting $*Q$ into the First law, the reversible work done on the open system in a differential expression becomes

$$*W_{rev}=T_o(dS-s_i dm_i+s_e dm_e)-dU+h_i dm_i-h_e dm_e \tag{7.4.5}$$

Rearranging terms, this equation can be rewritten as

$$*W_{rev}=-(h_e-T_o s_e)dm_e+(h_i-T_o s_i)dm_i-d(U-T_o S) \tag{7.4.6}$$

Equation (7.4.6) gives the reversible work done on the open system as a function of the inlet (i) and exit (e) sections fluid properties, the initial (1) and final (2) states of the open system, and the temperature of the environment in a differential expression.

If the properties are uniform at the inlet and exit sections, and within the system at any instant time, integration of Eq. (7.4.6) gives

$$W_{rev}=-(h_e-T_os_e)m_e+(h_i-T_os_i)m_i-m_2(u_2-T_os_2)+m_1(u_1-T_os_1) \quad (7.4.7)$$

Hemework 7.4. Reversible Work of an Open System

1. Write the general mathematical expression of reversible work for an open system undergoing a flow process.
2. Does reversible work of an open system depend on the surroundings of the system?

7.5. Reversible Work of an Open System in a Steady-State Flow Process

Assuming kinetic energy and potential energy are negligible, properties are uniform at the inlet and exit sections, and for steady state and steady flow, $m=m_1=m_2$, $s_1=s_2$, and $m_1u_1=m_2u_2$. The reversible work in Eq. (7.4.7) is reduced to

$$-W_{rev}=(h_e-T_os_e)m-(h_i-T_os_i)m \quad (7.5.1)$$

The reversible work per unit mass of an open system in a steady-state flow process is

$$-w=h_e-h_i-T_o(s_e-s_i) \quad (7.5.2)$$

Example 7.5.1.

An air stream at 310 K and 100 kPa with mass flow rate of 0.4167 kg/s enters an adiabatic compressor. The stream leaves the compressor at 380 K and 200 kPa. Determine the minimum work and power of the compressor. The environment temperature is at 293 K.

To solve this problem by CyclePad, we take the following steps:

1. Build
   (A) Take a source, a compressor, and a sink from the open-system inventory shop and connect them.
   (B) Switch to analysis mode.
2. Analysis
   (A) Assume the compressor is adiabatic and reversible (with efficiency of 100%) in case (A), and the turbine is adiabatic and irreversible (with efficiency of 85%) in case (B).

(B) Input the given information: (a) working fluids is air, (b) mass flow rate, pressure and temperature of the air at the inlet are 1 kg/s, 1000 kPa and 1000EC, (c) pressure of the air at the exit is 100 kPa.

3. Display results

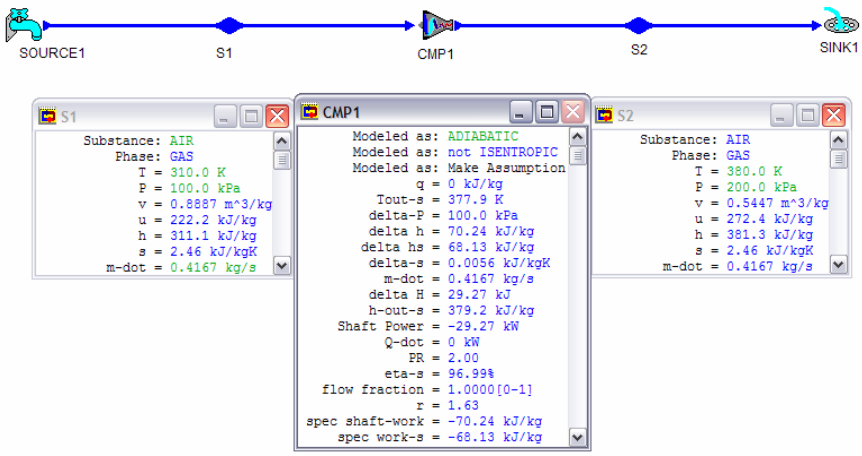

Figure E7.5.1. Reversible work of a compressor

Display the compressor results. The answers are: (A) reversible work=$(h_i-h_e)-T_o(s_i-s_e)$=(311.1- 381.3)-293(2.46-2.46)=-70.2 kJ/kg, and the minimum power is 0.4167(-70.2)=-29.25 kW.

Example 7.5.2.

Steam with a mass flow rate of 0.1 lbm/s is expanded from 1000 psia and 1100ER to 10 psia in an adiabatic turbine. The quality of the exit steam is measured at 85%. Determine the actual specific work and maximum possible specific work produced by the turbine. The environment temperature is at 520ER.

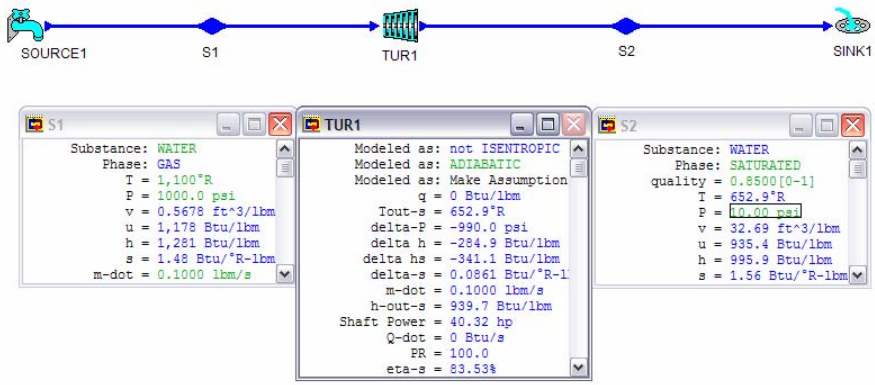

Figure E7.5.2. Reversible work of a turbine

To solve this problem by CyclePad, we take the following steps:

1. Build
   (A) Take a source, a turbine, and a sink from the open-system inventory shop and connect them.
   (B) Switch to analysis mode.
2. Analysis
   (A) Assume the turbine is adiabatic.
   (B) Input the given information: (a) working fluids is water, (b) mass flow rate, pressure and temperature of the water at the inlet are 0.1 lbm/s, 1000 psia and 1100ER, (c) pressure and quality of the water at the exit are 10 psia and 0.85.
3. Display results

Display the compressor results. The answers are: (A) actual specific work=(h_i-h_e)=284.9 Btu/lbm, and reversible work=(h_i-h_e)-T_o(s_i-s_e)=(1281- 995.9)-520(1.48-1.56)=326.5 Btu/lbm.

Homework 7.5. Reversible Work of an Open System in a Steady-State Flow Process

1. Write the general mathematical expression of reversible work for an open system in a steady-state steady flow process 1-2.
2. An air stream at 310 K and 100 kPa with mass flow rate of 0.1 kg/s enters an adiabatic compressor. The stream leaves the compressor at 400 K and 200 kPa. Determine thespecigic actual work and specific minimum work of the compressor. The environment temperature is at 298 K.
   ANSWER: -90.31 kJ/kg, -75.4 kJ/kg.
3. A carbon dioxide stream at 310 K and 100 kPa with mass flow rate of 0.1 kg/s enters an adiabatic compressor. The stream leaves the compressor at 400 K and 200 kPa.

Determine thespecigic actual work and specific minimum work of the compressor. The environment temperature is at 298 K.
ANSWER: -51.76 kJ/kg, -75.63 kJ/kg.

4. Steam with a mass flow rate of 0.5 lbm/s is expanded from 1000 psia and 1100ER to 5 psia in an adiabatic turbine. The quality of the exit steam is measured at 85%. Determine the actual specific work and maximum possible specific work produced by the turbine. The environment temperature is at 520ER.
ANSWER: 300.2 Btu/lbm, 362.8 Btu/lbm.
5. Steam with a mass flow rate of 1 lbm/s is expanded from 1000 psia and 1200ER to 10 psia in an adiabatic turbine. The quality of the exit steam is measured at 85%. Determine the actual specific work and maximum possible specific work produced by the turbine. The environment temperature is at 520ER.
ANSWER: 355.0 Btu/lbm, 365.5 Btu/lbm.

7.6. IRREVERSIBILITY OF A CLOSED SYSTEM

Irreversible processes result in lost opportunity for developing work because maximum reversible work can be only produced if a system interacts reversibly with the environment. The actual work done on a system when it has the same change of state is always more than the idealized reversible work. Irreversibility are caused by friction, heat transfer through a finite temperature difference, free expansion, mixing, chemical reaction, etc. Irreversibility, I, is the difference between the idealized reversible and the actual work work for the same change of state so that

$$I=W_{revt}-W_{act} \tag{7.6.1}$$

Consider a closed system undergoing a change of state from an initial state 1 with S_1 and U_1 to a final state 2 with S_2 and U_2 by means of a process 1-2. The system receives an amount of heat Q from the environment at T_o and perform an amount of work W. Neglecting the kinetic energy and potential energy, the First law is

$$W=U_1-U_2+Q \tag{7.6.2}$$

Substituting Eq. (7.4.4) into Eq. (7.6.1) and Eq. (7.6.2) gives

$$I=T_o(S_2-S_1)-Q \tag{7.6.3}$$

If the system receives heat from its environment at temperature T_o, the entropy change of the environment, $)S_o$, is

$$)S_o=-Q/T_o \tag{7.6.4}$$

The irreversibility is

$$I=T_o(S_2-S_1)+T_o()S_o)=T_o[()S_o)+(S_2-S_1)]=T_o()S_{universe}) \quad (7.6.3)$$

Since $)S_{universe}$ is non-negative, the irreversibility can not be negative. The irreversibility is zero for a reversible process and positive for an irreversible process.

Irreversibility has several valuable interpretations. It is sometimes called "energy made unavailable" because it is the increase in unavailable energy caused by a process. It is also the decrease in available energy or the decrease in exergy, sometimes called exergy loss. Irreversibility has also been called degradation, because it is the amount of energy degraded from the valuable available form to the less valuable unavailable form.

Example 7.6.1.

A rigid tank contains 1.2 kg of air at 300 K and 100 kPa. The temperature of the gas is raised to 320 K by adding work from a paddle wheel. Determine the reversible work and the irreversibility of this process. The environment temperature is at 298 K.

To solve this problem by CyclePad, we take the following steps:

1. Build
   (A) Take a begin, a heating device, and an end from the closed-system inventory shop and connect them.
   (B) Switch to analysis mode.
2. Analysis
   (A) Input the given information: (a) working fluids is air, (b) mass, pressure and temperature of the air at initial state 1 are 1.2 kg, 100 kPa and 300 K, (c) volume and temperature of the air at the final state 2 are 0.8601 m^3/kg and 320 K.
3. Display results

Display the states and the results. The results are: U_1=258 kJ/kg,, S_1=2.91 kJ/(K), U_2=275.2 kJ/kg, and S_2=2.96 kJ/(K)kg. The reversible work of the air can be calculated as $W_{rev}=U_1-U_2-T_o(S_1-S_2)$=258-275.2-298(2.91-2.96)=-2.3 kJ. The actual work is $W_{act}=U_1-U_2-Q$=258-275.2-0=-17.2 kJ. The irreversibility is $I=W_{rev}-W_{act}$=-2.3-(-17.2)=14.9 kJ.

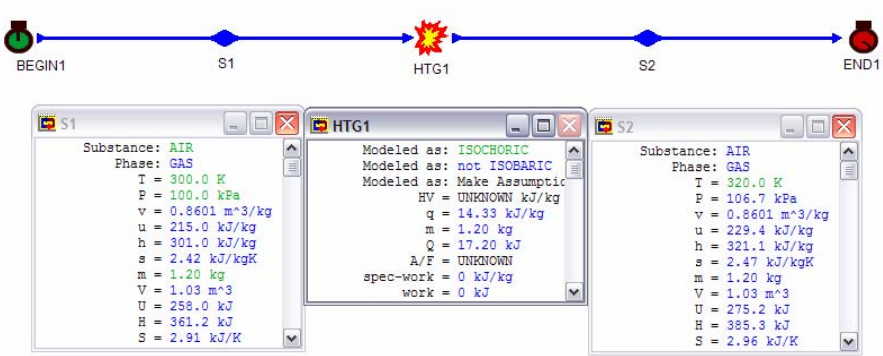

Figure E7.6.1. Irreversibility of a closed system

Homework7.6. Irreversibility of a Closed System

1. What is the difference between the reversible work and the actual work for the same change of state?
2. Can irreversibility be negative?
3. A rigid tank contains 1 kg of helium at 300 K and 100 kPa. The temperature of the gas is raised to 320 K by adding work from a paddle wheel. Determine the specific reversible work and the specific irreversibility of this process. The environment temperature is at 298 K.
   ANSWER: -124 kJ/kg, -2.4 kJ/kg.

7.7. IRREVERSIBILITY OF AN OPEN SYSTEM

An open system permits mass and energy interactions between the system and its surroundings. Assume kinetic energy and potential energy are negligible. In a similar way, an expression in an open system can be derived.

The irreversibility of an open system is

$$I=T_o[(S_2-S_1)+s_im_i-s_em_e]-Q \qquad (7.7.1)$$

Assuming kinetic energy and potential energy are negligible, properties are uniform at the inlet and exit sections, and for steady state and steady flow, $m=m_1=m_2$, and $s_1=s_2$. The irreversibility in Eq. (7.7.1) is reduced to

$$I=T_o[s_em_e-s_im_i]-Q =T_o[()S_{system})+()S_{environment})]=T_o()S_{universe}) \qquad (7.7.2)$$

The rate of irreversibility of the system is

$$Idot=T_o[s_emdot_e-s_imdot_i]-Qdot \qquad (7.7.3)$$

It is seen from Eq. (7.6.3) and Eq. (7.7.2) that the same expression for irreversibility applied to both closed system and open system.

Example 7.7.1.

A helium stream at 200EC and 500 kPa with mass flow rate of 0.6 kg/s enters a steady-state steady-flow turbine. The stream leaves the turbine at 50EC and 100 kPa. The turbine delivers a power of 100 kW. Determine the rate of the heat transfer and the rate of irreversibility of the process. The environment temperature is at 290 K.

To solve this problem by CyclePad, we take the following steps:

1. Build
   (A) Take a source, a turbine, and a sink from the open-system inventory shop and connect them.

(B) Switch to analysis mode.

2. Analysis

(A) Input the given information: (a) working fluids is helium, (b) mass flow rate, pressure and temperature of the air at the inlet are 0.6 kg/s, 500 kPa and 200EC, (c) pressure and temperature of the air at the exit are 100 kPa and 50EC, and (d) shaft power=100 kW.

3. Display results

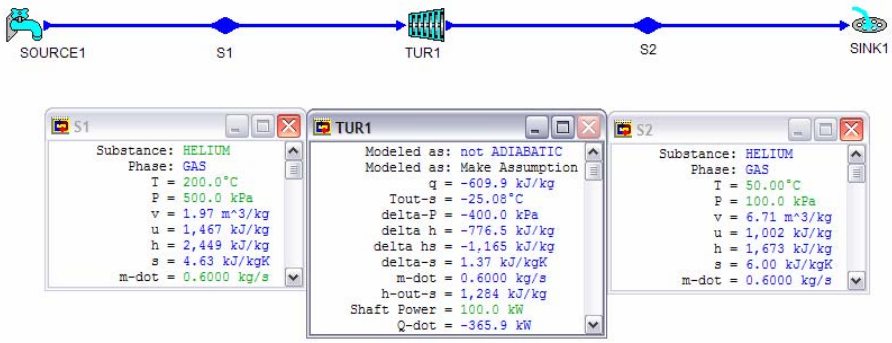

Figure E7.7.1. Irreversibility of a turbine

Display the turbine results. The answers are: (A) rate of heat transfer=-365.9 kW, and rate of irreversibility=Idot=$T_o[s_e mdot_e - s_i mdot_i]$-Qdot=290(0.6)(6.0-4.63)-(-365.9)=604.3 kW.

Example 7.7.2.

A hot water stream at 135EC and 100 kPa with mass flow rate of 0.06 kg/s enters an adiabatic steady-state steady-flow heat exchanger and leaves the heat exchanger at 80EC and 100 kPa. A cold water stream at 25EC and 100 kPa enters the heat exchanger and leaves the heat exchanger turbine at 105EC and 100 kPa. Determine the rate of irreversibility of the process. The environment temperature is at 298 K.

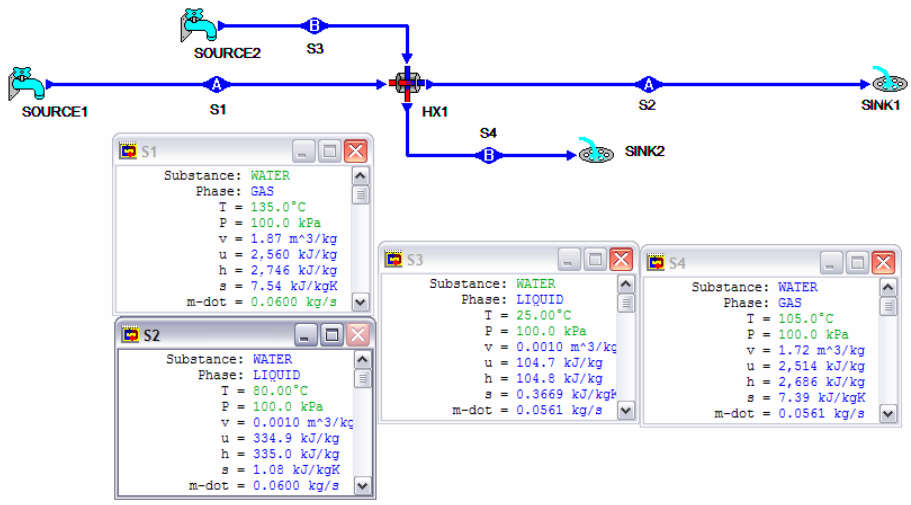

Figure E7.7.2. Irreversibility of a heat exchanger

To solve this problem by CyclePad, we take the following steps:

1. Build
   (A) Take two sources, a heat exchanger, and two sinks from the open-system inventory shop and connect them.
   (B) Switch to analysis mode.
2. Analysis
   (A) Input the given information: (a) working fluids are water, (b) mass flow rate, pressure and temperature of the hot water stream at the inlet are 0.06 kg/s, 100 kPa and 135EC, (c) pressure and temperature of the hot water stream at the exit are 100 kPa and 80EC, (d) pressure and temperature of the cold water stream at the inlet are 100 kPa and 25EC, and (e) pressure and temperature of the cold water stream at the exit are 100 kPa and 105EC.
3. Display results

Display the results. The answers are: (A) mass rate flow of cold water stream=0.0561 kg/s, and rate of irreversibility= $Idot=T_o[s_e mdot_e - s_i mdot_i]-Qdot=298\{[(0.0561(7.39)+0.06(1.08)]-[0.0561(0.3669)+0.06(7.54)]-0=1.906$ kW.

Example 7.7.3.

Saturated liquid ammonia at 200 kPa with mass flow rate of 0.01 kg/s enters an adiabatic steady-state steady-flow expansion valve and leaves at 100 kPa. Determine the rate of irreversibility of the process. The environment temperature is at 298 K.

To solve this problem by CyclePad, we take the following steps:

1. Build
   (A) Take a source, a valve, and a sink from the open-system inventory shop and connect them.
   (B) Switch to analysis mode.
2. Analysis
   (A) Input the given information: (a) working fluid is ammonia, (b) mass flow rate, pressure and quality of ammonia at the inlet are 0.01 kg/s, 200 kPa and 0, (c) pressure of the ammonia at the exit is 100 kPa.
3. Display results
   s_e=0.3945 kJ/[K(kg)] and s_i=0.3945 kJ/[K(kg)].

The answers is: rate of irreversibility=Idot=$T_o[s_e mdot_e - s_i mdot_i]$-Qdot=298(0.01(0.3945-0.3858)=0.02593 kW.

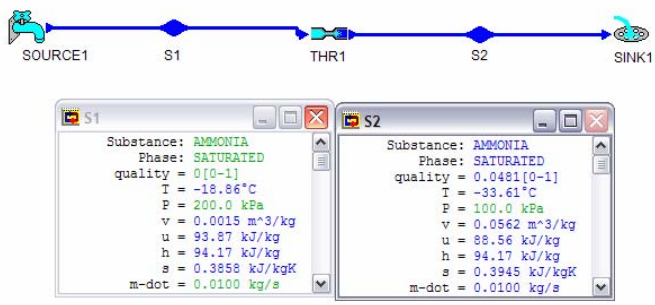

Figure E7.7.3. Irreversibility of a valve

Homework7.7. Irreversibility of an Open System

1. Does the expression for irreversibility for a closed system different from that of an open system?
2. An air stream at 150EC and 400 kPa with mass flow rate of 0.6 kg/s enters a steady-state steady-flow turbine. The stream leaves the turbine at 60EC and 100 kPa.The turbine delivers a power of 45 kW. Determine the rate of the heat transfer and the rate of irreversibility of the process. The environment temperature is at 283 K.
   ANSWER: -9.18 kW, -17.99 kW.
3. A carbon dioxide stream at 150EC and 400 kPa with mass flow rate of 0.6 kg/s enters a steady-state steady-flow turbine. The stream leaves the turbine at 60EC and 100 kPa.The turbine delivers a power of 45 kW. Determine the rate of the heat transfer and the rate of irreversibility of the process. The environment temperature is at 283 K.
   ANSWER: -0.3789 kW, -9.809 kW.
4. A hot water stream at 135EC and 150 kPa with mass flow rate of 0.1 kg/s enters an adiabatic steady-state steady-flow heat exchanger and leaves the heat exchanger turbine at 70EC and 150 kPa. A cold water stream at 30EC and 150 kPa enters the

heat exchanger and leaves the heat exchanger turbine at 95EC and 150 kPa. Determine the rate of irreversibility of the process. The environment temperature is at 298 K.
ANSWER: -26.82 kW.

5. Saturated liquid ammonia at 30 psia with mass flow rate of 0.01 lbm/s enters an adiabatic steady-state steady-flow expansion valve and leaves at 14.7 psia. Determine the rate of irreversibility of the process. The environment temperature is at 500ER.
ANSWER: 0.011 Btu/s.
6. Saturated liquid ammonia at 40 psia with mass flow rate of 0.01 lbm/s enters an adiabatic steady-state steady-flow expansion valve and leaves at 14.7 psia. Determine the rate of irreversibility of the process. The environment temperature is at 500ER.
ANSWER: 0.0225 Btu/s.
7. Saturated liquid R-134a at 40 psia with mass flow rate of 0.01 lbm/s enters an adiabatic steady-state steady-flow expansion valve and leaves at 14.7 psia. Determine the rate of irreversibility of the process. The environment temperature is at 500ER.
ANSWER: 0.008 Btu/s.
8. Saturated liquid R-22 at 40 psia with mass flow rate of 0.01 lbm/s enters an adiabatic steady-state steady-flow expansion valve and leaves at 14.7 psia. Determine the rate of irreversibility of the process. The environment temperature is at 500ER.
ANSWER: 0.007 Btu/s.

7.8. EXERGY (AVAILABILITY)

A system has been defined as either a fix mass or a fix region within prescribed boundaries, which separate the system from its surroundings. The surroundings is everything outside the system boundary. For almost all practical thermodynamic systems a part of the surroundings is the atmosphere. In other words, the atmosphere is a part of the surroundings. The atmosphere is so large in comparison with the system that its pressure and temperature are not changed by any change of the state of the system. Therefore, intensive properties of the other parts of the surroundings may vary, but the pressure and temperature of the atmosphere remain constant. The standard atmosphere at 1 atmospheric pressure (101.3 kPa or 14.7 psia) and temperature of 25EC (77EF) is usually chosen as the reference datum.

It is very desirable to have a property to enable us to determine the useful work potential of a given amount of energy of a thermodynamic system at a specified state. Some energy of the system at the state is available to us for the performance work, and some energy is unavailable. The property is called *exergy*, *available energy* or *availability*.

Exergy is synonymous with maximum useful work. Exergy is the work potential of a system in a specified environment and represents the maximum amount of useful work that can be obtained as the system is brought to equilibrium with the environment. Thus, the value of exergy depends on the state of the system and the state of the environment. The amount of useful work of a system that is in equilibrium with the environment is zero and therefore the exergy of the system at this specified state is also zero. In this book we will limit exergy definition to the effect of environment pressure and temperature only. The effect of the potential energy and kinetic energy of the environment to exergy of a system are neglected.

Homework 7.8. Exergy (Availability)

1. What is exergy?
2. Does exergy of a system depend on the environment temperature and pressure?
3. Does energy of a system depend on the environment temperature and pressure?
4. Energy is a measure of quantity. Is exergy a measure of quantity alone, or both quantity and quality?

7.9. EXERGY OF A HEAT RESERVOIR

Consider a heat reservoir at temperature T_H and its environment at temperature T_o as shown in Figure 7.9.1. If the heat reservoir is simply brought into thermal contact with the environment, heat will be transferred because of the temperature difference, but no work will be produced. Work can be obtained by place a heat engine between the heat reservoir acting as a heat source and the environment acting as a heat sink. Heat (Q_H) is transferred from the heat reservoir to a heat engine, and heat (Q_o) is transferred from the heat engine to the environment from the heat engine. Both the reservoir and the environment are large enough so that their temperatures do not change with heat transfer Q_H and Q_o.

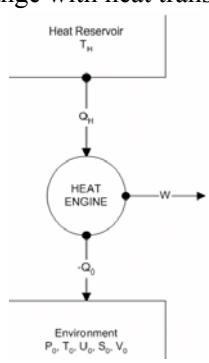

Figure 7.9.1.Exergy of a heat reservoir

The entropy change of the source ()S_H), the entropy change of the heat engine ()S_{engine}), and the entropy change of the environment ()S_o) are

$$)S_H=-Q_H/T_H \,, \tag{7.9.1}$$

$$)S_{engine}=0 \,, \tag{7.9.2}$$

and

$$)S_o=Q_o/T_o \,, \tag{7.9.3}$$

From the Second law of thermodynamics, the total entropy change of the universe ()S_U) is

$$)S_U=)S_H+)S_{engine}+)S_o>0, \text{ for irreversible case} \quad (7.9.4)$$

and

$$)S_U=)S_H+)S_{engine}+)S_o=0, \text{ for reversible case} \quad (7.9.5)$$

From the First law of thermodynamics, the work produced by the heat engine (W) is

$$W=Q_H-Q_o. \quad (7.9.6)$$

Therefore

$$W=Q_H(1-T_o/T_H), \text{ for reversible case} \quad (7.9.7)$$

and

$$W<Q_H(1-T_o/T_H), \text{ for irreversible case} \quad (7.9.8)$$

The maximum possible useful work which is exergy, M is therefore

$$M=Q_H(1-T_o/T_H). \quad (7.9.9)$$

for this situation. Note that exergy of a heat reservoir at a high temperature is superior to exergy of a heat reservoir at a low temperature with the same ambient condition.

For the situation in which the heat source is not infinite, its temperature will change and T_H must be considered as an instantaneous value. Then the differential change of the exergy of the source is

$$dM=*Q_H(1-T_o/T_H). \quad (7.9.10)$$

where $*Q_H$ is an inexact differential which is related to a process, and dM is an exact differential which is an extensive property. Thus exergy is a property of the system-environment combination and not of the system alone.

In performing work, a finite source undergoes processes before it finally reaches mutual equilibrium with the environment. This state is called dead state. At this state, the source is incapable of producing any further work, and the value of exergy is zero. Note that work can always be produced when there is a difference in temperature between the source and the environment.

Example 7.9.1.

A dry geothermal well (hot rock) at 177EC is discovered. The local surrounding air temperature is at 17EC. Water is injected into the well to produce steam which drives a heat engine. The heat input to the heat engine is 10000 kJ. (A) What is the initial exergy of the geothermal well? (B) What is the exergy of the geothermal well one year later if the well

temperature is dropped to 167EC with the heat input to the heat engine dropped to 9000 kJ? (C) What is the exergy of the geothermal well two years later if the well temperature is dropped to 157EC with the heat input to the heat engine dropped to 7000 kJ?

Solution: Equation (7.9.9) gives

(A) M=10000[1-(17+273)/(177+273)]=3556 kJ.
(B) M=9000[1-(17+273)/(167+273)]=3068 kJ.
(C) M=7000[1-(17+273)/(157+273)]=2279 kJ.

Homework7.9. Exergy of a Heat Reservoir

1. Is exergy a state property? Is exergy a variable at a specified state?
2. Does exergy of a system change when the state of the system changes?
3. If heat is transferred across a finite temperature difference directly from a heat source at T_H to an environment at T_o without operating a heat engine, what is the work? Is this process a reversible one? What is the entropy change of the universe?
4. Does energy of an infinitely large heat reservoir change? Why?
5. Does exergy of an infinitely large heat reservoir change? Why?
6. Does exergy of a finitely thermal system change? Why?
7. What is a dead state?
8. What is the heat interaction of a system at dead state with its surroundings?
9. What is the exergy of a system at equilibrium with its surroundings?
10. Does exergy represent the amount of work that a real work-producing device delivers?
11. Does exergy equal to the amount of work that a real work-producing device delivers?
12. Energy and entropy are properties of the system alone. Is exergy a property of the system alone?
13. Does exergy of a system depend on the temperature of the environment?
14. Can the exergy value of a heat source be negative?
15. Can the exergy value of a heat sink be negative?
16. Is exergy of a heat reservoir different in different environments?
17. Consider two geothermal wells whose energy contents are the same. Are the exergies of the two wells the same at different ambient temperature?
18. Can the energy of a system with mass ever be zero? Hint: According to Einstein, $E=mc^2$, where c is the speed of light.
19. Can the exergy of a system with mass ever be zero?

7.10. EXERGY AND EXERGY CHANGE OF A CLOSED SYSTEM

Consider a closed system at state 1 with temperature T_1, internal energy U_1, entropy S_1, and volume V_1 with its environment at temperature T_o and pressure at p_o as shown in Figure 7.10.1. From Eq. (7.3.4), the maximum useful work that can be performed by the system indicates the energy availability of the system is

$$W_{reversible}=E_1-E_0-T_o(S_1-S_0)=U_1-U_0-T_o(S_1-S_0) \quad (7.10.1)$$

The useful reversible work of the system is the reversible work minus the work interaction with the environment as the system expands or contracts.

$$W_{useful\ reversible}=W_{reversible}-W_{environment} \quad (7.10.2)$$

The work interaction with the environment at a pressure p_o is

$$W_{environment}=-p_o(V_1-V_0) \quad (7.10.3)$$

Substituting $W_{reversible}$ and $W_{environment}$ into Eq. (7.6.2) and rearranging gives

$$W_{useful\ reversible}= M_1=(U_1+p_oV_1-T_o\ S_1)-(U_0+p_oV_0-T_o\ S_0) \quad (7.10.4)$$

Define $M=(U+p_oV-T_o\ S)-(U_0+p_oV_0-T_o\ S_0)$. M is called the exergy or availability for a closed system. Then Eq. (7.10.4) becomes

$$W_{useful\ reversible}= M_1- M_0 \quad (7.10.5)$$

The useful reversible work per unit mass is equal to the specific change of exergy.

$$w_{useful\ reversible}=N_1-N_0 \quad (7.10.6)$$

Exergy is a property which can be viewed as the useful work potential of an amount of energy at a specified state. Notice that exergy is not a property of the system alone; its value depends on p_o and T_o as well as on the properties of the system. It is a composite property that depends on the state of both the system and the environment.

The specific exergy change of a closed system during a process 1-2 is the difference between the final and initial specific exergies of the system.

$$)N=N_2-N_1=(u_2+p_ov_2-T_o\ s_2)- (u_1+p_ov_1-T_o\ s_1) \quad (7.10.7)$$

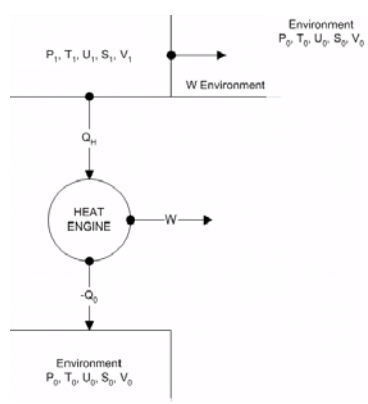

Figure 7.10.1.Exergy and exergy change of a closed system

Example 7.10.1.

What is the specific exergy of of air at 1000 K and 100 kPa? The ambient state is at 298 K and 100 kPa.

To solve this problem by CyclePad, we take the following steps:

1. Build
   (A) Take two begins and two ends from the closed-system inventory shop and connect them as shown in Figure E7.10.1. State 2 is the ambient state.
   (B) Switch to analysis mode.
2. Analysis
   (A) Input the given information: (a) working fluid is air, mass, pressure and temperature of the air at state 1 are 1 kg, 100 kPa and 1000 K, and (b) temperature and pressure are 298 K and 100 kPa at state 2 (environment).
3. Display results

Display the states and the results. The results are: u_1=716.7 kJ/kg, v_1=2.87 m^3/kg, s_1=3.63 kJ/(K)kg, u_2=213.6 kJ/kg, v_2=0.8543 m^3/kg, and s_2=2.42 kJ/(K)kg.

The specific exergy of the air at the state is

$N_1=(u_1+p_ov_1-T_os_1)-(u_0+p_ov_0-T_os_0)$=[716.7+100(2.87)-298(3.63)]-[213.6+100(0.8543)-290(2.42)]=344.1 kJ/kg.

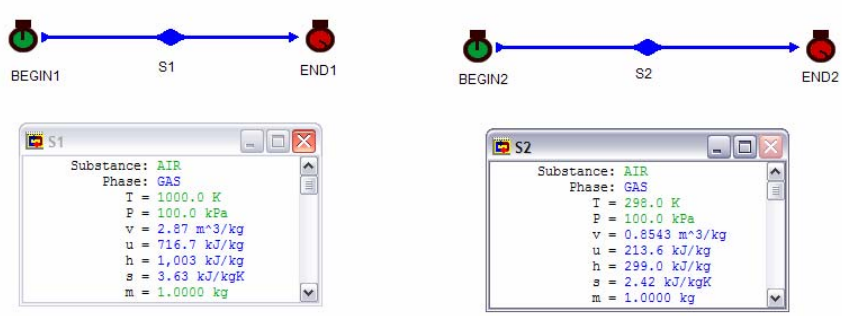

Figure E7.10.1. Exergy of a closed air system

Example 7.10.2.

A piston-cylinder device contains 0.01 kg of air at 330K. The air is maintained at a constant pressure of 200 kPa. Heat is added until the volume is doubled. The surrounding air temperature and pressure are 290 K and 100 kPa. Find the specific exergy of the air at the initial state and at the final state. Find the specific exergy change and exergy change of the air.

To solve this problem by CyclePad, we take the following steps:

1. Build
   (A) Take a begin, an expansion device, and an end from the closed-system inventory shop and connect them. Take another begin and another end from the closed-system inventory shop and connect them. State 3 is the environment state.
   (B) Switch to analysis mode.
2. Analysis
   (A) Input the given information: (a) working fluids is air, (b) mass, pressure and temperature of the air at initial state 1 are 0.01 kg, 200 kPa and 330 K, (c) volume and pressure of the air at the final state 2 are 0.9466 m^3/kg and 200 kPa; (d) temperature and pressure are 290 K and 100 kPa at state 3 (environment).
3. Display results
4.

Display the states and the results. The results are: u_1=236.5 kJ/kg, v_1=0.473 m^3/kg, s_1=2.32 kJ/(K)kg, u_2=473.3 kJ/kg, v_2=0.9466 m^3/kg, and s_2=3.02 kJ/(K)kg, u_3=207.9 kJ/kg, v_3=0.8314 m^3/kg, and s_3=2.39 kJ/(K)kg.

The specific exergy of the air at the initial state and at the final state are:

$N_1=(u_1+p_ov_1-T_o\quad s_1)-(u_0+p_ov_0-T_os_0)$=[236.5+100(0.473)-290(2.32)]-[207.9+100(0.8314)-290(2.39)]=13.1 kJ/kg.

$N_2=(u_2+p_ov_2-T_os_2)-(u_0+p_ov_0-T_os_0)$=[473.3+100(0.9466)-290(3.02)]-[207.9+100(0.8314)-290(2.39)]=94.3 kJ/kg.

The specific exergy change and exergy change of the air are:

)$N=N_2-N_1=(u_2+p_ov_2-T_os_2)-(u_1+p_ov_1-T_os_1)$=[473.3+100(0.9466)-290(3.02)]-[236.5+100(0.473)-290(2.32)]=81.16 kJ/kg.

M_2-M_1=m()N)=0.01(81.16)=0.8116 kJ.

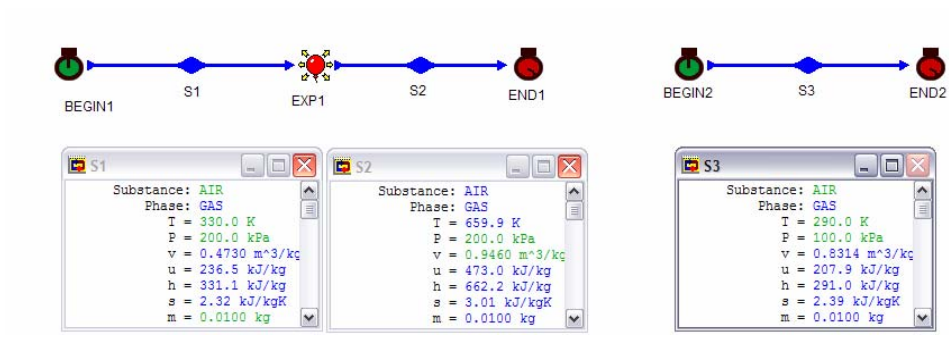

Figure E7.10.2. Exergy change of a closed air system

Example 7.10.3.

A device contains 1 lbm of saturated water initially at 400 psia is heated to 400 psia and 1000ER. The surrounding air temperature and pressure are 520ER and 14.7 psia. Find the specific exergy change of the water.

To solve this problem by CyclePad, we take the following steps:

1. Build
   (A) Take a begin, an expansion device, and an end from the closed-system inventory shop and connect them. Take another begin and another end from the closed-system inventory shop and connect them. State 3 is the environment state.
   (B) Switch to analysis mode.
2. Analysis
   (A) Input the given information: (a) working fluids is water, (b) mass, phase, quality and temperature of the air at initial state 1 are 1 lbm, saturated, 0, and 400 psia, (c) temperature and pressure of the water at the final state 2 are 400 psia and 1000ER; (d) air temperature and pressure are 290 K and 100 kPa at state 3 (environment).
3. Display results

Display the states and the results. The results are: u_1=422.7 Btu/lbm, v_1=0.0193 ft^3/lbm, s_1=0.6217 Btu/(ER)lbm, u_2=1169 Btu/lbm, v_2=1.54 ft^3/lbm, s_2=1.56 Btu/(ER)lbm, u_3=89.2 Btu/lbm, v_3=13.09 ft^3/lbm, and s_3=0.5687 Btu/(ER)lbm.

The exergy change of the water is:

$)N=N_2-N_1=(u_2+p_ov_2-T_os_2)-(u_1+p_ov_1-T_os_1)=[1169+14.7(1.54)/5.404-520(1.56)]-[422.7+14.7(0.0193)/5.404-520(0.6217)]=262.5$ Btu/lbm.

$M_2- M_1=m()N)=1(262.5)=262.5$ Btu/lbm.

Note that the conversion factor from psia(ft^3/lbm) to Btu/lbm is 5.404, i.e., 1 Btu=5.404 psia(ft^3).

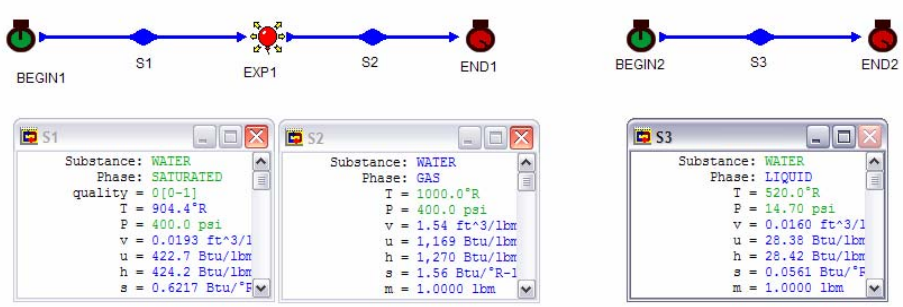

Figure E7.10.3. Exergy change of a closed water system

Homework7.10. Exergy and Exergy Change of a Closed System

1. How does reversible work differ from reversible useful work?
2. Under what condition does the reversible work equal reversible useful work?
3. How do you relate exergy with reversible useful work?
4. What is the specific exergy of of air at 1500 K and 200 kPa? The ambient state is at 298 K and 100 kPa.
   ANSWER: 567.8 kJ/kg.
5. What is the specific exergy of of helium at 1200 K and 300 kPa? The ambient state is at 298 K and 100 kPa.
   ANSWER: 1289 kJ/kg.
6. What is the specific exergy of of water at 600 K and 300 kPa? The ambient state is at 298 K and 100 kPa.
   ANSWER: 620.5 kJ/kg.
7. What is the specific exergy of of water at 1000ER and 50 psia? The ambient state is at 520ER and 14.7 psia.
   ANSWER: 286.3 Btu/lbm.
8. What is the specific exergy of of carbon dioxide at 1000ER and 50 psia? The ambient state is at 520ER and 14.7 psia.
   ANSWER: 24.99 Btu/lbm.
9. A piston-cylinder device contains 0.02 kg of helium at 350K. The gas is maintained at a constant pressure of 300 kPa. Heat is added until the volume is doubled. The surrounding air temperature and pressure are 290 K and 100 kPa. Find the specific exergy change and exergy change of the gas.
   ANSWER: 285.8 kJ/kg, 5.716 kJ.
10. A piston-cylinder device contains 0.02 kg of carbon dioxide at 350K. The gas is maintained at a constant pressure of 300 kPa. Heat is added until the volume is doubled. The surrounding air temperature and pressure are 290 K and 100 kPa. Find the specific exergy change and exergy change of the gas.
    ANSWER: 81.84 kJ/kg, 1.637 kJ.
11. A device contains 1 lbm of saturated water initially at 300 psia is heated to 400 psia and 1000ER. The surrounding air temperature and pressure are 520ER and 14.7 psia. Find the specific exergy change of the water.
    ANSWER: 498.3 Btu/lbm.
12. A device contains 1 lbm of helium initially at 300 psia is heated to 400 psia and 1000ER. The surrounding air temperature and pressure are 520ER and 14.7 psia. Find the specific exergy change of the helium.
    ANSWER: 4.768 Btu/lbm.

7.11. Exergy of a Flow Stream and Flow Exergy Change of an Open System

A flowing fluid has an additional form of energy called flow energy. Flow energy, pV, is defined in Chapter 1 as the energy required to push a volume V of a flowing stream substance

through a surface section by a pressure p. Flow energy occurs only when there is mass flow stream into an open system or out from the open system.

Similarly, assuming kinetic energy and potential energy are negligible, properties are uniform at a section of a flow stream, the useful reversible work of the flow stream is

$$W_{useful\ reversible}=(U+p_oV-T_o\ S)-\ (U_0+p_oV_0-T_o\ S_0)+(p-p_o)V \tag{7.11.1}$$

Where the term $(p-p_o)V$ is the flow work and the work done against the environment.

Under steady flow conditions, Equation (7.11.1) can be rearranged as

$$W_{useful\ reversible}=(H-H_o)-T_o(S-S_o) \tag{7.11.2}$$

The flow exergy of the fluid, Θ, can be defined as $\Theta=(E-E_o)-T_o(S-S_o)=(H-H_o)-T_o(S-S_o)$

The specific flow exergy change ()P) of a fluid stream for an open system without work and heat transfer during a process i-e is the difference between the exit and inlet section specific exergies of the system.

$$)P=P_e-P_i=(h_e-T_o\ s_e)-\ (h_i-T_o\ s_i) \tag{7.11.3}$$

The rate of exergy change of an open system can be written as

$$)\Theta dot_i=mdot_e(h_e-T_o\ s_e)-mdot_i(h_i-T_o\ s_i) \tag{7.11.4}$$

To generalize to more than one inlet and more than one exit, the flow exergy change and rate of flow exergy change of an open system can be written as

$$)\Theta=3(H-T_oS)_e\ -3(H-T_oS)_i \tag{7.11.5}$$

And

$$)\Theta dot_i=3\ mdot_e(h_e-T_o\ s_e)-3\ mdot_i(h_i-T_o\ s_i) \tag{7.11.6}$$

Example 7.11.1.

An air stream at 1100 K and 500 kPa with mass flow rate of 0.5 kg/s enters a steady-state steady-flow turbine. The stream leaves the turbine at 500 K and 120 kPa. The environment temperature and pressure are 290 K and 100 kPa. Find the specific flow exergy of the air at the inlet state and at the exit state. Find the specific flow exergy change and flow exergy change of the air stream.

To solve this problem by CyclePad, we take the following steps:

1. Build
   (A) Take a source, a turbine, and a sink from the open-system inventory shop and connect them. Take another source and another sink from the closed-system inventory shop and connect them. State 3 is the environment state.

(B) Switch to analysis mode.

2. Analysis

(A) Input the given information: (a) working fluids is air, (b) mass flow rate, pressure and temperature of the air at the inlet are 0.5 kg/s, 500 kPa and 1100 K, (c) pressure and temperature of the air at the exit are 120 kPa and 500 K, and (d) air temperature and pressure are 290 K and 100 kPa at state 3 (environment).

3. Display results

Display the turbine results. The results are: h_1=1104 kJ/kg, v_1=0.6307 m^3/kg, s_1=3.26 kJ/(K)kg, h_2=501.7 kJ/kg, v_2=1.19 m^3/kg, and s_2=2.88 kJ/(K)kg, h_3=291.0 kJ/kg, v_3=0.8314 m^3/kg, and s_3=2.39 kJ/(K)kg.

The specific flow exergy of the air at the inlet state and at the exit state are:

$P_1=(h_1-T_o\ s_1)-(h_0-T_o\ s_0)=[(1104-291)-290(3.26-2.39)]=560.7$ kJ/kg.

$P_2=(h_2-T_o\ s_2)-(h_0-T_o\ s_0)=[(501.7-291.0)-290(2.88-2.39)]=68.5$ kJ/kg.

The specific flow exergy change and flow exergy rate change of the air are:

$)P=P_2-P_1=68.5-560.7=-492.1$ kJ/kg.

$\Theta_2-\Theta_1=m()P)=0.5(-492.1)=-246.1$kW.

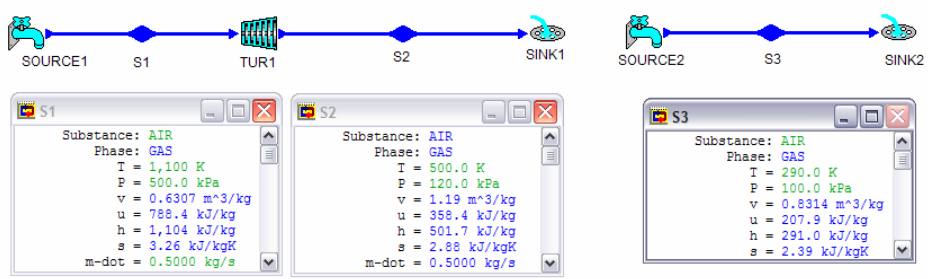

Figure E7.11.1. Flow exergy change of a turbine

Example 7.11.2.

A hot water stream at 500 K and 200 kPa with mass flow rate of 0.05 kg/s enters a steady-state steady-flow heat exchanger and leaves the heat exchanger turbine at 400 K and 200 kPa. A cold water stream at 300 K and 200 kPa enters the heat exchanger and leaves the heat exchanger at 350 K and 200 kPa. Determine the rate of flow exergy change of the heat exchanger. The environment temperature and pressure are at 298 K and 100 kPa.

To solve this problem by CyclePad, we take the following steps:

1. Build

(A) Take two sources, a heat exchanger, and two sinks from the open-system inventory shop and connect them. Take another source and another sink from the closed-system inventory shop and connect them. State 5 is the environment state.
(B) Switch to analysis mode.

2. Analysis
   (A) Input the given information: (a) working fluids are water, (b) mass flow rate, pressure and temperature of the hot water stream at the inlet are 0.05 kg/s, 200 kPa and 500 K, (c) pressure and temperature of the hot water stream at the exit are 200 kPa and 400 K, (d) pressure and temperature of the cold water stream at the inlet are 200 kPa and 300 K, and (e) pressure and temperature of the cold water stream at the exit are 200 kPa and 350 K.
3. Display results

(A) mass rate flow of cold water stream=0.0486 kg/s=mdot$_3$, h_1=2924 kJ/kg,, s_1=7.62 kJ/(K)kg, h_2=2720 kJ/kg, s_2=7.16 kJ/(K)kg, h_3=112.7 kJ/kg, s_3=0.3926 kJ/(K)kg, h_4=321.8 kJ/kg, and s_3=1.04 kJ/(K)kg.

The rate of flow exergy change=3[mdot(h-T_os)]$_e$-3[mdot(h-T_os)]$_i$={0.05[2720-298(7.16)]+0.0486[321.8-298(1.04)]}-{0.05[2924-298(7.62)]+0.0486[112.7-298(0.3926)]}=-2.554 kW.

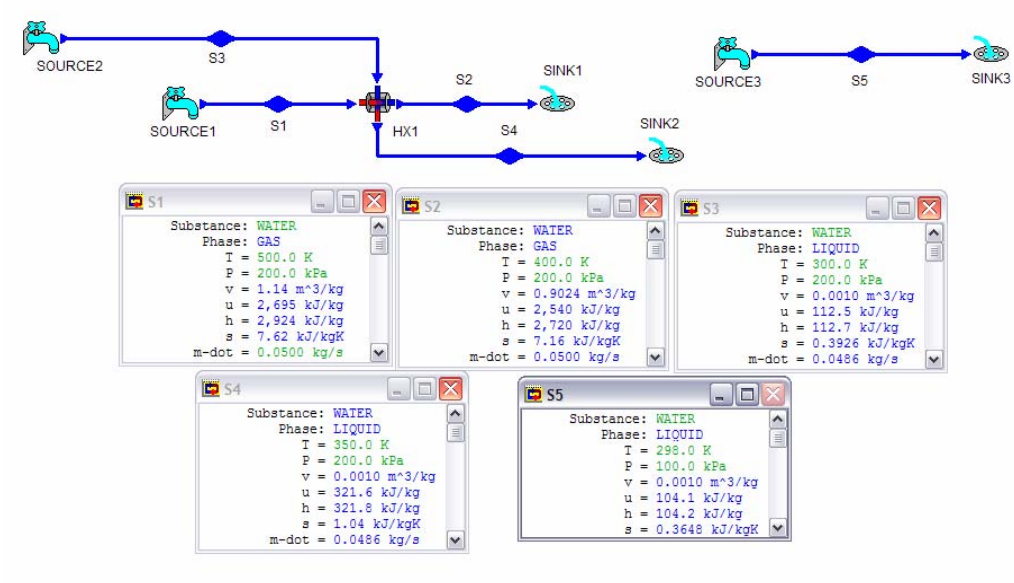

Figure E7.11.2. Rate of flow exergy change of a heat exchanger

Homework 7.11. Exergy and Rate of Flow Exergy Change of an Open System

1. Write the expression for the useful reversible work of a flow stream of an open system?

2. Why the useful reversible work for an open system is different from that for a closed system?
3. Write the expression for the rate of exergy change of an open system with more than one inlet and more than one exit.
4. A helium stream at 1100 K and 500 kPa with mass flow rate of 0.05 kg/s enters a steady-state steady-flow turbine. The stream leaves the turbine at 500 K and 120 kPa. The environment temperature and pressure are 290 K and 100 kPa. Find the specific flow exergy of the helium at the inlet state and at the exit state. Find the specific flow exergy change and flow exergy change of the helium stream.
   ANSWER: 3162 kJ/kg, 379.4 kJ/kg, -2783 kW.
5. A carbon dioxide stream at 1100 K and 500 kPa with mass flow rate of 0.05 kg/s enters a steady-state steady-flow turbine. The stream leaves the turbine at 500 K and 120 kPa. The environment temperature and pressure are 290 K and 100 kPa. Find the specific flow exergy change of the stream.
   ANSWER: -159.0 kJ/kg.
6. An air stream at 1100 K and 500 kPa with mass flow rate of 0.05 kg/s enters a steady-state steady-flow turbine. The stream leaves the turbine at 500 K and 120 kPa. The environment temperature and pressure are 290 K and 100 kPa. Find the specific flow exergy change of the stream.
   ANSWER: -201.4 kJ/kg.
7. A hot water stream at 550 K and 150 kPa with mass flow rate of 0.03 kg/s enters a steady-state steady-flow heat exchanger and leaves the heat exchanger turbine at 450 K and 100 kPa. A cold water stream at 300 K and 200 kPa enters the heat exchanger and leaves the heat exchanger at 350 K and 200 kPa. Determine the rate of flow exergy change of the heat exchanger. The environment temperature and pressure are at 298 K and 100 kPa.
   ANSWER: -3.309 kW.
8. A hot helium stream at 550 K and 150 kPa with mass flow rate of 0.03 kg/s enters a steady-state steady-flow heat exchanger and leaves the heat exchanger turbine at 450 K and 100 kPa. A cold helium stream at 300 K and 200 kPa enters the heat exchanger and leaves the heat exchanger at 350 K and 200 kPa. Determine the rate of flow exergy change of the heat exchanger. The environment temperature and pressure are at 298 K and 100 kPa.
   ANSWER: -9.087 kW.

7.12. THE DECREASE OF EXERGY PRINCIPLE

Let us consider a thermodynamic isolated system with its surroundings at temperature T_o. The isolated system has neither mass nor energy interaction with its surroundings. That is, m_i=0, m_e=0, E_i=0, E_e=0, Q=0, and W=0, where m_i is the mass flow into the system, m_e is the mass flow out from the system, E_i is the energy flow with mass into the system, m_e is the energy flow with mass out from the system, Q is the microscopic energy flow without mass into the system, and W is the macroscopic energy flow without mass into the system.

The mass balance of the system is the conservation of mass principle, which indicates that mass cannot be created nor destroyed. The mass balance of the isolated system is

$$m_2-m_1=m_i-m_e=0 \tag{7.12.1}$$

Where m_1 is the initial amount mass of the system and m_2 is the final amount mass of the system.

The First law of thermodynamics is the conservation of energy principle, which indicates that energy cannot be created nor destroyed. The energy balance of the isolated system is

$$E_2-E_1=Q-W+E_i-E_e=0 \tag{7.12.2}$$

Where E_1 is the initial amount energy of the system and E_2 is the final amount energy of the system.

According to the second law of thermodynamics, the entropy generated by the system due to internal irreversibility is

$$S_{gen}=S_2-S_1>0 \tag{7.12.3}$$

Where S_1 is the initial amount entropy of the system and S_2 is the final amount entropy of the system.

Multiplying Eq. (7.12.3) by the surroundings at temperature T_o, and subtracting it from Eq. (7.12.2) yields

$$-T_oS_{gen}=E_2-E_1-T_o(S_2-S_1)<0 \tag{7.12.4}$$

Rearranging Eq. (7.12.4) gives

$$-T_oS_{gen}=M_2-M_1<0 \tag{7.12.5}$$

Since the absolute temperature is always positive, we conclude that the exergy of an isolated system during a process always decreases due to irreversibility. In the limiting case of a reversible process, the exergy of the isolated system remains the same.

$$M_2- M_1<0 \text{ for irreversible process} \tag{7.12.5a}$$

and

$$M_2- M_1=0 \text{ for reversible process} \tag{7.12.5b}$$

or

$$()M)_{\text{isolated system}}<0 \text{ for irreversible process} \tag{7.12.6a}$$

and

$$()M)_{\text{isolated system}}=0 \text{ for reversible process} \tag{7.12.6b}$$

where)$M=M_2-M_1$.

Equation (7.12.6a) and Equation (7.12.6b) are known as the *decrease of exergy principle*.

For an isolated system, the decrease in exergy equals *exergy destroyed*.

The exergy destroyed ($M_{destroyed}$) of a system is proportional to to the entropy generated of the system due to irreversibility such as friction, free expansion, chemical reactions, mixing, etc.

$$M_{destroyed}=T_oS_{gen} \tag{7.12.7}$$

The exergy destroyed ($M_{destroyed}$) of a system is a non-negative quantity. The exergy destroyed is positive for an irreversible process and zero for a reversible process. The exergy destroyed is also called the *irreversibility*. Equation (7.12.7) is applied to both isolated system and non-isolated system.

Consider the universe is an isolated system. The exergy of the universe is therefore continuously decreasing until the exergy of the universe reaches its minimum value. At its minimum exergy value, the universe becomes complete equilibrium, i.e., there is no more activity within the universe.

Note that the exergy change of a system can be positive or negative just like that the entropy change of a system can be positive or negative during a process. When heat is removed from a non-isolated system to its surroundings, entropy of the system is decreased and the exergy of the system is increased.

Homework 7.12. The Decrease of Exergy Principle

1. Consider a reversible adiabatic process during which no entropy is generated. Does exergy destruction for this process be zero?
2. Consider an irreversible non-adiabatic process during which no entropy is generated. Does exergy destruction for this process be zero?
3. What is the decrease of exergy principle?4. Consider a process during which no entropy is generated for a non-isolated system. Does the exergy destruction for the process have to be equal to zero?
4. Energy is guided and balance by the first law of thermodynamics for all processes. Is exergy guided and balance by the first law of thermodynamics for all processes?
5. Energy is guided and balance by the first law of thermodynamics for all processes. Is exergy guided and balance by the first law of thermodynamics for all processes?
6. Is exergy balance for reversible processes?
7. Is exergy balance for irreversible processes?
8. Does exergy destroy partly or completely in an irreversible processes?
9. Consider a process during which no entropy is generated for an isolated system. Is the exergy destruction for the process zero?
   ANSWER: 15EC, 2245EC, 45.76%, 88.55%, 51.68%.

7.13. EXERGY EFFECTIVENESS OF DEVICES

With the increased use of exergy analysis, a term called exergy effectiveness or simply effectiveness has been used for devices such as heaters, coolers, heat exchangers, etc. that do not involve the production or the input of work. Effectiveness refers to comparison of the desired output of a non-work device with the exergy input. It provides a measure of the real device in terms of the actual change of state. The effectiveness of a device, ,, is defined as

,=(output exergy transfer)/(input exergy transfer) (7.13.1)

For example, in a steady flow steady state two-fluid heat exchanger a hot stream fluid is used to heat a cold stream fluid. Energy is transferred from the hot fluid to the cold fluid in the heat exchanger. Let the mass flow rate, exergy at the inlet, and exergy at the exit of the cold fluid in the heat exchanger be $mdot_c$, P_{ci} and P_{co}; and the mass flow rate, exergy at the inlet, and exergy at the exit of the hot fluid in the heat exchanger be $mdot_h$, P_{hi} and P_{ho}; The effectiveness of the heat exchanger can be defined as

$$,=mdot_c(P_{co}-P_{ci})/mdot_h(P_{hi}-P_{ho}) \quad (7.13.2)$$

Example 7.13.1.

In a boiler, heat is transferred from the products of combustion to the steam. The temperature of the products of combustion decreases from 1400 K to 850 K while the pressure remains constant at 100 kPa. The water enters the boiler at 1000 kPa, 430 K and leaves at 1000 kPa, 530 K with a mass flow rate of 1 kg/s. Determine the effectiveness of the boiler. The ambient temperature and pressure are 298 K and 100 kPa.

To solve this problem by CyclePad, we take the following steps:

1. Build
   (A) Take a heat exchanger, three sources and three sinks from the open-system inventory shop and connect them as shown in Figure E7.13.1.
   (B) Switch to analysis mode.
2. Analysis
   (A) Assume both hot-side and cold-side of the heat exchanger are isobaric. (B) Input the given information: (a) hot working fluids is air, (b) pressure and temperature at the hot-fluid inlet of the heat exchanger are 100 kPa and 1400 K (state 1), (c) temperature at the hot-fluid exit of the heat exchanger is 850 K (state 2); (d) cold working fluids is water, (e) mass flow rate, pressure and temperature at the cold-fluid inlet of the heat exchanger are 1 kg/s, 1000 kPa and 430 K (state 3), (f) temperature at the cold-fluid exit of the heat exchanger is 530 K (state 4); (g) air ambient condition is 100 kPa and 298 K (state 5), and (h) water ambient condition is 100 kPa and 298 K (state 6).
3. Display results
   (A) Display the results: $mdot_1$=4.15 kg/s, h_1=1405 kJ/kg, T_1=1400 K, s_1=3.97 kJ/kg (K); h_2=852.9 kJ/kg, T_2=850 K, s_2=3.47 kJ/kg (K); h_3=665.2 kJ/kg, T_3=430 K,

s_3=1.86 kJ/kg (K); h_4=2957 kJ/kg, T_4=530 K, s_4=6.95 kJ/kg (K); h_5=299 kJ/kg, s_5=2.42 kJ/kg (K); and h_6=64.2 kJ/kg, s_6=0.3648 kJ/kg (K).

(B) calculation gives P_4-P_3=h_4-h_3-T_0(s_4-s_3)=775.0 kJ/kg; and P_1-P_2=h_1-h_2-T_0(s_1-s_2)=403.1 kJ/kg.

The answer is ,=(1)775.0/[4.15(403.1)]=0.4633.

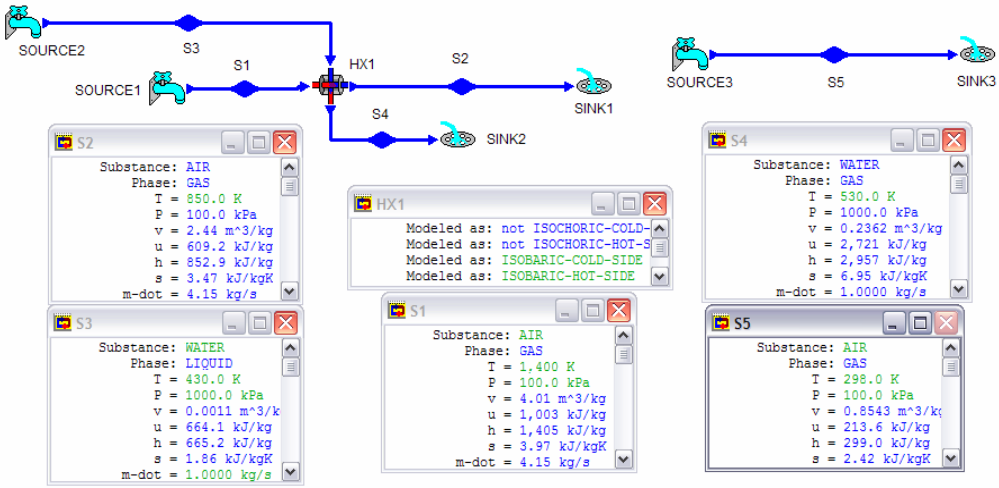

Figure E7.13.1. Exergy effectiveness of a heat exchanger

Homework 7.13. Exergy Effectiveness of Devices

1. How do you define the exergy effectiveness of a mixing chamber? Write the expression.
2. In a boiler, heat is transferred from the products of combustion to the steam. The temperature of the products of combustion decreases from 1400 K to 850 K while the pressure remains constant at 100 kPa. The water enters the boiler at 1500 kPa, 430 K and leaves at 1500 kPa, 530 K with a mass flow rate of 1 kg/s. Determine the mass flow rate of the products of combustion and the effectiveness of the boiler. The ambient temperature and pressure are 298 K and 100 kPa.
   ANSWER: 4.12 kg/s, 0.4996.
3. In a heat exchanger, heat is transferred from helium to the steam. The temperature of the helium decreases from 1400 K to 850 K while the pressure remains constant at 100 kPa. The water enters the heat exchanger at 1500 kPa, 430 K and leaves at 1500 kPa, 530 K with a mass flow rate of 1 kg/s. Determine the mass flow rate of the helium and the effectiveness of the heat exchanger. The ambient temperature and pressure are 298 K and 100 kPa.
   ANSWER: 0.8049 kg/s, 0.4631.

7.14. EXERGY CYCLE EFFICIENCY

Let us define an exergy cycle efficiency, 0_{ex}. The exergy cycle efficiency can be expressed as the ratio of desirable exergy transfer output and the required input energy of the cycle, i.e.

0_{ex}=(desirable exergy transfer output)/(required input energy) (7.14.1)

The objective of a heat engine is to produce net work. To accomplish this objective, heat is added. The exergy cycle efficiency of the heat engine is

0_{ex}=(exergy transfer of net work)/(heat input) (7.14.2)

The objective of a refrigerator is to remove heat from a cold space. To accomplish this objective, work is added. The exergy cycle efficiency of the refrigerator is

0_{ex}=(exergy transfer of heat removed)/(work input) (7.14.3)

Similarly, the objective of a heat pump is to add heat to a hot space. To accomplish this objective, work is added. The exergy cycle efficiency of the refrigerator is

0_{ex}=(exergy transfer of heat added)/(work input) (7.14.4)

The exergy cycle efficiency is conceptually different from the cycle efficiency and COP. The exergy cycle efficiency can be used to see whether a realistic cycle is well design or not. The criterion of excellence should not be "What we achieved divided by what we supplied." This would be the first law cycle efficiency or coefficient of performance. The criterion should be "To what extent did we utilize the available energy?" That can be measured by either the second law efficiency or the exergy cycle efficiency.

The exergy cycle efficiency provides a rating or measure of the real cycle and is another convenient way of utilizing the concept of exergy.

Note that although ideal cycles are internally reversible, they are not totally reversible because of heat interaction with the surroundings across a finite temperature difference. These external irreversibilities reduce the performance of ideal cycles below comparable reversible Carnot cycles operating between the same temperature limits.

Example 7.14.1.

Consider a refrigerator using R-12 as working fluid. It posses an evaporator temperature of 263 K and a condenser temperature of 313 K. The mass flow rate of the refrigerant is 0.01 kg/s. The surroundings temperature is 298 K. Determine the COP. Calculate the second law cycle efficiency and the exergy cycle efficiency of the refrigerator.

To solve this problem by CyclePad, we take the following steps:

1. Build

(A) Take a heater, a compressor, a cooler, and a throttling valve from the open-system inventory shop and connect them.
(B) Switch to analysis mode.

2. Analysis
   (A) Assume the heater is isobaric, compressor is adiabatic and 100% efficiency, and cooler is isobaric.
   (B) Input the given information: (a) working fluids is R-12, (b) mass flow rate, quality and temperature at the inlet of the compressor are 0.01 kg/s, 1and 263 K, (c) quality and temperature at the exit of the cooler are 0 and 313 K.
3. Display results

Display the results: h_1=183.1kJ/kg, T_1=263 K, s_1=0.7020 kJ/kg (K); h_2=209.0 kJ/kg, T_2=320.7 K, s_2=0.7020 kJ/kg (K); h_3=7444 kJ/kg, T_3=313 K, s_3=0.2713 kJ/kg (K); h_4=74.44 kJ/kg, T_4=263 K, s_4=0.2888 kJ/kg (K);T_{max}=320.7 K,T_{min}=263 K, and COP=4.20. Then, $w_c=h_2-h_1$=-25.9 kJ/kg, $P_1-P_4=h_1-h_4-T_0(s_1-s_4)$=-14.5 kJ/kg; and COP_{carnot}=263/(320.7-263)=4.558.

The answers are COP=4.20, 0_{II}=4.20/4.558=0.9214, and $0_{ex}=(P_1-P_4)/w_c$=14.5/25.9=0.5598.

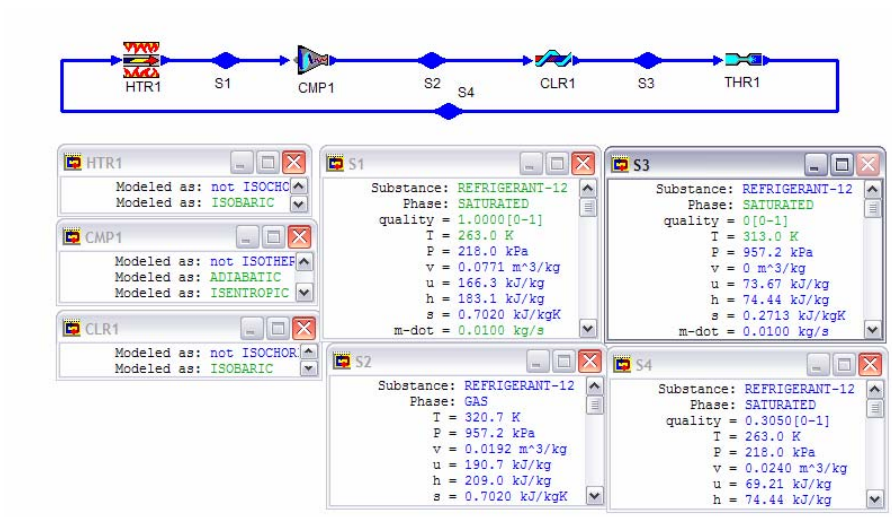

Figure E7.14.1. Exergy cycle efficiency of refrigerator

Example 7.14.2.

Superheated steam at 10 Mpa and 770 K enters the turbine of a Rankine steam power plant operating at steady state and expands to a condenser pressure of 50 kPa. Assume the efficiencies of the turbine and pump are 100%. The mass flow rate of the steam is 1 kg/s. The surroundings temperature is 298 K. Determine the cycle efficiency, the second law cycle efficiency and the exergy cycle efficiency of the power plant.

To solve this problem by CyclePad, we take the following steps:

1. Build
   (A) Take a heater, a pump, a cooler, and a turbine from the open-system inventory shop and connect them.
   (B) Switch to analysis mode.
2. Analysis
   (A) Assume the heater is isobaric, cooler is isobaric, turbine is adiabatic and 100% efficiency, and pump is adiabatic and 100% efficiency. (B) Input the given information: (a) working fluids is water, (b) mass flow rate, quality and pressure at the inlet of the pump are 1 kg/s, 0 and 50 kPa, (c) pressure and temperature at the exit of the heater are10000 kPa and 770 K.
3. Display results

Display the results: h_1=340.5 kJ/kg, T_1=354.5 K, s_1=1.09 kJ/kg (K); h_2=350.8 kJ/kg, T_2=355.1 K, s_2=1.09 kJ/kg (K); h_3=3366 kJ/kg, T_3=770 K, s_3=6.59 kJ/kg (K); h_4=2289 kJ/kg, T_4=354.5 K, s_4=6.59 kJ/kg (K); net work=1067 kJ/kg, heat added=3015 kJ/kg, cycle efficiency=35.39%, and Carnot cycle efficiency=53.96%. Then, P_2-P_1=h_2-h_1-T_0(s_2-s_1)=10.3 kJ/kg; P_3-P_4=h_3-h_4-T_0(s_3-s_4)=1077 kJ/kg; and)P_{net} =(P_3-P_4)-(P_2-P_1)=1077-10.3=1066.7 kJ/kg. The answers are 0=35.39%

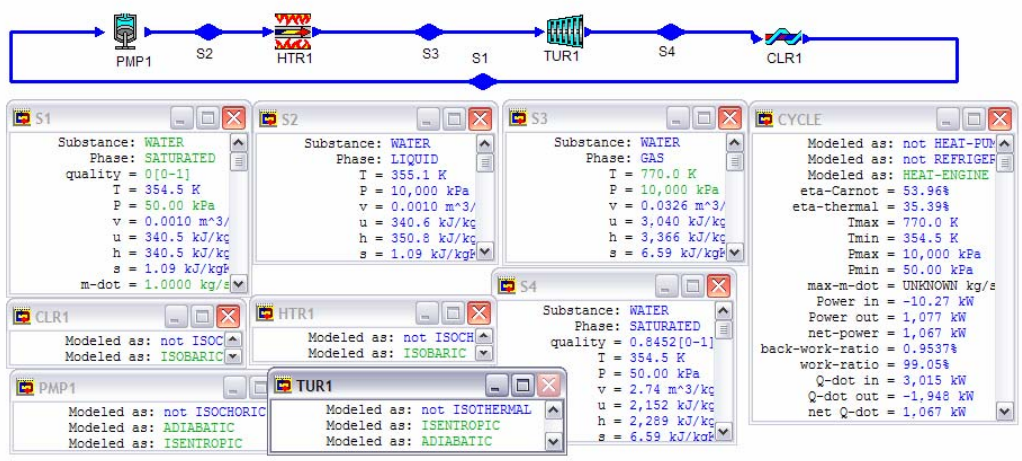

Figure E7.14.2. Exergy cycle efficiency of Rankine cycle

Example 7.14.3.

Consider a heat pump using R-134a as working fluid. It posses an evaporator temperature of 268 K and a condenser pressure of 1000 kPa. The mass flow rate of the refrigerant is 1 kg/s. The surroundings temperature is 280 K. Determine the COP. Calculate the second law cycle efficiency and the exergy cycle efficiency of the heat pump.

To solve this problem by CyclePad, we take the following steps:

1. Build

(A) Take a heater, a compressor, a cooler, and a throttling valve from the open-system inventory shop and connect them.
(B) Switch to analysis mode.

2. Analysis
   (A) Assume the heater is isobaric, compressor is adiabatic and 100% efficiency, and cooler is isobaric.
   (B) Input the given information: (a) working fluids is R-134a, (b) mass flow rate, quality and temperature at the inlet of the compressor are 1 kg/s, 1and 268 K, (c) quality and pressure at the exit of the cooler are 0 and 1000 kPa.
3. Display results

Display the results: h_1=395.2kJ/kg, T_1=268 K, s_1=1.73 kJ/kg (K); h_2=424.7 kJ/kg, T_2=317.2 K, s_2=1.73 kJ/kg (K); h_3=255.6 kJ/kg, T_3=312.5 K, s_3=1.19 kJ/kg (K); h_4=255.6 kJ/kg, T_4=268 K, s_4=1.21 kJ/kg (K);T_{max}=317.2 K,T_{min}=268 K, and COP=5.75. Then, $w_c=h_2-h_1$=-29.43 kJ/kg, $P_3-P_2=h_3-h_2-T_0(s_3-s_2)$=-17.9 kJ/kg; and COP_{carnot}=317.2/(317.2-268)=6.447.

The answers are COP=5.75, 0_{II}=5.75/6.447=0.8919, and $0_{ex}=(P_3-P_2)/w_c$=17.9/29.43=0.6082.

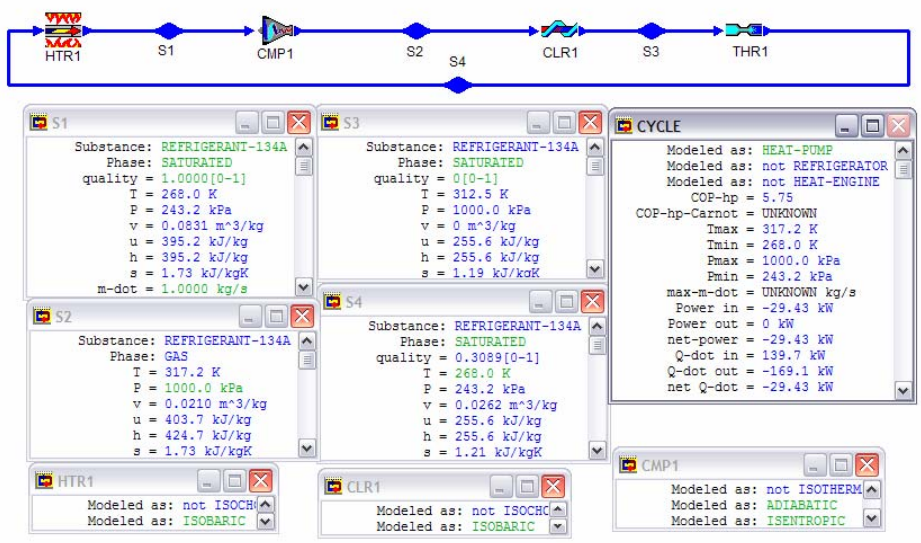

Figure E7.14.3. Exergy cycle efficiency of heat pump

Homework 7.14. Exergy Cycle Efficiency

1. How do you define exergy cycle efficiency of a heat engine?
2. Is the exergy cycle efficiency of a heat pump defined the same as that of a refrigerator?
3. What is the first law cycle efficiency?
4. How does the exergy cycle efficiency differ from the first law cycle efficiency?

5. Consider a refrigerator using R-12 as working fluid. It posses an evaporator temperature of 263 K and a condenser temperature of 320 K. The mass flow rate of the refrigerant is 0.01 kg/s. The surroundings temperature is 298 K. Determine the COP. Calculate the second law cycle efficiency and the exergy cycle efficiency of the refrigerator.
   ANSWER: 3.47, 0.8695, 0.4619.
6. Consider a refrigerator using R-12 as working fluid. It posses an evaporator temperature of 263 K and a condenser temperature of 315 K. The mass flow rate of the refrigerant is 0.01 kg/s. The surroundings temperature is 298 K. Determine the COP. Calculate the second law cycle efficiency and the exergy cycle efficiency of the refrigerator.
   ANSWER: 3.94, 0.9011, 0.5239.
7. Consider a refrigerator using R-12 as working fluid. It posses an evaporator temperature of 268 K and a condenser temperature of 320 K. The mass flow rate of the refrigerant is 0.01 kg/s. The surroundings temperature is 298 K. Determine the COP. Calculate the second law cycle efficiency and the exergy cycle efficiency of the refrigerator.
   ANSWER: 3.96, 0.8821, 0.4436.
8. Superheated steam at 12 Mpa and 770 K enters the turbine of a Rankine steam power plant operating at steady state and expands to a condenser pressure of 50 kPa. Assume the efficiencies of the turbine and pump are 100%. The mass flow rate of the steam is 1 kg/s. The surroundings temperature is 298 K. Determine the cycle efficiency, the second law cycle efficiency and the exergy cycle efficiency of the power plant.
   ANSWER: 36.09%, 66.88%, 36.15%.
9. Superheated steam at 15 Mpa and 770 K enters the turbine of a Rankine steam power plant operating at steady state and expands to a condenser pressure of 50 kPa. Assume the efficiencies of the turbine and pump are 100%. The mass flow rate of the steam is 1 kg/s. The surroundings temperature is 298 K. Determine the cycle efficiency, the second law cycle efficiency and the exergy cycle efficiency of the power plant.
   ANSWER: 36.88%, 68.35%, 37.05%.
10. Superheated steam at 15 Mpa and 770 K enters the turbine of a Rankine steam power plant operating at steady state and expands to a condenser pressure of 50 kPa. Assume the efficiencies of the turbine and pump are 100%. The mass flow rate of the steam is 1 kg/s. The turbine efficiency is 88%. The surroundings temperature is 298 K. Determine the cycle efficiency, the second law cycle efficiency and the exergy cycle efficiency of the power plant.
    ANSWER: 32.39%, 60.03%, 36.41%.
11. Consider a heat pump using R-134a as working fluid. It posses an evaporator temperature of 268 K and a condenser pressure of 1200 kPa. The mass flow rate of the refrigerant is 1 kg/s. The surroundings temperature is 280 K. Determine the COP. Calculate the second law cycle efficiency and the exergy cycle efficiency of the heat pump.
    ANSWER: 4.88, 0.8509, 0.5893.

12. Consider a heat pump using R-134a as working fluid. It posses an evaporator temperature of 268 K and a condenser pressure of 1400 kPa. The mass flow rate of the refrigerant is 1 kg/s. The surroundings temperature is 280 K. Determine the COP. Calculate the second law cycle efficiency and the exergy cycle efficiency of the heat pump.
ANSWER: 4.28, 0.8167, 0.5945.

7.15. SUMMARY

Exergy and irreversibilitiy provide information needed to determine the maximum useful work that a system in a given state can perform.

Reversible work is the maximum work done by a system in a given change of state.

Reversible work of a closed system from an initial state 1 to a final state 2 is given by the expression, $W_{12}=U_1-U_2-T_o(S_1-S_2)$.

Reversible work of an open system is given by the expression, $W_{rev}=-(h_e-T_os_e)m_e+(h_i-T_os_i)m_i-m_2(u_2-T_os_2)+m_1(u_1-T_os_1)$.

Reversible work of an open system in steady-flow and steady-state is given by the expression, $W_{rev}=-(h_e-T_os_e)m_e+(h_i-T_os_i)m_i$.

Irreversibility is the difference between the reversible and the actual work for the same change of state, $I=W_{revt}-W_{act}$.

Irreversiblity of a closed system from an initial state 1 to a final state 2 is given by the expression, $I=T_o(S_2-S_1)+T_o()S_o)$.

Rate of irreversiblity of an open system is given by the expression, $Idot=T_o[s_imdot_i-s_emdot_e]-Qdot$.

Exergy(also called *available energy* or *availability*) is synonymous with maximum useful work. Exergy is the work potential of a system in a specified environment and represents the maximum amount of useful work that can be obtained as the system is brought to equilibrium with the environment.

Exergy of a closed system is given by the expression, $M=(U+p_oV-T_o\ S)-(U_0+p_oV_0-T_o\ S_0)$.

Specific exergy change of a closed system is given by the expression, $N_2-N_1=(u_2+p_ov_2-T_o\ s_2)-(u_1+p_ov_1-T_o\ s_1)$.

Flow exergy of a fluid stream is given by the expression, $\Theta=(H-H_o)-T_o(S-S_o)$.

Rate of flow exergy change of a closed system is given by the expression, $)\Theta dot_i=mdot_e(h_e-T_o\ s_e)-mdot_i(h_i-T_o\ s_i)$.

The exergy destroyed ($M_{destroyed}$) of a system is proportional to to the entropy generated of the system due to irreversibility. The exergy destroyed ($M_{destroyed}$) of a system is a non-negative quantity. The exergy destroyed is positive for an irreversible process and zero for a reversible process.

Effectiveness of a device that does not involve the production or the input of work is given by the expression,,$=mdot_c(P_{co}-P_{ci})/mdot_h(P_{hi}-P_{ho})$.

Exergy cycle efficiency is expressed as 0_{ex}=(desirable exergy transfer output)/(required input energy).

Chapter 8

VAPOR CYCLES

8.1. CARNOT VAPOR CYCLE

Theoretically, the Carnot vapor cycle is the most efficient vapor power cycle operating between two temperature reservoirs.

The *Carnot vapor cycle* as shown in Figure 8.1.1 is composed of the following four processes:

1-2 isentropic compression
2-3 isothermal heat addition
3-4 isentropic expansion
4-1 isothermal heat rejection

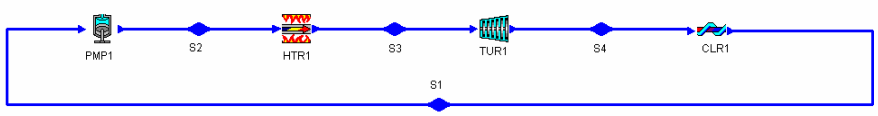

Figure 8.1.1. Carnot vapor cycle

In order to achieve the isothermal heat addition and isothermal heat rejection processes, the Carnot simple vapor cycle must operate inside the vapor dome. The T-s diagram of a Carnot cycle operating inside the vapor dome is shown in Figure 8.1.2. Saturated water at state 2 is evaporated isothermally to state 3, where it is saturated vapor. The steam enters a turbine at state 3 and expands isentropically, producing work, until state 4 is reached. The vapor-liquid mixture would then be partially condensed isothermally until state 1 is reached. At state 1, a pump would isentropically compress the vapor-liquid mixture to state 2.

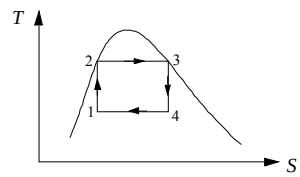

Figure 8.1.2. Vapor Carnot cycle T-S diagram

Applying theFirst law and Second law of thermodynamics of the open system to each of the four processes of the Carnot vapor cycle yields:

$$Q_{12} = 0 \tag{8.1.1}$$

$$W_{12} = m(h_1 - h_2) \tag{8.1.2}$$

$$W_{23} = 0 \tag{8.1.3}$$

$$Q_{23} - 0 = m(h_3 - h_2) \tag{8.1.4}$$

$$Q_{34} = 0 \tag{8.1.5}$$

$$W_{34} = m(h_3 - h_4) \tag{8.1.6}$$

$$W_{41} = 0 \tag{8.1.7}$$

and

$$Q_{41} - 0 = m(h_1 - h_4) \tag{8.1.8}$$

The net work (W_{net}), which is also equal to net heat (Q_{net}), is

$$W_{net} = Q_{net} = Q_{23} + Q_{41} \tag{8.1.9}$$

The thermal efficiency of the cycle is

$$0 = W_{net} /Q_{23} =Q_{net} /Q_{23} = 1- Q_{41} /Q_{23} =1- (h_4 - h_1)/(h_3 - h_2) \tag{8.1.10}$$

Example 8.1.1.

A steam Carnot cycle operates between 250EC and 100EC. Determine the pump work, turbine work, heat added, quality of steam at the exit of the turbine, quality of steam at the inlet of the pump, and cycle efficiency.

To solve this problem by CyclePad, we take the following steps:

1. Build
   (A) Take a pump, a boiler, a turbine and a condenser from the inventory shop and connect the four devices to form the basic Rankine cycle.
   (B) Switch to analysis mode.
2. Analysis
   (A) Assume a process each for the four devices: (a) pump as adiabatic and isentropic, (b) boiler as isothermal (isobaric inside the vapor dome), (c) turbine as adiabatic and isentropic, and (d) condenser as isothermal (isobaric inside the vapor dome) .
   (B) Input the given information: (a) working fluid is water, (b) the inlet temperature and quality of the boiler are 400EC and 0, (c) the exit quality of the boiler is 1, and (d) the inlet temperature of the condenser is 100EC.
3. Display results

Display the T-s diagram and cycle properties results. The cycle is a heat engine. The answers are pump work=-111.9 kJ/kg, turbine work=603.7 kJ/kg, and 0=28.67%.

Comments: The Carnot vapor cycle as illustrated by Example 8.1.1 is not practical. Difficulties arise in the isentropic processes of the cycle. One difficulty is that the isentropic turbine will have to handle steam with low quality. The impingement of liquid droplets on the turbine blade causes erosion and wear. Another difficult is the isentropic compression of a liquid-vapor mixture. The two phase mixture of the steam causes serious cavitation problem during the compression process. Also, since the specific volume of the saturated mixture is high, the pump power required is also very high. Thus the Carnot vapor cycle is not a realistic model for vapor power cycles.

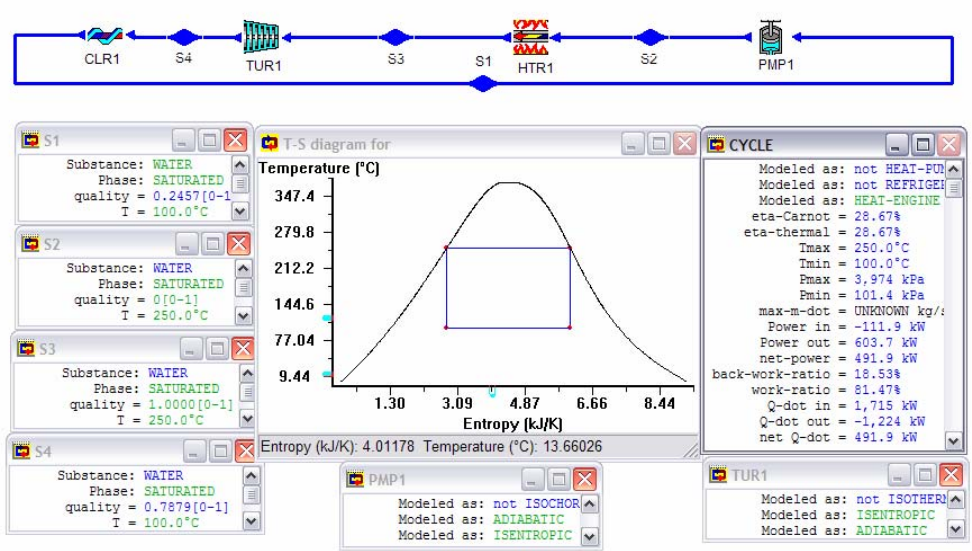

Figure E8.1.1. Carnot vapor cycle

Homework 8.1. Carnot Vapor Cycle

1. Why is excessive moisture in steam undesirable in steam turbine? What is the highest moisture content allowed?
2. Why is the Carnot cycle not a realistic model for steam power plants?
3. Cite some reasons why the practical realization of the Carnot vapor cycle would be almost impossible.
4. How many single properties are needed to determine the vapor Carnot cycle?
5. A steady flow of 1 kg/s Carnot engine uses water as the working fluid. Water changes phase from saturated liquid to saturated vapor as heat is added from a heat source at 300EC. Heat rejection takes place at a pressure of 10 kPa. Determine (A) the quality at the exit of the turbine, (B) the quality at the inlet of the pump, (C) the heat transfer added in the boiler, (D) the power required for the pump, (E) the power produced by the turbine, (F) the heat transfer rejected in the condenser, and (G) the cycle efficiency.
   ANSWER: (A) 0.6741, (B) 0.3473, (C) 1405 kW, (D) -321.6 kW, (E) 944.5 kW, (F) -781.8 kW, (G) 44.35%.

8.2. Basic Rankine Vapor Cycle

The working fluid for vapor cycles is alternately condensed and vaporized. When a working fluid remains in the saturation region at constant pressure, its temperature is also constant. Thus the condensation or the evaporation of a fluid in a heat exchanger is a process that closely approximates the isothermal heat transfer processes of the Carnot cycle. Owing to this fact, vapor cycles are closely approximate the behavior of the Carnot cycle. Thus, in general, they tend to perform efficiently.

The *Rankine cycle* is a modified Carnot cycle to overcome the difficulties with the Carnot cycle when the working fluid is a vapor. In the Rankine cycle, the heating and cooling processes occur at constant pressure. Figure 8.2.1 shows the devices used in a basic Rankine cycle, and Figure 8.2.2 is the T-s diagram of the basic Rankine cycle.

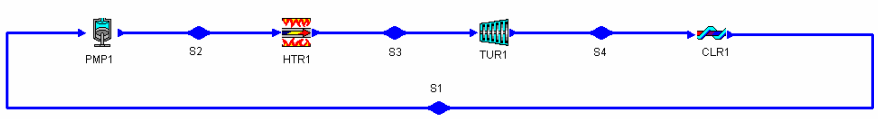

Figure 8.2.1. Basic Rankine cycle

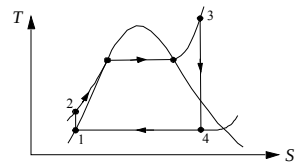

Figure 8.2.2. Basic Rankine cycle T-S diagram

The *basic Rankine cycle* is composed of the following four processes:

1-2 isentropic compression
2-3 isobaric heat addition
3-4 isentropic expansion
4-1 isobaric heat removing

Water enters the pump at state 1 as a low pressure saturated liquid to avoid the cavitation problem and exits at state 2 as a high pressure compressed liquid. The heat supplied in the boiler raises the water from the compressed liquid at state 2 to saturated liquid to saturated vapor and to a much higher temperature superheated vapor at state 3. The superheated vapor at state 3 enters the turbine where it expands to state 4. The superheating moves the isentropic expansion process to the right on the T-s diagram as shown in Figure 8.2.3, thus preventing a high moisture content of the steam as it exits the turbine at state 4 as a saturated mixture. The exhaust steam from the turbine enters the condenser at state 4 and is condensed at constant pressure to state 1 as saturated liquid.

Applying the First law and Second law of thermodynamics of the open system to each of the four processes of the Rankine cycle yields:

$$Q_{12} = 0 \tag{8.2.1}$$

$$W_{12} = m(h_1 - h_2) = mv_1(p_1 - p_2) \tag{8.2.2}$$

$$W_{23} = 0 \tag{8.2.3}$$

$$Q_{23} - 0 = m(h_3 - h_2) \tag{8.2.4}$$

$$Q_{34} = 0 \tag{8.2.5}$$

$$W_{34} = m(h_3 - h_4) \tag{8.2.6}$$

$$W_{41} = 0 \tag{8.2.7}$$

and

$$Q_{41} - 0 = m(h_1 - h_4) \tag{8.2.8}$$

The net work (W_{net}), which is also equal to net heat (Q_{net}), is

$$W_{net} = Q_{net} = Q_{23} + Q_{41} \tag{8.2.9}$$

The thermal efficiency of the cycle is

$$0 = W_{net} /Q_{23} = Q_{net} /Q_{23} = 1- Q_{41} /Q_{23} = 1- (h_4 - h_1)/(h_3 - h_2) \tag{8.2.10}$$

Example 8.2.1.

Determine the efficiency and power output of a basic Rankine cycle using steam as the working fluid in which the condenser pressure is 80 kPa. The boiler pressure is 3 Mpa. The steam leaves the boiler as saturated vapor. The mass rate of steam flow is 1 kg/s.

To solve this problem by CyclePad, we take the following steps:

1. Build
   (A) Take a pump, a boiler, a turbine and a condenser from the inventory shop and connect the four devices to form the basic Rankine cycle.
   (B) Switch to analysis mode.
2. Analysis
   (A) Assume a process each for the four devices: (a) pump as isentropic, (b) boiler as isobaric, (c) turbine as isentropic, and (d) condenser as isobaric.
   (B) Input the given information: (a) working fluid is water, (b) the inlet pressure and quality of the pump are 80 kPa and 0, (c) the inlet pressure and quality of the turbine are 3 Mpa and 1, and (d) the mass flow rate is 1 kg/s.
3. Display results

Display the T-s diagram and cycle properties results. The cycle is a heat engine. The answers are 0=24.61%, $Wdot_{pump}$=-3.07 kW, $Qdot_{boiler}$=2409 kW, $Wdot_{turbine}$=595.7 kW, $Qdot_{condenser}$=-1816 kW, and Net power output=592.7 kW.

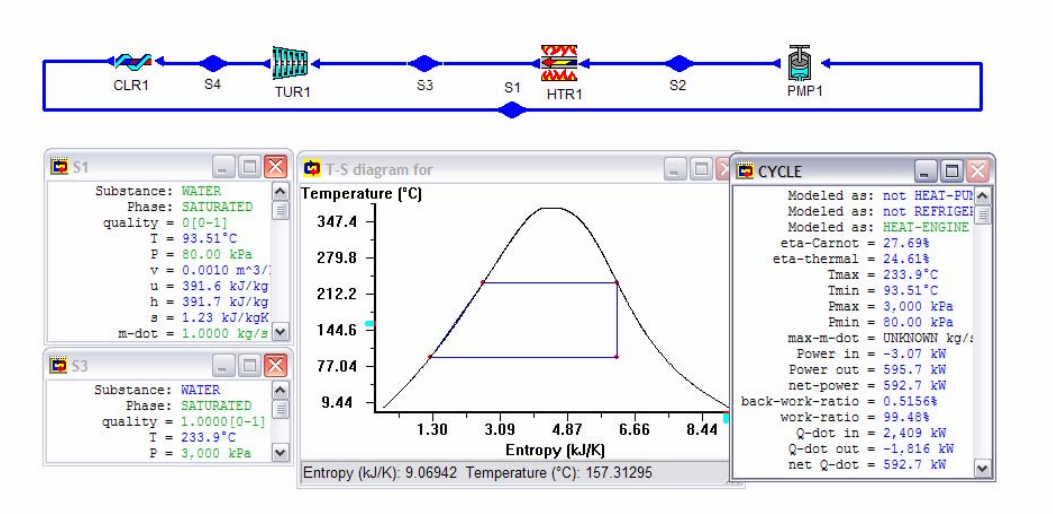

Figure E8.2.1. Rankine cycle

Comments:

(1) The sensitivity diagram of cycle efficiency vs boiler pressure demonstrates that increasing the boiler pressure increases the boiler temperature. This raises the average temperature at which heat is added to the steam and thus raises the cycle efficiency. Operating pressures of boilers have increased over the years up to 30 MPa (4500 psia) today.

(2) The sensitivity diagram of cycle efficiency vs condenser pressure demonstrates that decreasing the condenser pressure is decreases the condenser temperature. This drops the average temperature at which heat is removed to the surroundings and thus raises the cycle efficiency. Operating pressures of condensers have decreased over the years to 5 kPa (0.75 psia) today.

The Rankine efficiency could be increased by increasing the boiler pressure, since the area enclosed by the cycle (net work) in the T-s diagram will be increased.

Example 8.2.2.

A simple Rankine cycle using water as the working fluid operates between a boiler pressure of 500 psia and a condenser pressure of 20 psia. The mass flow rate of the water is 3 lbm/s. Determine (A) the quality of the steam at the exit of the turbine, (B) the net power of the cycle, and (C) the cycle efficiency. Then change the boiler pressure to 600 psia, and determine (D) the quality of the steam at the exit of the turbine and (E) the net power of the cycle.

To solve this problem by CyclePad, we take the following steps:

1. Build

(A) Take a pump, a boiler, a turbine and a condenser from the inventory shop and connect the four devices to form the basic Rankine cycle.
(B) Switch to analysis mode.

2. Analysis
   (A) Assume a process each for the four devices: (a) pump as adiabatic and isentropic, (b) boiler as isobaric, (c) turbine as adiabatic and isentropic, and (d) condenser as isobaric.
   (B) Input the given information: (a) working fluid is water, (b) the inlet pressure and quality of the pump are 20 psia and 0, (c) the inlet pressure and quality of the turbine are 500 psia and 1, and (d) the mass flow rate is 3 lb/s.
3. Display results
   (A) Display cycle properties results. The cycle is a heat engine. The answers are $x_{\text{turbine outlet}}$=0.8082, $Wdot_{net}$=981.8 hp, and 0=22.97%.
   (B) Change the boiler pressure to 600 psia and display cycle properties results again. The answers are $x_{\text{turbine outlet}}$=0.7953, $Wdot_{net}$=1028 hp, and 0=24.08%.

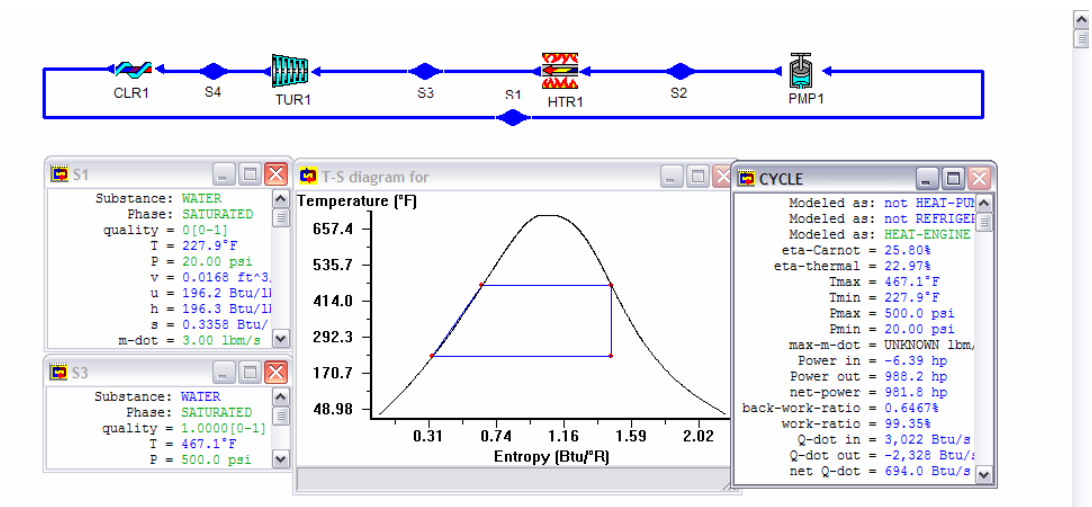

Figure E8.2.2. Rankine cycle

Comments: The effect of increasing the boiler pressure on the quality of the steam at the exit of the turbine can be seen by comparing the two cases. The higher the boiler pressure, the higher the moisture content (or the lower the quality) at the exit of the turbine. Steam with qualities less than 90 percent, at the exit of the turbine, cannot be tolerated in the operation of actual Rankine steam power plants. To increase steam quality at the exit of the turbine, superheating and reheating are used.

Example 8.2.3.

Determine the efficiency and power output of a superheat Rankine cycle using steam as the working fluid in which the condenser pressure is 80 kPa. The boiler pressure is 3 MPa.

The steam leaves the boiler at 400EC. The mass rate of steam flow is 1 kg/s. Plot the sensitivity diagram of cycle efficiency vs boiler superheat temperature.

To solve this problem by CyclePad, we take the following steps:

1. Build
   (A) Take a pump, a boiler, a turbine and a condenser from the inventory shop and connect the devices to form the basic Rankine cycle.
   (B) Switch to analysis mode.
2. Analysis
   (A) Assume a process each for the four devices: (a) pump as isentropic, (b) boiler as isobaric, (c) turbine as isentropic, and (d) condenser as isobaric.
   (B) Input the given information: (a) working fluid is water, (b) the inlet pressure and quality of the pump are 80 kPa and 0, (c) the inlet pressure and temperature of the turbine are 3 MPa and 400EC, and (d) the mass flow rate is 1 kg/s.
3. Display results

Display the T-s diagram and cycle properties results. The cycle is a heat engine. The answers are 0=26.11% and net power output=740.3 kW, and (B) Display the sensitivity diagram of cycle efficiency vs superheat temperature.

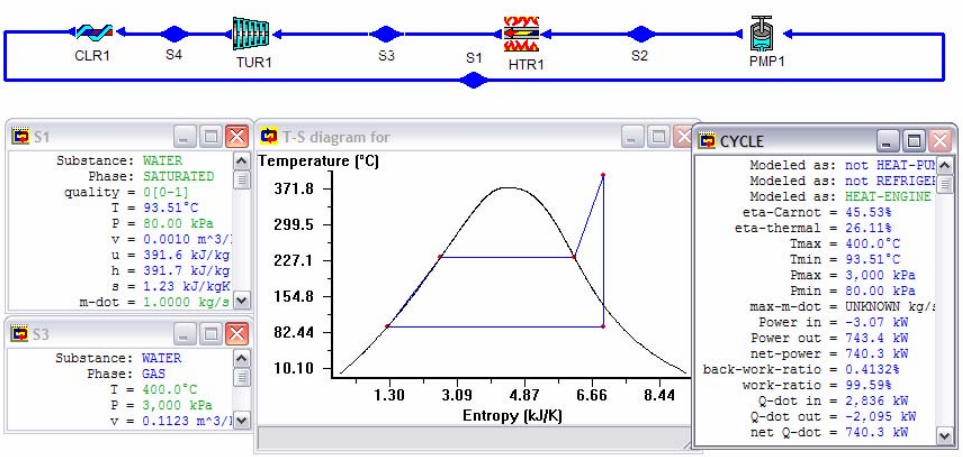

Figure E8.2.3a. Superheated Rankine cycle

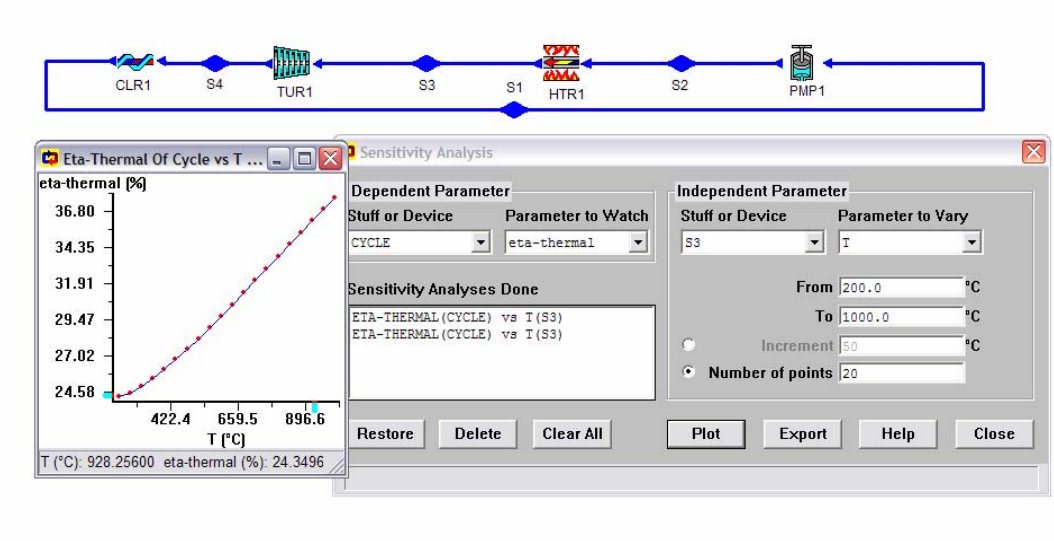

Figure E8.2.3b. Superheated Rankine cycle *sensitivity analysis*

Comments: From the sensitivity diagram of cycle efficiency vs superheat temperature, it is seen that the higher the superheat temperature, the higher the cycle efficiency. The superheat temperature is limited, however, due to metallurgical considerations. Presently, the maximum operating superheat temperature is 620EC (1150EF).

Homework 8.2. Basic Rankine Cycle

1. How does the Rankine cycle differ from the Carnot cycle? Why is the Carnot cycle not a realistic cycle for vapor power plants?
2. What are the processes that make up the simple ideal Rankine cycle?
3. What is the quality of vapor at the inlet of the pump in a simple ideal Rankine cycle? Why?
4. Which component determines the high pressure in a Rankine cycle?
5. What is the effect of increasing the boiler pressure on pump work input, turbine work output, heat added in the boiler, and cycle efficiency?
6. Which component determines the low pressure in a Rankine cycle?
7. What is the effect of decreasing the condenser pressure on pump work input, turbine work output, heat removed in the boiler, and cycle efficiency?
8. Consider a Rankine cycle without superheat. How many single properties are needed to determine the cycle?
9. Consider a Rankine cycle with superheat. How many single properties are needed to determine the cycle?
10. What is the effect of increasing the superheating temperature on turbine work output, moisture content at turbine exit, heat added in the boiler, and cycle efficiency?
11. What is the minimum quality of vapor required at the exit of the turbine in a Rankine cycle? Why?
12. In an ideal Rankine cycle, indicate whether the following statements are true or false:

(A) All the processes are internally reversible.
(B) Efficiency equals that of a Carnot cycle.
(C) The pressure at the turbine outlet depends on the condenser temperature.
(D) Cycle efficiency increases as condenser pressure decreases.
(E) Cycle efficiency increases as boiler pressure decreases.
(F) The lowest pressure in the cycle is atmospheric.
(G) In the condenser)S_{steam}>0.
(H) In the turbine)S_{steam}>0.
(I) The entropy of steam passing through the boiler decreases.
(J) The entropy of the boiler remains constant.
(K) Cycle efficiency increases along with the pressure in the boiler.

13. The compressor work and pump work are given by the expression Ivdp. What is the basic reason that pump work is much smaller than the compressor work?
14. The pump work is usually negligible small in the Rankine cycle. Would this be true if the steam at the exit of the turbine is pumped directly back to the boiler without condensing it?
15. Steam in an ideal Rankine cycle flows at a mass rate of flow of 14 lbm/s. It leaves the boiler at 1250 psia and 1000EF, and enters a turbine where it is expanded and then exhausted to the main condenser, which is operating at a pressure of 1 psia. The fluid leaves the condenser as a saturated liquid, where it is pumped by a pump back into the boiler. Determine for the cycle:
    (A) Pump power.
    (B) The rate of heat added by the boiler.
    (C) The ideal turbine power.
    (D) The rate of heat rejected by the condenser.
    (E) The thermal efficiency of the cycle.
    ANSWER: (A) -74 hp, (B) 19948 Btu/s, (C) 11706 hp, (D) -11726 Btu/s, (E) 41.22%.
16. An ideal Rankine cycle uses water as a working fluid, which circulates at a rate of 80 kg/s. The boiler pressure is 6 MPa, and the condenser pressure is 10 kPa. Determine (A) the power required to operate the pump, (B) the heat transfer added to the water in the boiler, (C) the power developed by the turbine, (D) the heat transfer removed from the condenser, (E) the quality of steam at the exit of the turbine, and (F) the thermal efficiency of the cycle.
    ANSWER: (A) -487.1 kW, (B) 206879 kW, (C) 73666 kW, (D) -133699 kW, (E) 0.6987, (F) 35.37%.
17. An ideal Rankine cycle uses water as a working fluid, which circulates at a rate of 80 kg/s. The boiler pressure is 6 MPa, and the condenser pressure is 10 kPa. The steam is superheated and enters the turbine at 600EC and leaves the condenser as a saturated liquid. Determine (A) the power required to operate the pump, (B) the heat transfer added to the water in the boiler, (C) the power developed by the turbine, (D) the heat transfer removed from the condenser, (E) the quality of steam at the exit of the turbine, and (F) the thermal efficiency of the cycle.
    ANSWER: (A) -487.1 kW, (B) 276815 kW, (C) 110975 kW, (D) -166327 kW, (E) 0.8692, (F) 39.91%.

18. A Rankine cycle using 1 kg/s of water as the working fluid operates between a condenser pressure of 7.5 kPa and a boiler pressure of 17 MPa. The super-heater temperature is 550EC. Determine (A) the pump power, (B) the turbine power, (C) the heat transfer added in the boiler, and (D) the cycle thermal efficiency.
    ANSWER: (A) -17.10 kW, (B) 1419 kW, (C) 3241 kW, (D) 43.27%.
19. In a Rankine power plant, the steam temperature and pressure at the turbine inlet are 1000EF and 2000 psia. The temperature of the condensing steam in the condenser is maintained at 60EF. The power generated by the turbine is 30000 hp. Assuming all processes to be ideal, determine: (A) the pump power required (hp), (B) the mass flow rate, (C) the heat transfer added in the boiler (Btu/hr), (D) the heat transfer removed in the condenser (Btu/hr), and (E) the cycle thermal efficiency (%).
    ANSWER: (A) -267.5 hp, (B) 31.92 lbm/s, (C) 165500000 Btu/h, (D) -89860000 Btu/h, (E) 45.71%.
20. Water circulates at a rate of 80 kg/s in an ideal Rankine power plant. The boiler pressure is 6 Mpa and the condenser pressure is 10 kPa. The steam enters the turbine at 600EC and water leaves the condenser as a saturated liquid. Find: (A) the power required to operate the pump, (B) the heat transfer added in the boiler, (C) the power developed by the turbine, (D) the thermal efficiency of the cycle.
    ANSWER: (A) -487.10 kW, (B) 276815 kW, (C) 110975 kW, (D) 39.91%.
21. For an ideal Rankine cycle, steam enters the turbine at 5 MPa and 400°C, and exhausts to the condenser at 10 kPa. The turbine produces 20,000 kW of power.
    (A) Draw a T-s diagram for this cycle with respect to the saturation curve.
    (B) What is the mass flow rate of the steam? (kg/s)
    (C) What is the rate of heat rejection from the condenser, and the rate of heat added in the boiler?
    (D) Find the thermal efficiency for this cycle.
    ANSWER: (B) 18.33 kg/s, (C) -35063 kW, (D) 36.21%.
22. Steam is generated in the boiler of a steam power plant operating on an ideal Rankine cycle at 10 MPa and 500 °C at a steady rate of 80 kg/s. The steam expands in the turbine to a pressure of 7.5 kPa. Determine (A) the quality of the steam at the turbine exit, (B) rate of heat rejection in the condenser, (C) the power delivered by the turbine, and (D) the cycle thermal efficiency (%).
    ANSWER: (A) 0.7847, (B) -150979 kW, (C) 105442 kW, (D) 40.93%.
23. A steam power plant operating on an ideal Rankine cycle has a boiler pressure of 800 psia and a condenser pressure of 2 psia. The quality at the turbine exit is 95% and the power generated by the turbine is 10,000 hp. Determine (A) the mass flow rate of steam (lbm/s), (B) the turbine inlet temperature (°F), (C) the rate of heat addition in the boiler (Btu/h), and (D) the cycle thermal efficiency (%).
    ANSWER: (A) 13.19 lbm/s, (B) 1450 °F, (D) 60640000 Btu/h, (D) 41.83%.
24. Water is the working fluid in an ideal Rankine cycle. The condenser pressure is 8 kPa, and saturated vapor enters the turbine at: (A) 15 MPa, (B) 10 MPa, (C) 7 MPa, and (D) 4 MPa. The net power output of the cycle is 100 MW. Determine for each case the mass flow rate of water, heat transfer in the boiler and the condenser, and the thermal efficiency.

ANSWER: (A) 106.8 kg/s, 258641 kW, -158554 kW, and 38.7%, (B) 104.2 kg/s, 264648 kW, -164599 kW, and 37.8%, (C) 105.5 kg/s, 273404 kW, -173350 kW, and 36.6%, and (D) 111.2 kg/s, 291735 kW, -191686 kW, and 34.29%,

25. A steam power plant operates on the Rankine cycle. The steam enters the turbine at 7 MPa and 550EC. It discharges to the condenser at 20 kPa. Determine the quality of the steam at the exit of the turbine, pump work, turbine work, heat added in the boiler, and thermal cycle efficiency.
    ANSWER: 0.8652, -7.10 kJ/kg, 1240 kJ/kg, 3272 kJ/kg, and 37.67%.
26. A steam power plant operates on the Rankine cycle. The steam with a mass rate flow of 10 kg/s enters the turbine at 6 MPa and 600EC. It discharges to the condenser at 10 kPa. Determine the quality of the steam at the exit of the turbine, pump power, turbine power, rate of heat added in the boiler, and thermal cycle efficiency.
    ANSWER: 0.8692, -60.89 kJ/kg, 13872 kJ/kg, 34602 kJ/kg, and 39.91%.
27. A steam Rankine power plant has saturated vapor at 3 Mpa leaving the boiler at a mass flow rate of 1 kg/s. The turbine exhausts to the condenser operating at 10 kPa. Find the pump power, turbine power, net power produced, rate of heat transfer added in the boiler, rate of heat transfer removed in the condenser, and the cycle efficiency.
    ANSWER: -3.06 kW, 845.6 kW, 842.5 kW, 2608 kW, -1766 kW, 32.30%.
28. A steam power plant operating in an ideal Rankine cycle has a high pressure of 5 Mpa and a low pressure of 15 kPa. The turbine exhaust state should have a quality of at least 95%, and the net power generated by the plant should be 7.5 MW. Find the pump power, turbine power, rate of heat transfer added in the boiler, rate of heat transfer removed in the condenser, mass flow rate of steam, and the cycle efficiency.
    ANSWER: -24.66 kW, 7525 kW, 18423 kW, -10923 kW, 4.85 kg/s, 40.71%.
29. A steam power plant operating in an ideal Rankine cycle has a high pressure of 5 Mpa and a low pressure of 15 kPa. The turbine exhaust state should have a quality of at least 90%, and the net power generated by the plant should be 7.5 MW. Find the pump power, turbine power, rate of heat transfer added in the boiler, rate of heat transfer removed in the condenser, mass flow rate of steam, and the cycle efficiency.
    ANSWER: -28.9 kW, 7529 kW, 19628 kW, -12128 kW, 5.68 kg/s, 38.21%.
30. A Rankine steam power plant has a steam generator exit at 4 Mpa and 500 °C with a mass flow rate of 1 kg/s and a condenser exit temperature of 45 °C. Find the pump power, turbine power, net power produced, rate of heat transfer added in the boiler, rate of heat transfer removed in the condenser, and the cycle efficiency.
    ANSWER: -4.03 kW, 1138 kW, 1134 kW, 3138 kW, -2004 kW, 36.15%.

8.3. IMPROVEMENTS TO RANKINE CYCLE

The thermal efficiency of the Rankine cycle can be improved by increase the average temperature at which heat is transferred to the working fluid in the heating process, or decrease the average temperature at which heat is transferred to the surroundings from the working fluid in the cooling process. Several modifications to increase the thermal efficiency of the basic Rankine cycle include increasing boiler pressure, decreasing condenser pressure, superheater, reheater, regenerator, pre-heater, etc.

Increasing the average temperature during the heat addition process increases the boiler pressure. The maximum boiler pressure is limited by the tube metallurgical material problem in the boiler. Increasing the boiler pressure increases the moisture content of the steam at the turbine exit which is not desirable.

Increasing the average temperature during the heat addition process without increasing boiler pressure can be done by superheating the steam to high temperature with a super-heater. Superheating the steam to a higher temperature also decreases the moisture content of the steam at the turbine exit which is very desirable.

Increasing the average temperature during the heat addition process can be accomplished with a super-heater. Moisture content of steam at the turbine exhaust can be decreased by reheating the steam between the stages of a multi-stage turbine.

An increase in the average temperature during the heat addition process can also be accomplished by regenerating the steam. A portion of the partially expanded steam between the turbine stages of a multi-stage turbine is drawn off to preheat the condensed liquid before it is returned to the boiler. In this way, the amount of heat added at the low temperature is reduced. So the average temperature during the heat addition process is increased.

Decreasing the average temperature during the heat rejection process decreases the condenser pressure and increases cycle efficiency. The minimum condenser pressure is limited by the sealing and leakage problem in the condenser.

Homework 8.3. Improvements to Rankine Cycle

1. Consider a simple ideal Rankine cycle with fixed turbine inlet state. What is the effect of lowering the condenser temperature on the cycle efficiency?
2. Consider a simple ideal Rankine cycle with fixed turbine inlet temperature and condenser temperature. What is the effect of increasing the boiler pressure on the cycle efficiency?
3. Consider a simple ideal Rankine cycle with fixed boiler and condenser pressures. What is the effect of super-heating the steam to a higher temperature on the cycle efficiency?
4. Consider a simple ideal Rankine cycle with fixed boiler and condenser pressures. What is the effect of reheating the steam on the cycle efficiency?
5. Consider a simple ideal Rankine cycle with fixed boiler and condenser pressures. What is the effect of regenerating on the cycle efficiency?

8.4. ACTUAL RANKINE CYCLE

For actual Rankine cycles, many irreversibilities are present in various components. Fluid friction causes pressure drops in the boiler and condenser. These drops in the boiler and condenser are usually small. The major irreversibilities occur within the turbine and pump. To account for these irreversibility effects, turbine efficiency and pump efficiency must be used in computing the actual work produced or consumed. The T-s diagram of the actual Rankine cycle is shown in Figure 8.4.1. The effect of irreversibilities on the thermal efficiency of a Rankine cycle is illustrated in the following example.

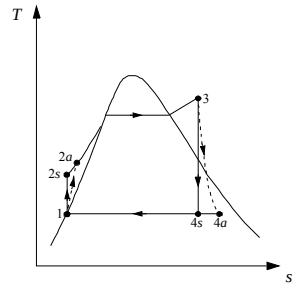

Figure 8.4.1. Actual Rankine cycle T-s diagram

Example 8.4.1.

Determine the efficiency and power output of an actual Rankine cycle using steam as the working fluid and having a condenser pressure is 80 kPa. The boiler pressure is 3 MPa. The steam leaves the boiler at 400EC. The mass rate of steam flow is 1 kg/s. The pump efficiency is 85% and the turbine efficiency is 88%. Show the cycle on T-s diagram. Plot the sensitivity diagram of cycle efficiency versus pump efficiency, and cycle efficiency versus turbine efficiency.

To solve this problem by CyclePad, we take the following steps:

1. Build
   (A) Take a pump, a boiler, a turbine and a condenser from the inventory shop and connect the devices to form the actual Rankine cycle.
   (B) Switch to analysis mode.
2. Analysis
   (A) Assume a process each for the four devices: (a) pump as adiabatic, (b) boiler as isobaric, (c) turbine as adiabatic, and (d) condenser as isobaric.
   (B) Input the given information: (a) working fluid is water, (b) the inlet pressure and quality of the pump are 80 kPa and 0, (c) the inlet pressure and temperature of the turbine are 3 Mpa and 400EC, (d) the mass flow rate is 1 kg/s, (e) the phase at the exit of turbine is saturated, and (f) the pump efficiency is 85% and the turbine efficiency is 88%.
3. Display results
   (A) Display the T-s diagram (Figure E8.4.1a) and cycle properties results (Figure E8.4.1b). The cycle is a heat engine. The answers are 0=22.95% and net power output=650.5 kW.
   (B) Display cycle efficiency versus pump efficiency (Figure E8.4.1c), and cycle efficiency versus turbine efficiency (Figure E8.4.1d).

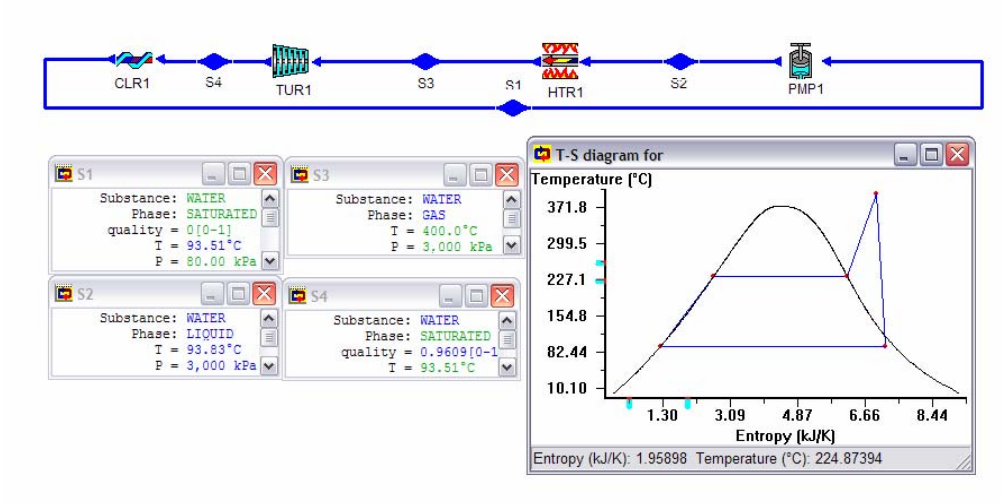

Figure E8.4.1a. Rankine cycle T-s diagram

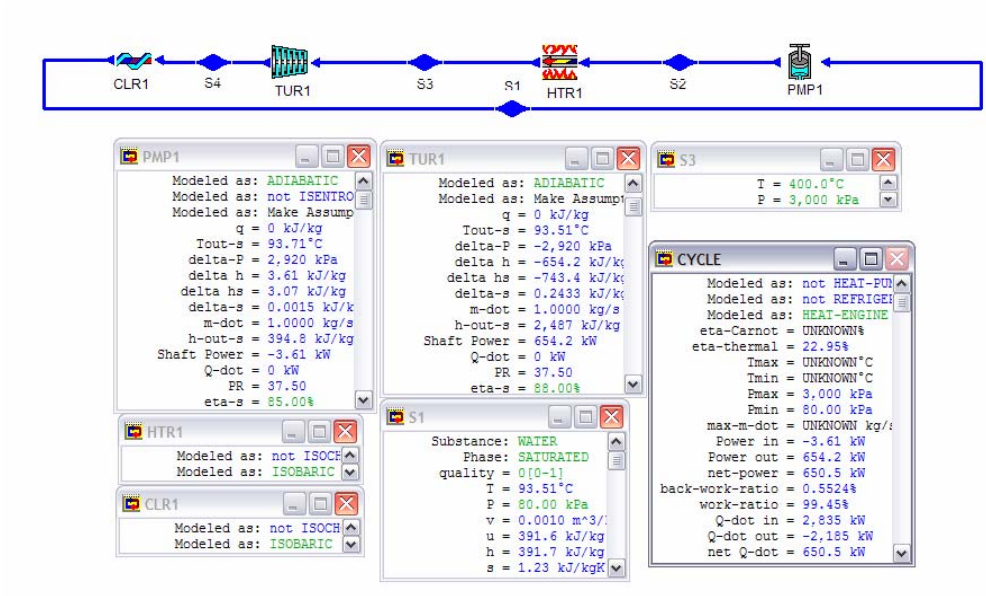

Figure E8.4.1b. Rankine cycle results

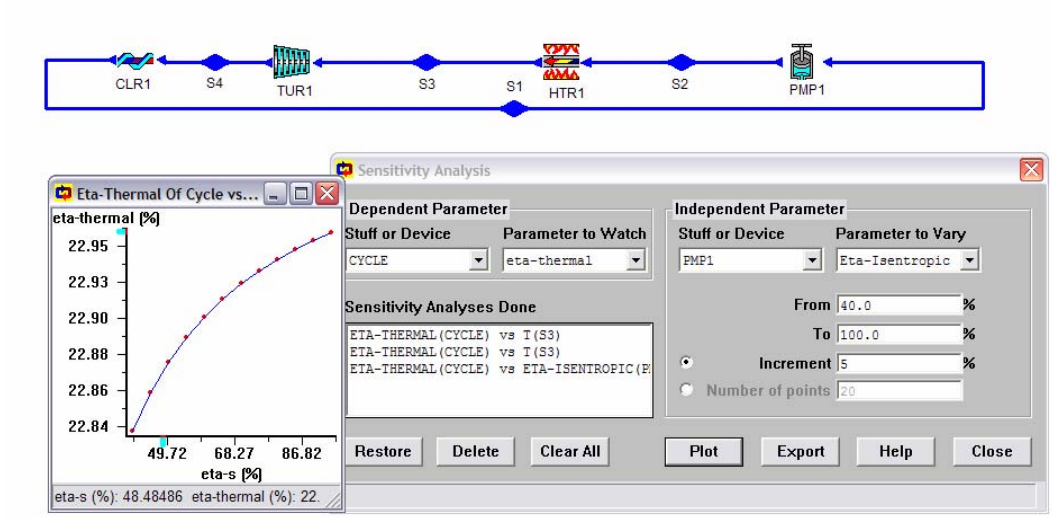

Figure E8.4.1c. Rankine cycle efficiency versus pump efficiency sensitivity analysis

Figure E8.4.1d. Rankine cycle efficiency versus turbine efficiency sensitivity analysis

Comments:

(1) The pump work is quite small compared to the turbine work. Therefore, it is seen from the sensitivity diagram of cycle efficiency vs pump efficiency that the cycle efficiency is not sensitive to the pump efficiency.

(2) The sensitivity diagram of cycle efficiency vs turbine efficiency demonstrates that the cycle efficiency is sensitive to the turbine efficiency.

The power output of the Rankine cycle can be controlled by a throttling valve. The inlet steam pressure and temperature may be throttled down to a lower pressure and temperature if desired. Adding a throttling valve to the Rankine cycle decreases the cycle efficiency. The throttling Rankine cycle is shown in Figure 8.4.2. An example illustrated the throttling Rankine cycle is given in Example 8.4.2.

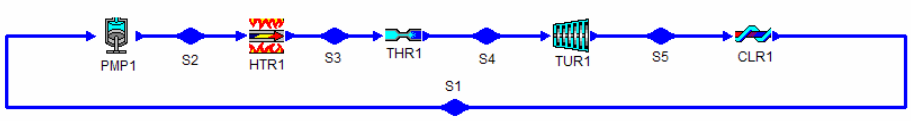

Figure 8.4.2. Throttling Rankine cycle

Example 8.4.2.

An actual steam Rankine cycle operates between a condenser pressure of 1 psia and a boiler pressure of 600 psia. The outlet temperature of the super-heater is 600°F and the turbine efficiency is 80%. The rate of mass flow in the cycle is 1 lbm/s.

(A) Find the pump power required, turbine power produced, rate of heat added in the boiler, and the cycle efficiency. (B) If the pressure is throttled down to 400 psia at the inlet of the turbine, find the pump power required, turbine power produced, rate of heat added in the boiler, rate of heat removed in the condenser, and the cycle efficiency. Draw the T-s diagram.

To solve part (A) of this problem, let us make use of Figure 8.4.2.

(a) Assume the pump is isentropic, boiler is isobaric, turbine is adiabatic with 80% efficiency, and condenser is isobaric; (b) Input p_1=1 psia, x_1=0, p_2=600 psia, T_3=600°F, mdot=1lbm/s, and p_4=600 psia.

The results are: $Wdot_{pump}$=-2.55 hp, $Wdot_{turbine}$=491.0 hp, $Qdot_{boiler}$=1218 Btu/s, and 0=28.36% as shown in the following diagram.

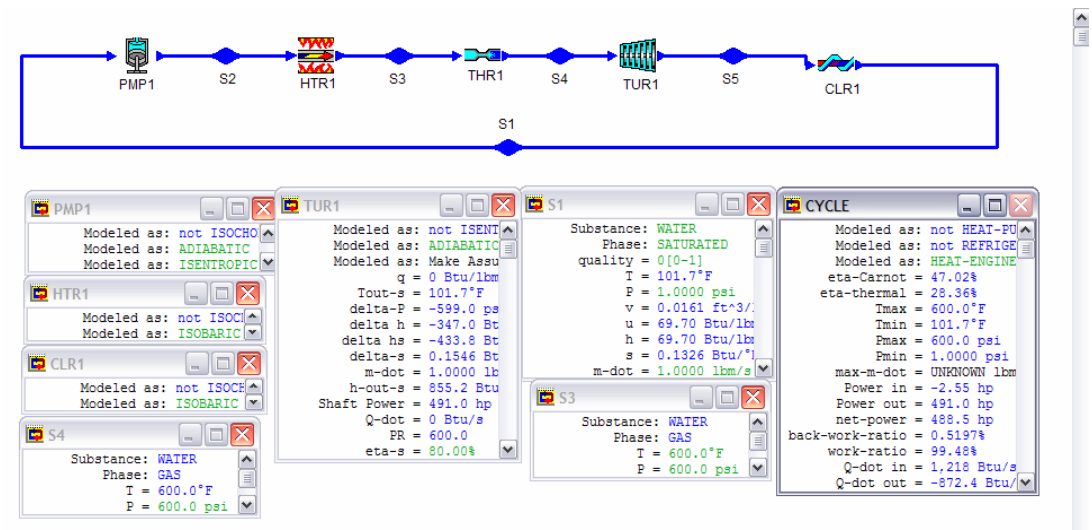

Figure E8.4.2a. Rankine cycle with throttling valve off

To solve part (B) of this problem, let us make use of Figure 8.4.2.

(B) (a) Assume the pump is isentropic, boiler is isobaric, turbine is adiabatic with 80% efficiency, and condenser is isobaric; (b) Input p_1=1 psia, x_1=0, p_2=600 psia, T_3=600°F, mdot=1lbm/s, and p_4=400 psia;

The results are: $Wdot_{pump}$=-2.55 hp, $Wdot_{turbine}$=461.2 hp, $Qdot_{boiler}$=1218 Btu/s, and 0=26.62% as shown in Figure E8.4.2b. The T-s diagram is shown in Figure E8.4.2c.

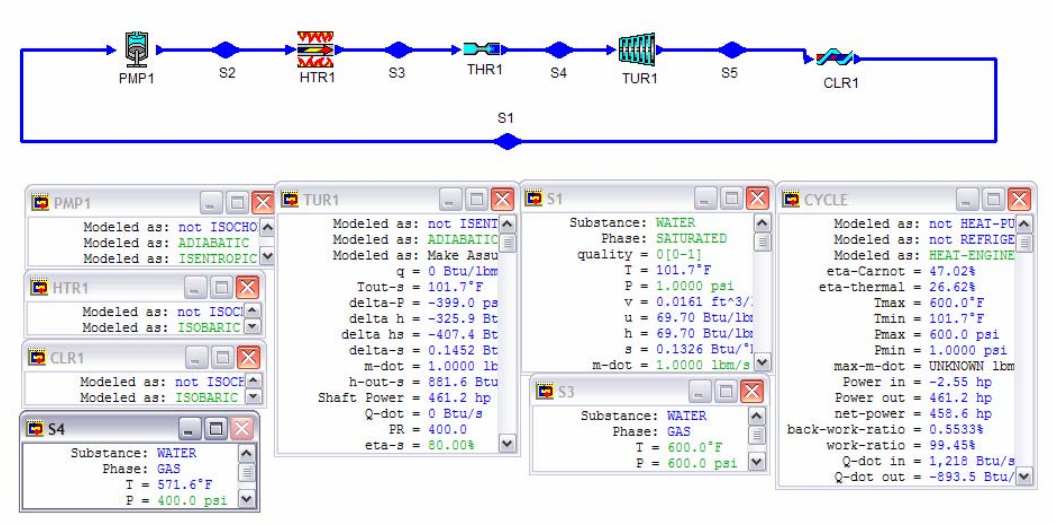

Figure E8.4.2b. Rankine cycle with throttling valve on

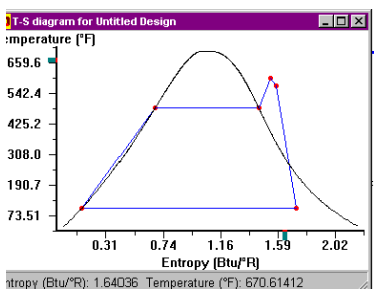

Figure E8.4.2c. Rankine throttling cycle T-s diagram

Homework 8.4. Actual Rankine Cycle

1. How does an actual Rankine cycle differ from an ideal Rankine cycle?
2. Is Rankine cycle efficiency sensitive to the pump inefficiency? Why?
3. Is Rankine cycle efficiency sensitive to the turbine inefficiency? Why?
4. What is the purpose of the throttling valve in the Rankine throttling cycle? Does it improve the cycle efficiency?
5. Steam enters a turbine of a Rankine power plant at 5 MPa and 400°C, and exhausts to the condenser at 10 kPa. The turbine produces a power output of 20,000 kW. Given a turbine isentropic efficiency of 90% and a pump isentropic efficiency of 100%.
   (A) What is the mass flow rate of the steam around the cycle?
   (B) What is the rate of heat rejection from the condenser?
   (C) Find the thermal efficiency of the power plant.
   ANSWER: (A) 20.37 kg/s, (B) -41181 kW, (C) 32.58%.
6. 12.7 kg/s of superheated steam flow at 2 MPa and 320EC enters the turbine of a Rankine power plant and expands to a condenser pressure of 10 kPa. Assuming the

isentropic efficiencies of the turbine and pump are 85 and 100 percent, respectively, find: (A) the actual pump power required, (B) the quality of steam at the exit of the turbine, (C) the actual turbine power produced, (D) the rate of heat supplied in the boiler, (E) the rate of heat removed in the condenser, and (F) the cycle efficiency.
ANSWER: (A) -26.02 kW, (B) 0.8638 kW, (C) 10298 kW, (D) 36511 kW, (E) -26239 kW, (F) 28.13%.

7. Water circulates at a rate of 80 kg/s in a Rankine power plant. The boiler pressure is 6 MPa and the condenser pressure is 10 kPa. The steam enters the turbine at 700EC and water leaves the condenser as a saturated liquid. The actual turbine efficiency is 90%. Find: (A) the power required to operate the pump, (B) the heat transfer added in the boiler, (C) the power developed by the turbine, (D) the thermal efficiency of the cycle.
ANSWER: (A) -487.1 kW, (B) 295655 kW, (C) 110968 kW, (D) 37.37%.
8. A Rankine cycle using water as the working fluid operates between a condenser pressure of 7.5 kPa and a boiler pressure of 17 MPa. The super-heater temperature is 550EC. The rate of mass flow in the cycle is 2.3 lbm/s. The turbine efficiency is 85%. Determine (A) the pump power, (B) the turbine power, (C) the rate of heat added in the boiler, and (D) the cycle thermal efficiency.
ANSWER: (A) -39.33 kW, (B) 2775 kW, (C) 7454 kW, (D) 36.7%.
9. A throttling Rankine cycle using water as the working fluid operates between a condenser pressure of 7.5 kPa and a boiler pressure of 17 MPa. The super-heater temperature is 550EC. The rate of mass flow in the cycle is 2.3 lbm/s. The turbine efficiency is 85%. If the pressure at the exit of the throttling valve is 12 MPa, determine (A) the pump power, (B) the turbine power, (C) the rate of heat added in the boiler, and (D) the cycle thermal efficiency.
ANSWER: (A) -39.33 kW, (B) 2686 kW, (C) 7454 kW, (D) 35.51%.
10. A steam Rankine power plant has saturated vapor at 3 Mpa leaving the boiler at a mass flow rate of 1 kg/s. The turbine exhausts to the condenser operating at 10 kPa. The turbine efficiency is 85%. Find the pump power, turbine power, net power produced, rate of heat transfer added in the boiler, rate of heat transfer removed in the condenser, and the cycle efficiency.
ANSWER: -3.06 kW, 718.7 kW, 715.7 kW, 2608 kW, -1893 kW, 27.44%.
11. A Rankine steam power plant has a steam generator exit at 4 Mpa and 500 °C with a mass flow rate of 1 kg/s and a condenser exit temperature of 45 °C. The turbine efficiency is 85%. Find the pump power, turbine power, net power produced, rate of heat transfer added in the boiler, rate of heat transfer removed in the condenser, and the cycle efficiency.
ANSWER: -4.03 kW, 967.5 kW, 963.5 kW, 3138 kW, -2174 kW, 30.71%.
12. In a steam Rankine power plant, the boiler exit conditions are 4 Mpa and 450°C, and the condenser pressure is 15 kPa. At a particular part-load operation, the turbine inlet pressure is purposely reduced by a throttle valve to 3 Mpa. How does this change the thermal efficiency of the cycle and, if so, by how much.
13. In a steam Rankine power plant, the boiler exit conditions are 600 psia and 600°F, and the condenser pressure is 5 psia. At a particular part-load operation, the turbine

inlet pressure is purposely reduced by a throttle valve to 550 psia. How does this change the thermal efficiency of the cycle and, if so, by how much.

14. In a steam Rankine power plant, the boiler exit conditions are 4 Mpa and 450°C, and the condenser pressure is 15 kPa. The turbine efficiency is 80%. At a particular part-load operation, the turbine inlet pressure is purposely reduced by a throttle valve to 3 Mpa. How does this change the thermal efficiency of the cycle and, if so, by how much.

8.5. REHEAT RANKINE CYCLE

The thermal efficiency of the Rankine cycle can be significantly increased by using higher boiler pressure. But this requires ever-increasing superheats. Since the maximum temperature in the super-heater is limited by the temperature the boiler tubes can stand, super-heater temperatures are usually restricted. Since the major fraction of the heat supplied to Rankine cycle is supplied in the boiler, the boiler temperatures (and hence pressures) must be increased if cycle efficiency improvements are to be obtained.

The problem of excessive super-heater temperatures may be solved while avoiding two-phase saturated mixtures in the expansion by reheating the expanding steam part way through the expansion as shown in Figure 8.5.1. The steam leaving the boiler section as saturated vapor is superheated to an acceptable temperature and then expanded (while produce work) until it intersects with the maximum moisture (complement of quality, or minimum quality) curve. The steam is then reheated in a second super-heater section and expanded in a second turbine (while produce more work) until it intersects with the maximum moisture (complement of quality, or minimum quality) curve again. The steam is then condensed and pump back into the boiler.

The one *reheat Rankine basic cycle* is composed of the following six processes:

1-2 isentropic compression
2-3 isobaric heat addition
3-4 isentropic expansion
4-5 isobaric heat addition
5-6 isentropic expansion
6-1 isobaric heat removing

The T-S diagram of the reheat Rankine cycle is shown in Figure 8.5.2.

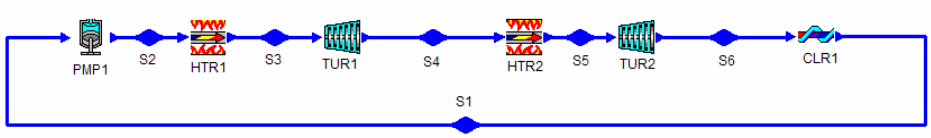

Figure 8.5.1. Reheat Rankine cycle

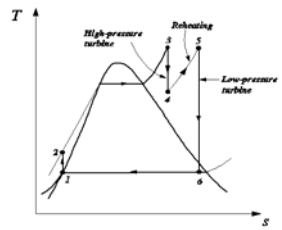

Figure 8.5.2. Reheat Rankine T-S diagram

Applying the First law of thermodynamics of the open system to each of the six processes of the reheat Rankine cycle yields:

$$Q_{12} = 0 \tag{8.5.1}$$

$$W_{12} = m(h_1 - h_2) = mv_1 (p_1 - p_2) \tag{8.5.2}$$

$$W_{23} = 0 \tag{8.5.3}$$

$$Q_{23} - 0 = m(h_3 - h_2) \tag{8.5.4}$$

$$Q_{34} = 0 \tag{8.5.5}$$

$$W_{34} = m(h_3 - h_4) \tag{8.5.6}$$

$$W_{45} = 0 \tag{8.5.7}$$

$$Q_{45} - 0 = m(h_5 - h_4) \tag{8.5.8}$$

$$Q_{56} = 0 \tag{8.5.9}$$

$$W_{56} = m(h_5 - h_6) \tag{8.5.10}$$

$$W_{61} = 0 \tag{8.5.11}$$

and

$$Q_{61} - 0 = m(h_1 - h_6) \tag{8.5.12}$$

The net work (W_{net}), which is also equal to net heat (Q_{net}), is

$$W_{net} = Q_{net} = Q_{23} + Q_{45} + Q_{61} \tag{8.5.13}$$

The thermal efficiency of the cycle is

$$0 = W_{net} /(Q_{23} + Q_{45}) = Q_{net} /(Q_{23} + Q_{45}) = 1- Q_{61} /(Q_{23} + Q_{45})$$
$$=1- (h_6 - h_1)/[(h_3 - h_2) +(h_5 - h_4)] \quad (8.5.14)$$

Example 8.5.1.

A steam reheat Rankine cycle operates between the pressure limits of 5 psia and 1600 psia. Steam is superheated to 600EF before it is expanded to the reheat pressure of 500 psia. Steam is reheated to 600EF. The steam flow rate is 800 lbm/h. Determine the quality of steam at the exit of the turbine, the cycle efficiency, and the power produced by the cycle.

To solve this problem by CyclePad, we take the following steps:

1. Build
   (A) Take a pump, a boiler, a turbine, a re-heater, another turbine and a condenser from the inventory shop and connect the devices to form the reheat Rankine cycle.
   (B) Switch to analysis mode.
2. Analysis
   (A) Assume a process each for the six devices: (a) pump as adiabatic, (b) boiler and reheater as isobaric, (c) turbines as adiabatic, and (d) condenser as isobaric.
   (B) Input the given information: (a) working fluid is water, (b) the inlet pressure and quality of the pump are 5 psia and 0, (c) the inlet pressure and temperature of the first turbine are 1600 psia and 600EF, (d) the mass flow rate is 800 lbm/h, and (e) the inlet pressure and temperature of the first turbine are 500 psia and 600EF.
3. Display results
   (A) Display the cycle properties results. The cycle is a heat engine. The answers are x=82.52 %, 0=30.04 % and Net power output=111.4 hp.

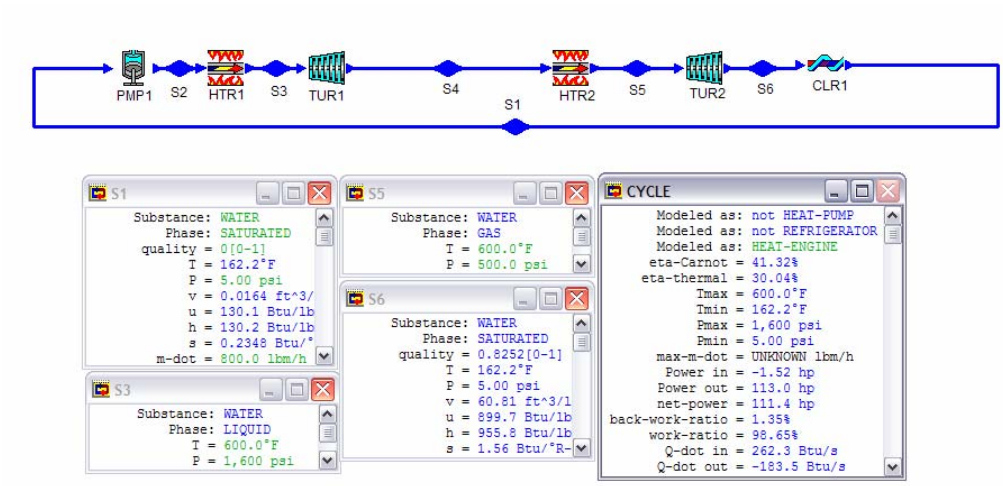

Figure E8.5.1. Reheat Rankine cycle

Comments: The sole purpose of the reheat cycle is to reduce the moisture content of the steam at the final stage of the turbine expansion process. The more reheating process, the higher the quality of the steam at the exit of the last stage turbine. The reheat temperature is often very close or equal to the turbine inlet temperature. The optimum reheat pressure is about one-fourth of the maximum cycle pressure.

Example 8.5.2.

Determine the efficiency and power output of a reheat Rankine cycle (Figure E8.5.2) using steam as the working fluid in which the condenser pressure is 80 kPa. The boiler pressure is 3 MPa. The steam leaves the boiler at 400EC. The mass flow rate of steam is 1 kg/s. The pump efficiency is 85% and the turbine efficiency is 88%. After expansion in the high-pressure turbine to 800 kPa, the steam is reheated to 400EC and then expanded in the low-pressure turbine to the condenser.

To solve this problem by CyclePad, we take the following steps:

1. Build
   (A) Take a pump, a boiler, a turbine, a re-heater, another turbine and a condenser from the inventory shop and connect the devices to form the reheat Rankine cycle.
   (B) Switch to analysis mode.
2. Analysis
   (A) Assume a process each for the six devices: (a) pump as adiabatic, (b) boiler and reheater as isobaric, (c) turbines as adiabatic, and (d) condenser as isobaric.
   (B) Input the given information: (a) working fluid is water, (b) the inlet pressure and quality of the pump are 80 kPa and 0, (c) the inlet pressure and temperature of the turbine are 3 MPa and 400EC, (d) the mass flow rate is 1 kg/s, and (e) the pump efficiency is 85% and the turbines efficiency are 88%.
3. Display results
   (A) Display the cycle properties results. The cycle is a heat engine. The answers are 0=24.57% and Net power output=779.9 kW.

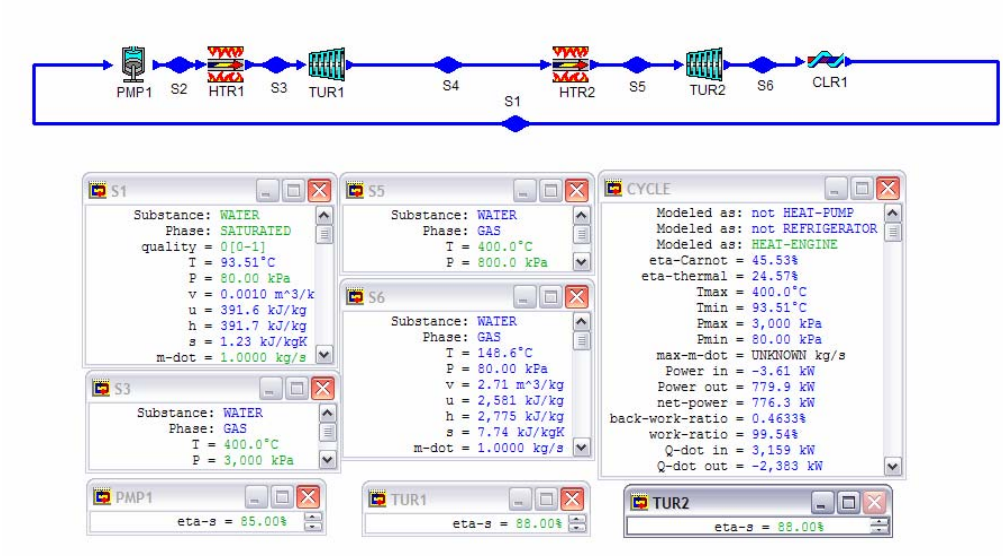

Figure E8.5.2. Reheat Rankine cycle

Comment: The advantage of using reheat is to reduce the moisture content at the exit of the low pressure turbine and increase the net power of the Rankine power plant. The one reheat Rankine basic cycle shown in Figure 8.5.1 can be expanded into more than one reheat if desired. In this fashion it is possible to use higher boiler pressure without having to increase the maximum superheater temperature above the limit of the superheater tubes.

Homework 8.5. Reheat Rankine Cycle

1. What is the purpose of reheat in a reheat Rankine cycle?
2. The reheat cycle causes two things to differ from the basic Rankine cycle.
3. Indicate what the two benefits of a reheat cycle are.
4. Show the ideal Rankine cycle with one stage of reheating on a T-s diagram. Assume the inlet temperature for all stage turbine is the same. How does the total turbine work change with reheat?
5. Show the ideal Rankine cycle with four stages of reheating on a T-s diagram. Assume the inlet temperature for all stage turbine is the same. How does the total turbine work change with reheat?
6. How do turbine output work, heat supplied, heat rejected, moisture content at turbine exit, and cycle efficiency change when a Rankine cycle is modified with reheating?
7. What limits the number of reheats that are used in a given Rankine cycle?
8. Is the efficiency of a reheat Rankine cycle always higher than the efficiency of a simple Rankine cycle operating between the same boiler pressure and condenser pressure?
9. Consider a steam power plant operating on the ideal reheat Rankine cycle. 1 kg/s of steam flow enters the high-pressure turbine at 15 MPa and 600EC and leaves at 5 MPa. Steam is reheated to 600EC and enters the low-pressure turbine. Exhaust steam from the turbine is condensed in the condenser at 10 kPa. Determine (A) the pump

power required, (B) rate of heat added in the boiler, (C) rate of heat added in the re-heater, (D) power produced by the high-pressure turbine, (E) power produced by the low-pressure turbine, (F) rate of heat removed from the condenser, (G) quality of steam at the exit of the low-pressure turbine, and (H) the thermal cycle efficiency.
ANSWER: (A) -15.14 kW, (B) 3375 kW, (C) 449.6 kW, (D) 364.9 kW, (E) 1366 kW, (F) -2108 kW, (G) 0.8814, (H) 44.87%.

10. Consider a steam power plant operating on the ideal reheat Rankine cycle. 1 kg/s of steam flow enters the high-pressure turbine at 15 MPa and 600EC and leaves at 5 MPa. Steam is reheated to 600EC and enters the low-pressure turbine. Exhaust steam from the turbine is condensed in the condenser at 10 kPa. Both turbines have 90% efficiency. Determine (A) the pump power required, (B) rate of heat added in the boiler, (C) rate of heat added in the re-heater, (D) power produced by the high-pressure turbine, (E) power produced by the low-pressure turbine, (F) rate of heat removed from the condenser, (G) quality of steam at the exit of the low-pressure turbine, and (H) the thermal cycle efficiency.
ANSWER: (A) -15.14 kW, (B) 3375 kW, (C) 413.1 kW, (D) 328.4 kW, (E) 1230 kW, (F) -2245 kW, (G) 0.9385, (H) 40.73%.
11. Steam leaves the boiler and enters the turbine at 1500 psia, 600EF and 0.2 lbm/s. After expansion in the turbine to 500 psia, the steam is reheated to 600EF and then expanded in the low-pressure turbine to 2 psia. Both turbine efficiency are 85%. Determine the thermal efficiency, power input, power output, net power output, rate of heat added, and rate of heat removed of the cycle.
ANSWER: 31.38%, -1.27 hp, 114 hp, 112.8 hp, 254.0 Btu/s, -174.3 Btu/s.
12. Steam leaves the boiler and enters the turbine at 1500 psia, 600EF and 0.2 lbm/s. After expansion in the turbine to 500 psia, the steam is reheated to 600EF and then expanded in the low-pressure turbine to 2 psia. Both turbine efficiency are 88%. Determine the thermal efficiency, power input, power output, net power output, rate of heat added, and rate of heat removed of the cycle.
ANSWER: 32.44%, -1.27 hp, 118.1 hp, 116.8 hp, 254.5 Btu/s, -171.9 Btu/s.
13. Steam leaves the boiler and enters the turbine at 1500 psia, 500EF and 0.2 lbm/s. After expansion in the turbine to 500 psia, the steam is reheated to 500EF and then expanded in the low-pressure turbine to 2 psia. Both turbine efficiency are 82%. Determine the thermal efficiency, power input, power output, net power output, rate of heat added, and rate of heat removed of the cycle.
ANSWER: 26.11%, -1.27 hp, 85.11 hp, 83.84 hp, 227.0 Btu/s, -167.7 Btu/s.
14. Consider an ideal steam reheat Rankine cycle in which the steam enters the high-pressure turbine at 600 psia, 700EF and 0.5 lbm/s, and then expands to 200 psia. It is then reheated to 700EF and expands to 2 psia in the low-pressure turbine. Find the quality of steam leaving the low-pressure turbine, thermal efficiency, power input, power output, net power output, rate of heat added, and rate of heat removed of the cycle.
ANSWER: 0.8913, 34.92%, -1.28 hp, 347.0 hp, 345.7 hp, 699.7 Btu/s, -445.3 Btu/s.
15. Consider a steam reheat Rankine cycle in which the steam enters the high-pressure turbine at 600 psia, 700EF and 0.5 lbm/s, and then expands to 200 psia. It is then reheated to 700EF and expands to 2 psia in the low-pressure turbine. Both turbine

efficiency are 84%. Find the quality of steam leaving the low-pressure turbine, thermal efficiency, power input, power output, net power output, rate of heat added, and rate of heat removed of the cycle.
ANSWER: 0.9491, 29.73%, -1.28 hp, 291.5 hp, 290.2 hp, 690.0 Btu/s, -484.9 Btu/s.

16. Consider a steam reheat Rankine cycle in which the steam enters the high-pressure turbine at 4000 kPa, 380EC and 0.3 kg/s, and then expands to 1000 kPa. It is then reheated to 380EC and expands to 12 kPa in the low-pressure turbine. Both turbine efficiency are 84%. Find the quality of steam leaving the low-pressure turbine, thermal efficiency, power input, power output, net power output, rate of heat added, and rate of heat removed of the cycle.
ANSWER: 0.9646, 30.18%, -1.22 kW, 299.4 kW, 298.2 kW, 987.9 kW, -689.7 kW.
17. Consider a steam reheat Rankine cycle in which the steam enters the high-pressure turbine at 5000 kPa, 400EC and 1.4 kg/s, and then expands to 1000 kPa. It is then reheated to 400EC and expands to 10 kPa in the low-pressure turbine. Both turbine efficiency are 100%. Find the quality of steam leaving the low-pressure turbine, thermal efficiency, power input, power output, net power output, rate of heat added, and rate of heat removed of the cycle.
ANSWER: 0.9089, 37.12%, -7.11 kW, 1804 kW, 1797 kW, 4840 kW, -3044 kW.

8.6. REGENERATIVE RANKINE CYCLE

The thermal efficiency of the Rankine cycle can be increased by the use of regenerative heat exchange as shown in Figure 8.6.1. In the regenerative cycle, a portion of the partially expanded steam is drawn off between the high- and low-pressure turbines. The steam is used to preheat the condensed liquid before it returned to the boiler. In this way, the amount of heat added at the low temperatures is reduced. Therefore the mean effective temperature of heat addition is increased, and cycle efficiency is increased. In the case of an ideal regenerative Rankine cycle, the best result is obtained by heating the feed-water to a temperature equal to the saturation temperature corresponding to the boiler pressure. To carry out the ideal regenerative process, the regenerative heat exchanger is called feed-water heater. The T-s diagram of the ideal *regenerative Rankine cycle* is shown in Figure 8.6.2.

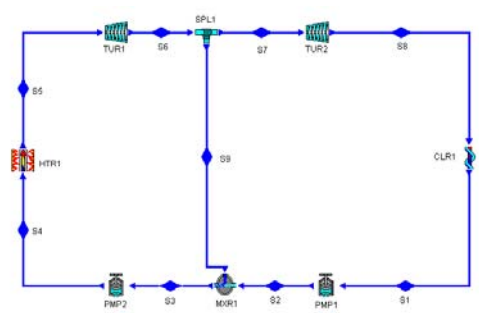

Figure 8.6.1. Regenerative Rankine cycle

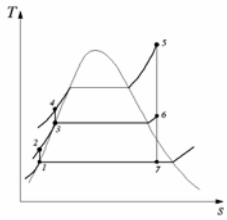

Figure 8.6.2. Regenerative Rankine cycle T-S diagram

The one regenerative Rankine basic cycle is composed of the following seven processes:

1-2 isentropic compression
2-3 isobaric heat addition
3-4 isentropic compression
4-5 isobaric heat addition
5-6 isentropic expansion
6-7 isentropic expansion
7-1 isobaric heat removing

Applying the mass balance and the First law of thermodynamics of the open system to each of the seven processes of the regenerative Rankine cycle yields:

$$m_1=m_2=m_7 \tag{8.6.1}$$

$$m_4=m_5 \tag{8.6.2}$$

$$m_4 = m_2 + m_6 \tag{8.6.3}$$

$$Q_{12} = 0 \tag{8.6.4}$$

$$W_{12} = m_1(h_1 - h_2) = m_1v_1 (p_1 - p_2) \tag{8.6.5}$$

$$m_4(h_4 - h_3) + m_2(h_2 - h_3)+m_6(h_6 - h_3) = 0 \tag{8.6.6}$$

$$Q_{34} = 0 \tag{8.6.7}$$

$$W_{34} = m_4(h_3 - h_4) = m_4v_3 (p_3 - p_4) \tag{8.6.8}$$

$$W_{45} = 0 \tag{8.6.9}$$

$$Q_{45} - 0 = m_4(h_5 - h_4) \tag{8.6.10}$$

$$Q_{56} = 0 \tag{8.6.11}$$

$$W_{56} = m_4(h_3 - h_4) \quad (8.6.12)$$

$$Q_{67} = 0 \quad (8.6.13)$$

$$W_{67} = m_1(h_6 - h_7) \quad (8.6.14)$$

$$W_{71} = 0 \quad (8.6.15)$$

and

$$Q_{71} - 0 = m_1(h_1 - h_6) \quad (8.6.16)$$

The net work (W_{net}), which is also equal to net heat (Q_{net}), is

$$W_{net} = W_{56} + W_{67} + W_{12} + W_{34} \quad (8.6.17)$$

The thermal efficiency of the cycle is

$$0 = W_{net} / Q_{45} \quad (8.6.18)$$

Example 8.6.1.

Determine the efficiency and power output of a regenerative Rankine cycle using steam as the working fluid and the condenser pressure is 80 kPa. The boiler pressure is 3 MPa. The steam leaves the boiler at 400EC. The mass rate of steam flow is 1 kg/s. The pump efficiency is 85% and the turbine efficiency is 88%. After expansion in the high-pressure turbine to 400 kPa, some of the steam is extracted from the turbine exit for the purpose of heating the feed-water in an open feed-water heater, the rest of the steam is reheated to 400EC and then expanded in the low-pressure turbine to the condenser. The water leaves the open feed-water heater at 400 kPa as saturated liquid. Determine the steam fraction extracted from the turbine exit, cycle efficiency, and net power output of the cycle. Draw the sensitivity diagram of cycle efficiency vs re-heater pressure

To solve this problem by CyclePad, we take the following steps:

1. Build
   (A) Take two pumps, a boiler, a turbine, a re-heater, another turbine, a splitter, a mixing chamber (open feed-water heater) and a condenser from the inventory shop and connect the devices to form the regenerating Rankine cycle.
   (B) Switch to analysis mode.
2. Analysis
   (A) Assume a process for each of the devices: (a) pumps as adiabatic, (b) boiler and reheater as isobaric, (c) turbines as adiabatic, (d) splitter as iso-parametric, and (e) condenser as isobaric.
   (B) Input the given information: (a) working fluid is water, (b) the inlet pressure and quality of the pump are 80 kPa and 0, (c) the inlet pressure and temperature of

the turbine are 3 MPa and 400EC, (d) the mass flow rate is 1 kg/s through the boiler, and (e) the pump efficiency is 85% and the turbines efficiency is 88%.

3. Display results

(A) Display the cycle properties results. The cycle is a heat engine. The answers are fraction extraction=0.0877, 0=24.28% and Net power output=636.8 kW, (B) Display the sensitivity diagram of cycle efficiency vs re-heater pressure, and (C) Locate the optimum regeneration pressure (about 730 kPa) from the sensitivity diagram, (D) Redo the problem with regenerator pressure at 730 kPa, the answers are: fraction extraction=0.1233, 0=24.42% and net power output=616.1 kW

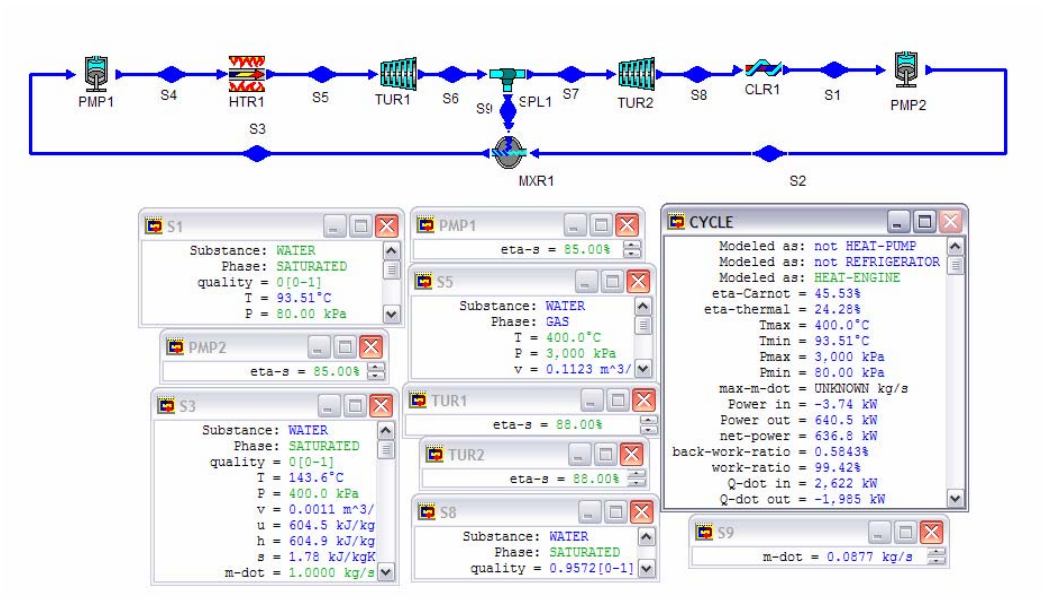

Figure E8.6.1a. Regenerative Rankine cycle

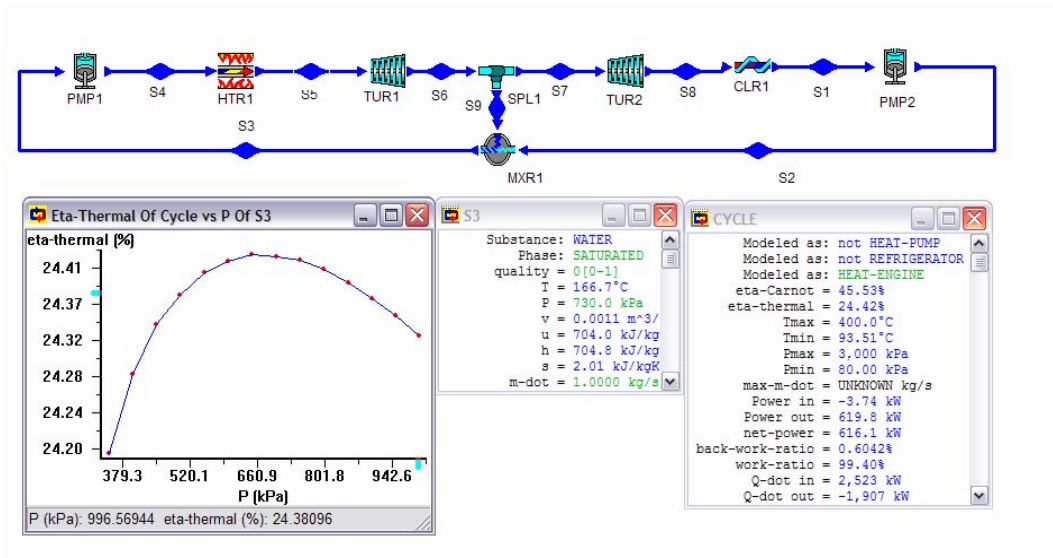

Figure E8.6.1b. Regenerative Rankine cycle

Comments: (1) From the example, it is seen that the efficiency of the regenerative Rankine cycle is better than the efficiency of the Rankine cycle without regenerator. (2) Suppose infinitive number of regenerators are used, the regenerative cycle would have the same cycle efficiency as that of a Carnot cycle operating between the same temperature limits. This is physically not practical. Large number of regenerators may not be economically justified. Consequently, the finite number of regenerators is a design decision. In practice, six or seven regenerators is the maximum number employed for huge Rankine commercial power plants.

Example 8.6.2.

Determine the efficiency and power output of an ideal regenerative Rankine (without super-heater or re-heater) cycle using steam as the working fluid in which the condenser temperature is 50EC. The boiler temperature is 350EC. The steam leaves the boiler as saturated vapor. The mass rate of steam flow is 1 kg/s. After expansion in the high-pressure turbine to 100EC, some of the steam is extracted from the turbine exit for the purpose of heating the feed-water in an open feed-water heater, the rest of the steam is then expanded in the low-pressure turbine to the condenser. The water leaves the open feed-water heater at 100EC as saturated liquid. (A) Determine the steam fraction extracted from the turbine exit, cycle efficiency, and net power output of the cycle, (B) Plot the sensitivity diagram of cycle efficiency vs open feed-water heater temperature, and (C) Determine the steam fraction extracted from the turbine exit, cycle efficiency, and net power output of the cycle at the optimal cycle efficiency.

To solve this problem by CyclePad, we take the following steps:

1. Build

(A) Take two pumps, a boiler, two turbines, a re-heater, a splitter, a mixing chamber (open feed-water heater) and a condenser from the inventory shop and connect the devices to form the regenerating Rankine cycle.

(B) Switch to analysis mode.

2. Analysis

(A) Assume a process each for the devices: (a) pumps as adiabatic, (b) boiler as isobaric, (c) turbines as adiabatic, (d) splitter as iso-parametric, and (e) condenser as isobaric.

(B) Input the given information: (a) working fluid is water, (b) the inlet temperature and quality of the pump are 50EC and 0, (c) the turbine inlet steam quality and temperature are 1 and 350EC, (d) the mass flow rate is 1 kg/s through the boiler, and (e) the regenerator exit steam quality and temperature are 0 and 100EC.

3. Display results

(A) Display the cycle properties results. The cycle is a heat engine. The answers are fraction extraction=0.1258, 0=40.16% and net power output=871.4 kW.

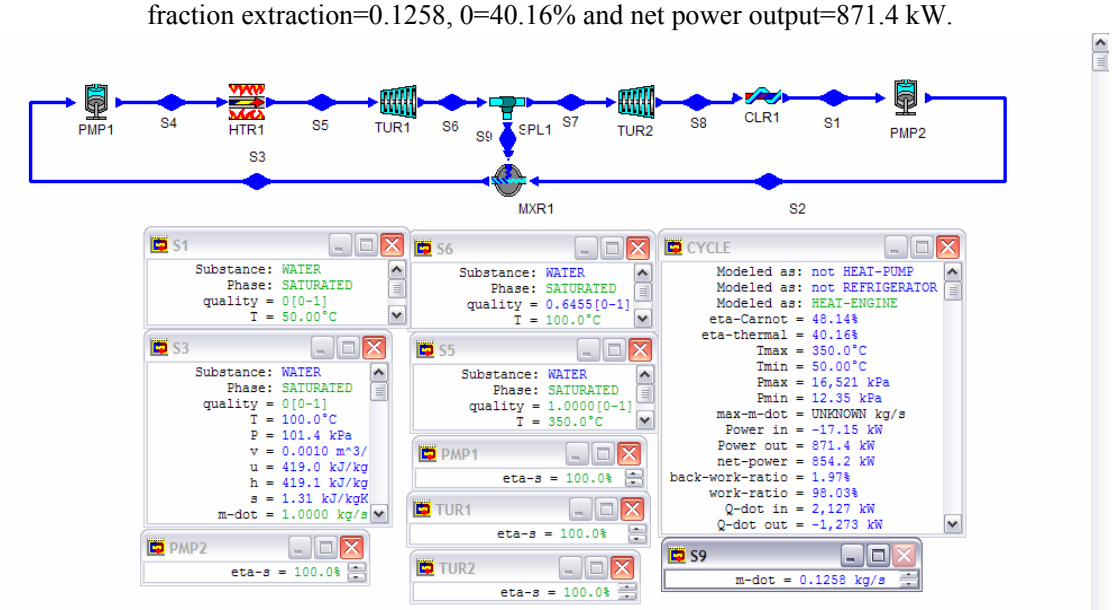

Figure E8.6.2a. Regenerative Rankine cycle

(B) The sensitivity diagram of cycle efficiency vs open feed-water heater temperature (0 vs T_3) is

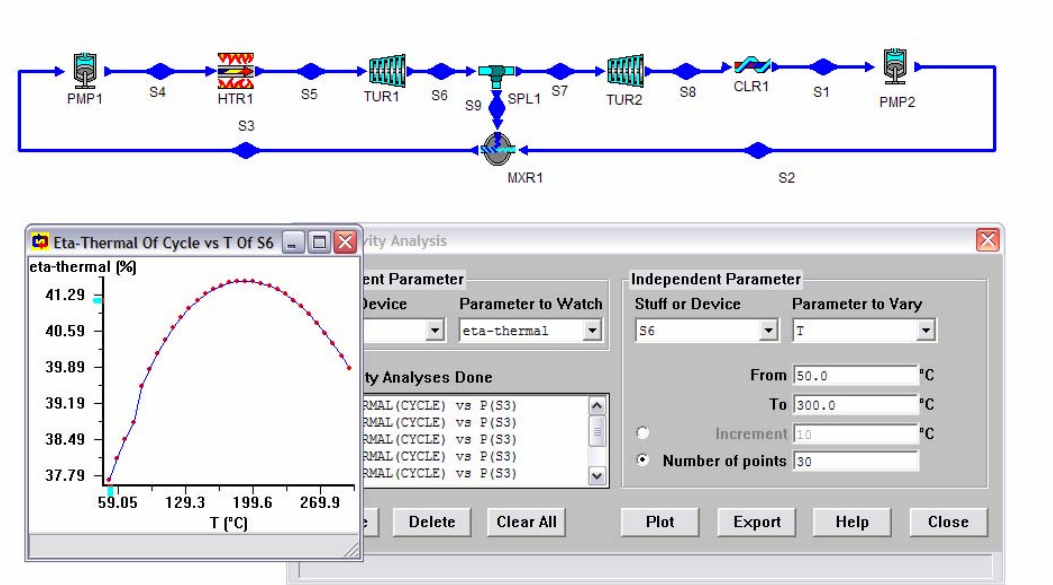

Figure E8.6.2b. Regenerative Rankine cycle sensitivity diagram

Comment: The temperature difference between condenser and regenerator is approximately equal to the temperature difference between boiler and regenerator. From the diagram, the temperature is approximately 187EC.

(C) Change the temperature of water leaving the open feed-water heater to 187EC as saturated liquid. Answers given by the cycle properties are: fraction extraction=0.2970, 0=41.55% and net power output=727.9 kW.

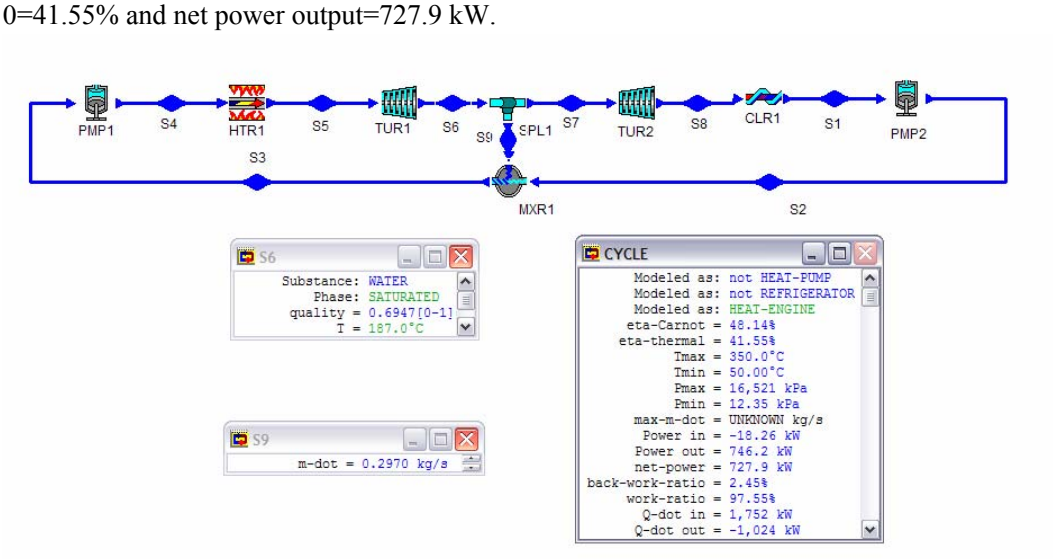

Figure E8.6.2c. Regenerative Rankine cycle optimization

Example 8.6.3.

Determine the efficiency and power output of a 4-stage steam regenerative Rankine cycle (Figure E8.6.3a). The following information is provided:

$p_1=p_{24}=10$ kPa, $p_2=p_3=p_{21}=p_{22}=p_{23}=p_{28}=3000$ kPa, $p_4=p_5=p_{18}=p_{19}=p_{20}=p_{27}=7000$ kPa, $p_6=p_7=p_{15}=p_{16}=p_{17}=p_{26}=10000$ kPa, $p_8=p_9=p_{12}=p_{13}=p_{14}=p_{25}=13000$ kPa, $p_{10}=p_{11}=16000$ kPa, $T_{11}=T_{14}=T_{17}=T_{20}=T_{23}=400$EC, $x_1=x_3=x_5=x_7=x_9=0$, $mdot_9=1$ kg/s, $0_{tur1}=0_{tur2}=0_{tur3}=0_{tur4}=0_{tur5}=85\%$, and $0_{pmp1}=0_{pmp2}=0_{pmp3}=0_{pmp4}=0_{pmp5}=85\%$.

To solve this problem by CyclePad, we take the following steps:

1. Build
   (A) Take five pumps, five heaters (1 boiler and 4 reheaters), five turbines, four splitters, four mixing chambers (open feed-water heaters) and a condenser from the inventory shop and connect the devices to form the regenerating Rankine cycle.
   (B) Switch to analysis mode.
2. Analysis
   (A) Assume a process each for the devices: (a) pumps as adiabatic, (b) boiler, reheater and regenerators as isobaric, (c) turbines as adiabatic, (d) splitters as isoparametric, and (e) condenser as isobaric.
   (B) Input the given information: working fluid is water, $p_1=p_{24}=10$ kPa, $p_2=p_3=p_{21}=p_{22}=p_{23}=p_{28}=3000$ kPa, $p_4=p_5=p_{18}=p_{19}=p_{20}=p_{27}=7000$ kPa, $p_6=p_7=p_{15}=p_{16}=p_{17}=p_{26}=10000$ kPa, $p_8=p_9=p_{12}=p_{13}=p_{14}=p_{25}=13000$ kPa, $p_{10}=p_{11}=16000$ kPa, $T_{11}=T_{14}=T_{17}=T_{20}=T_{23}=400$EC, $x_1=x_3=x_5=x_7=x_9=0$, $mdot_9=1$ kg/s, $0_{tur1}=0_{tur2}=0_{tur3}=0_{tur4}=0_{tur5}=85\%$, and $0_{pmp1}=0_{pmp2}=0_{pmp3}=0_{pmp4}=0_{pmp5}=85\%$ as shown in Figure E8.6.3b.

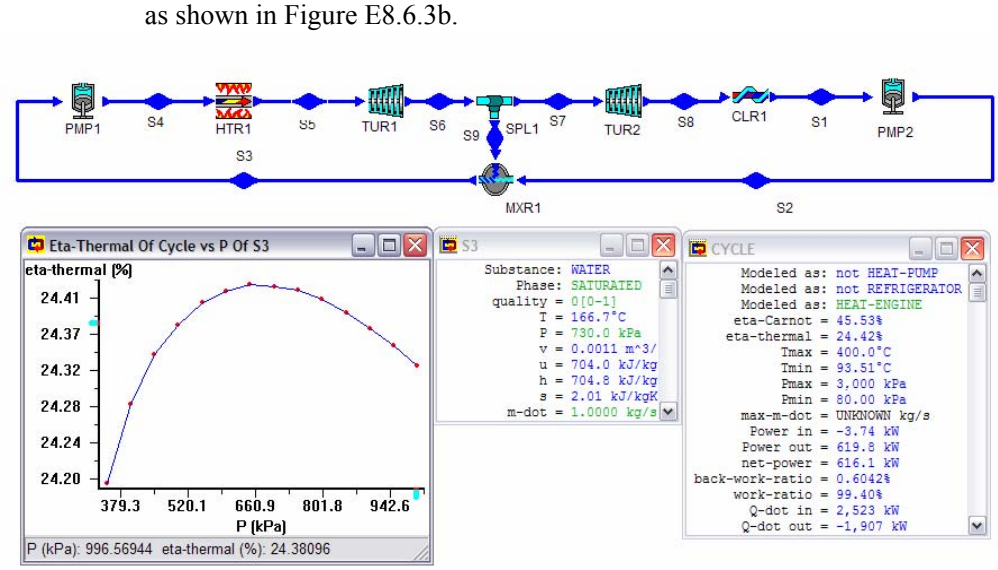

Figure E8.6.3a. 4-stage steam regenerative Rankine cycle

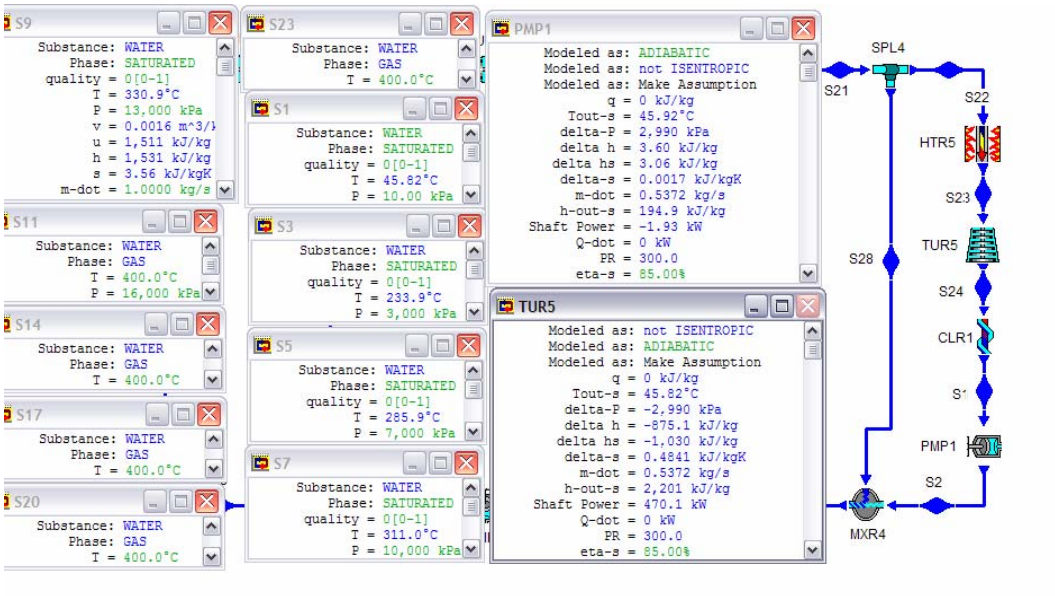

Figure E8.6.3b. 4-stage steam regenerative Rankine cycle input

3. Display results

(A) Display the cycle properties results. The cycle is a heat engine. The results are:

0_{cycle}=36.92%, $Wdot_{input}$=-97.09 kW, $Wdot_{output}$=-777.3 kW, $Wdot_{net\ output}$=680.2 kW, $Qdot_{add}$=1842 kW, $Qdot_{remove}$=-1162 kW, $Wdot_{pmp1}$=-44.23 kW, $Wdot_{pmp2}$=-42.45 kW, $Wdot_{pmp3}$=-4.14 kW, $Wdot_{pmp4}$=-4.33 kW, $Wdot_{pmp5}$=-1.93 kW, $Wdot_{tur1}$=39.74 kW, $Wdot_{tur2}$=50.45 kW, $Wdot_{tur3}$=69.28 kW, $Wdot_{tur4}$=147.7 kW, $Wdot_{tur5}$=470.1 kW, $Qdot_{htr1}$=1372 kW, $Qdot_{htr2}$=112.8 kW, $Qdot_{htr3}$=107.2 kW, $Qdot_{htr4}$=107.2 kW, $Qdot_{htr5}$=143.5 kW, $Qdot_{clr1}$=-1162 kW, $mdot_2$=$mdot_{22}$=0.5372 kg/s, $mdot_3$=$mdot_{19}$=0.7605 kg/s, $mdot_5$=$mdot_{16}$=0.8705 kg/s, $mdot_8$=$mdot_{12}$=0.9459 kg/s, $mdot_{25}$=0.0541 kg/s, $mdot_{26}$=0.0754 kg/s, $mdot_{27}$=0.1100 kg/s, and $mdot_{28}$=0.2234 kg/s.

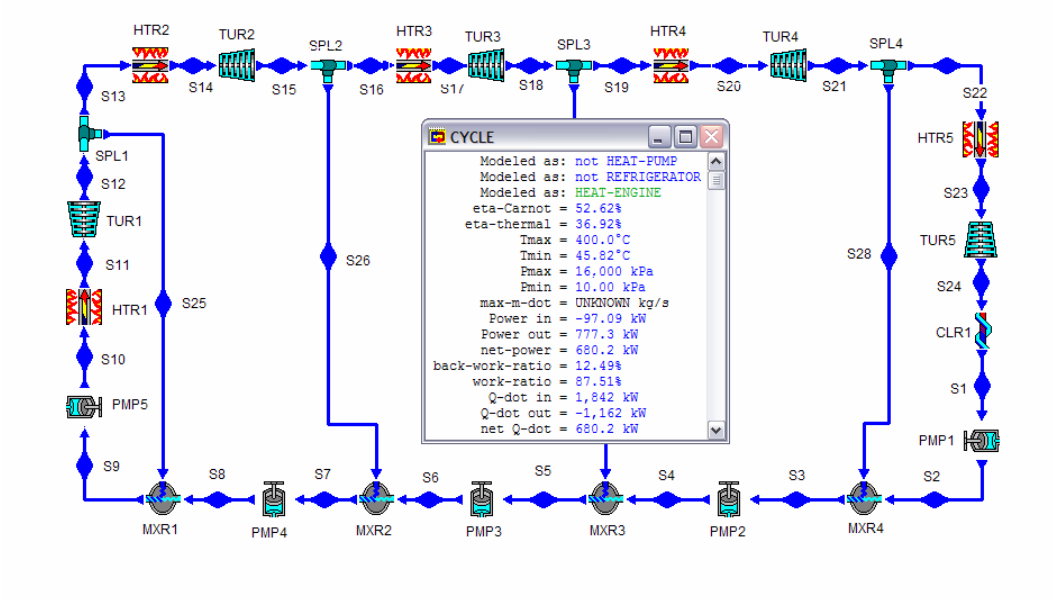

Figure E8.6.3c. 4-stage steam regenerative Rankine cycle output

Homework 8.6. Regenerative Rankine Cycle

1. What is the purpose of regeneration in a regenerative Rankine cycle?
2. Sketch T-s diagrams for the following cycles:
   (A) a reversible basic Rankine cycle.
   (B) an irreversible basic Rankine cycle.
   (C) a reversible Rankine cycle with reheat.
   (D) an irreversible Rankine cycle with reheat.
   (E) a reversible Rankine cycle with regenerator and open-type feedwater heater.
   (F) a reversible Rankine cycle with two stages of reheat.
3. The regenerative cycle has the potential of achieving the Carnot cycle efficiency when operated between the same upper and lower temperatures. Describe what is being done in the regenerative cycle that brings this about.
4. How do turbine work, heat supplied, heat rejected, moisture content at turbine exit, and cycle efficiency change when an ideal Rankine cycle is modified with regeneration?
5. A junior engineer proposes to have some steam extracted from a high pressure turbine to heat the liquid water leaving the pump to the boiler as a preheater. This does not seem to be a smart thing to do since the extracted high pressure steam could produce some more work in the low pressure turbine. How do you justify this proposal?
6. What is the quality of steam at the exit of an open feedwater heater?
7. Why the quality of steam at the exit of an open feedwater heater is 0?
8. What factor limits the number of heaters used in the regenerator?

9. In the regenerative Rankine cycle, steam is extracted from the high pressure turbine for feed water heating. What is the effect on the following compared to values in the simple Rankine cycle?
   (A) Thermal cycle efficiency: (a) greater (b) less (c) same
   (B) Energy per unit mass leaving the boiler: (a) greater (b) less (c) same
   (C) Work per unit mass produced by the turbine: (a) greater (b) less (c) same
   (D) Total work produced by the turbine: (a) greater (b) less (c) same
   (E) Heat per unit mass removed by the condenser: (a) greater (b) less (c) same
   (F) Total heat removed by the condenser: (a) greater (b) less (c) same
   (G) Total net work produced by the cycle: (a) greater (b) less (c) same
   (H) Total heat added to the boiler: (a) greater (b) less (c) same
10. Consider a steam power plant operating on the ideal regenerating Rankine cycle. 1 kg/s of steam flow enters the turbine at 15 MPa and 600EC and is condensed in the condenser at 10 kPa. Some steam leaves the high pressure turbine at 1.2 MPa and enters the open feed-water heater. If the steam at the exit of the open feed-water heater is saturated liquid, determine (A) the fraction of steam not extracted from the high pressure turbine, (B) the rate of heat added in the boiler, (C) the rate of heat removed from the condenser, (D) the turbine power produced by the high pressure turbine, (E) the turbine power produced by the low pressure turbine, (F) the power required by the low-pressure pump, (G) the power required by the high-pressure pump, and (H) the thermal cycle efficiency.
    ANSWER: (A) 0.7719 kg/s, (B) 2767 kW, (C) -1484 kW, (D) 733.8 kW, (E) 566.0 kW, (F) -0.9589 kW, (G) -15.71 kW, (H) 46.37%.
11. Consider a steam power plant operating on the ideal regenerating Rankine cycle. 1 kg/s of steam flow enters the turbine at 15 MPa and 600EC and is condensed in the condenser at 10 kPa. Some steam leaves the high pressure turbine at 1.2 Mpa and enters the open feed-water heater. The turbine efficiency is 90%. If the steam at the exit of the open feed-water heater is saturated liquid, determine (A) the fraction of steam not extracted from the high pressure turbine, (B) the rate of heat added in the boiler, (C) the rate of heat removed from the condenser, (D) the turbine power produced by the high pressure turbine, (E) the power required by the high-pressure pump, and (F) the thermal cycle efficiency.
    ANSWER: (A) 0.7780 kg/s, (B) 2767 kW, (C) -1591 kW, (D) 1193 kW, (E) -16.67 kW, (F) 42.49%.
12. Determine the efficiency and power output of a regenerative Rankine (without super-heater or re-heater) cycle using steam as the working fluid in which the condenser temperature is 50EC. The boiler temperature is 350EC. The steam leaves the boiler as saturated vapor. The mass rate of steam flow is 1 kg/s. After expansion in the high-pressure turbine to 100EC, some of the steam is extracted from the turbine exit for the purpose of heating the feed-water in an open feed-water heater, the rest of the steam is then expanded in the low-pressure turbine to the condenser. The water leaving the open feed-water heater at 120EC as saturated liquid. Both turbine efficiency are 85%. (A) Determine the steam fraction extracted from the turbine exit, cycle efficiency, and net power output of the cycle, (B) Plot the sensitivity diagram of cycle efficiency vs open feed-water heater temperature, and (C) Determine the

steam fraction extracted from the turbine exit, cycle efficiency, and net power output of the cycle at the optimal cycle efficiency.
ANSWER: (A) y=0.1605, 0=35.17%, $Wdot_{net}$=718.4 kW; (B) T =187EC; (C) y=0.2884, 0=35.97%, $Wdot_{net}$=630.2 kW.

13. Consider a steam power plant operating on the ideal regenerating Rankine cycle. 1.9 lbm/s of steam flow enters the turbine at 2000 psia and 1000EF and is condensed in the condenser at 2 psia. Some steam leaves the high pressure turbine at 500 psia and enters the open feed-water heater. The turbine efficiency is 90%. If the steam at the exit of the open feed-water heater is saturated liquid, determine (A) the mass flow rate of steam not extracted from the high pressure turbine, (B) power input, (C) power output, (D) net power output, (E) rate of heat added, (F) rate of heat removed, and (G) thermal efficiency of the cycle.
ANSWER: (A) 1.35 lbm/s, (B) -17.55 hp, (C) 1116 hp, (D) 1099 hp, (E) 1937 Btu/s, (F) -1160 Btu/s, (G) 40.11%.
14. Consider a steam power plant operating on the ideal regenerating Rankine cycle. 1.9 lbm/s of steam flow enters the turbine at 2000 psia and 1000EF and is condensed in the condenser at 2 psia. Some steam leaves the high pressure turbine at 500 psia and enters the open feed-water heater. The turbine efficiency is 80%. If the steam at the exit of the open feed-water heater is saturated liquid, determine (A) the mass flow rate of steam not extracted from the high pressure turbine, (B) power input, (C) power output, (D) net power output, (E) rate of heat added, (F) rate of heat removed, and (G) thermal efficiency of the cycle.
ANSWER: (A) 1.36 lbm/s, (B) -17.57 hp, (C) 1009 hp, (D) 991.4 hp, (E) 1937 Btu/s, (F) -1236 Btu/s, (G) 36.18%.
15. Consider an ideal regenerative steam power plant in which steam enters the turbine at 4000 kPa, 370EC and 0.4 kg/s, and exhausts to the condenser at 10 kPa. Steam is extracted from the turbine at 800 kPa for an open feedwater heater. The steam leaves the heater as saturated liquid. Find the thermal efficiency, power input, power output, net power output, heat added, and heat removed of the cycle.
ANSWER: 39.96%, -1.69 kW, 358.9 kW, 357.2 kW, 966.6 kW, -609.4 kW.
16. Consider an ideal regenerative steam power plant in which steam enters the turbine at 5000 kPa, 400EC and 0.7 kg/s, and exhausts to the condenser at 10 kPa. Steam is extracted from the turbine at 1000 kPa for an open feedwater heater. The steam leaves the heater as saturated liquid. Find the thermal efficiency, power input, power output, net power output, heat added, and heat removed of the cycle.
ANSWER: 38.42%, -3.74 kW, 656.7 kW, 652.9 kW, 1700 kW, -1047 kW.
17. Consider an ideal regenerative power plant using steam as the working fluid. Steam leaves the boiler and enters turbine at 700 psia, 700EF and 1.4 lbm/s. After expansion to 145 psia, some of the steam is extracted from the turbine for the purpose of heating the feedwater in an open feedwater heater. The pressure in the feedwater heater is 145 psia and the water leaving it is saturated liquid at 145 psia. The steam not extracted expands to 1.45 psia. Find the thermal efficiency, power input, power output, net power output, heat added, and heat removed of the cycle.
ANSWER: 37.81%, -4.39 hp, 762.0 hp, 757.7 hp, 1416 Btu/s, -880.8 Btu/s.

8.7. LOW-TEMPERATURE RANKINE CYCLES

Much of this chapter has been concerned with various modifications to the simple Rankine cycle at high-temperature. In the following few sections, the Rankine cycle which makes the possible use of energy sources at low-temperature such as solar, geothermal, ocean thermal, solar pond, and waste heat will be discussed. Because of the small temperature range available, only a simple Rankine cycle can be used and the cycle efficiency will be low. This is not critical economically, because the fuel is free.

The working fluids such as ammonia and freons used in refrigerators and heat pumps are more desirable than steam for the very low-temperature Rankine cycles. The reason is that the specific volume of such working fluids at low temperature is much less than that of steam, resulting turbine sizes can be much smaller and less expensive.

The sun provides a direct flux of solar thermal radiation about 1350 kW/m^2 outside the atmospheric air, and about 630 kW/m^2 on the average on the earth's surface. If a flat-platecollector is used, the solar thermal power system is a low-temperature heat engine. If a concentrate collector is used to focus the power of the sun, the *solar thermal heat engine* can be operated at a higher temperature.

All the geothermal heat sources of interest have been created by the intrusion of hot magma from deep in the earth up into rock strata close to surface. The average temperature gradient is small. The regions of interest for geothermal power production are those in which the temperature gradient exceeds 20EC/km. There are regions where geothermal energy in dry-steam form, hot-water form, or hot-rock form could be tapped and used for power generation. More commonly than it puts out dry steam, a geothermal well puts out a mixture of steam and water. A separator is needed to separate the flashing steam from the hot-water. The steam is then used to drive the turbine. In a hot-rock (no steam nor hot water) geothermal well, water will need to be injected into the well to tap the thermal energy. As with the hot-water geothermal energy, a secondary closed, simple Rankine cycle will be required to produce *geothermal power*.

Incident solar energy is absorbed by the surface water of the oceans. The ocean surface temperatures in excess of 26EC occur near the equator. Pure water has a maximum density at a temperature of 4EC. The chilled water tends to settle to the depths of the ocean. The combination of the warmed ocean surface water and cold deep ocean water provides the thermodynamic condition needed to operate a heat engine called *ocean thermal energy conversion* (OTEC). A typical closed-cycle OTEC Rankine cycle using a working fluid such as ammonia or a freon is suggested.

Temperature differences have been found in nature ponds having high concentration gradient of dissolved salt. Solar radiation is absorbed in the lower water levels and at the bottom of the pond. The water near the bottom (70 to 80EC) is at a higher temperature than that of the top surface (30EC), with the density of the hot concentrated lower level water higher than the density of the more dilute and cooler top levels. A typical closed-cycle *solar pond* Rankine cycle using a working fluid such as ammonia or a freon is also suggested.

Waste heat from farming, animal manure, crop production, and municipal solid residues could also be used for power generation.

There is no question that power can be produced from these various natural and waste energy sources. The question is the cost. Significant efforts have been underway for many

years to produce power from these free energy sources. However, there are only a few commercial power plants presently utilizing these energy sources.

Homework 8.7. Low-Temperature Rankine Cycles

1. Is the cycle efficiency of the low-temperature heat engine higher than that of the high-temperature heat engine?
2. What is the fuel cost of the low-temperature heat engine?
3. List at least three low-temperature energy resources.
4. Why working fluids such as ammonia and freons used in refrigerators and heat pumps are more desirable than steam for the low-temperature Rankine cycles?

8.8. SOLAR HEAT ENGINES

The abundance of incident solar energy, particularly in large desert regions with few interruption due to cloud cover, lends to the appeal of solar heat engines. Electrical power produced via thermal conversion of solar energy by means of a conventional Rankine cycle as shown in Figure 8.8.1. The heat exchangers (collectors) in Figure 8.8.1 are operate at different temperatures is technical achievable.

If a flat-plate collector is used, the solar thermal power system is a low-temperature heat engine. The conversion efficiency of a thermodynamic cycle depends upon the collector temperature achieved, i.e., the higher the collector temperature the higher the heat engine efficiency. On the other hand, the collector efficiency also depends upon the collector temperature achieved, i.e., the higher the collector temperature the lower the collector efficiency. Therefore, for a solar-collector-Rankine cycle to operate at high collector efficiency and high heat engine efficiency, the heat input to the solar low-temperature heat engine can be derived from several collectors

Another solar heat engine, suitable for a moderate sized power generating facility, utilizes a concentrate collector (receiver) mounted on top of a high tower. Radiation from the sun is reflected by a field of mirrors onto the receiver to achieve a high concentration ratio. The orientation of each mirror depends upon its location relative to the central receiver. Each mirror is controlled to keep the sun's reflected radiation concentrated on the central receiver. The central receiver can serve as the boiler for the steam Rankine solar heat engine. Thermal storage will be required for a commercial facility to mitigate interruptions caused by clouds and to provide for an evening and nighttime output.

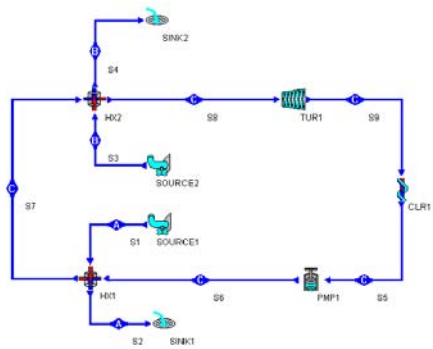

Figure 8.8.1. Solar heat engine

Example 8.8.1.

A solar heat engine with two collectors as shown in Figure 8.8.1 is proposed. Water enters the low-temperature heat exchanger from a low-temperature collector at 120EC and 101 kPa. Water enters the high-temperature heat exchanger from a high-temperature collector at 120EC and leaves the heat exchanger at 100EC and 101 kPa. Cycle water enters the pump of the Rankine heat engine at 8 kPa and 0% quality. Cycle water exits the high-temperature heat exchanger at 100EC. Saturated steam enters the turbine at 1 kg/s and 100EC. Find the power produces by the solar heat engine.

To solve this problem with CyclePad, we take the following steps:

1. Build as shown in Figure 8.8.1.
2. Analysis
   (A) Assume a process each for the five devices: (a) turbine as adiabatic with 100% efficiency, (b) pump as adiabatic with 100% efficiency, (c) low-temperature heat exchanger as isobaric on both hot- and cold-side, (d) high-temperature heat exchanger as isobaric on both hot- and cold-side, and (e) condenser as isobaric process, .
   (B) Input the given information as shown in Figure E8.8.1a: (a) working fluid of cycle is water, (b) inlet quality and pressure of the pump are 0 and 8 kPa, (c) temperature and pressure of the turbine inlet are 100EC and 80 kPa, (d) working fluid of hot-side of the low-temperature heat exchanger is water, (e) mass flow rate is 1 kg/s, (f) inlet temperature and pressure of hot-side fluid are 120EC and 101 kPa, (g) exit temperature of hot-side fluid is 100EC, (h) working fluid of hot-side of the high-temperature heat exchanger is water, and (i) inlet temperature and pressure of hot-side fluid are 200EC and 101 kPa.
3. Display result as shown in Figure E8.8.1a and Figure E8.8.1b.

The answers are: rate of heat added in the low-temperature heat exchanger=2491 kW, rate of heat added in the high-temperature heat exchanger=13.08 kW, net power produced by the Rankine cycle=332.7 kW, and efficiency of the solar heat engine=332.7/(13.08+2491)=13.29%.

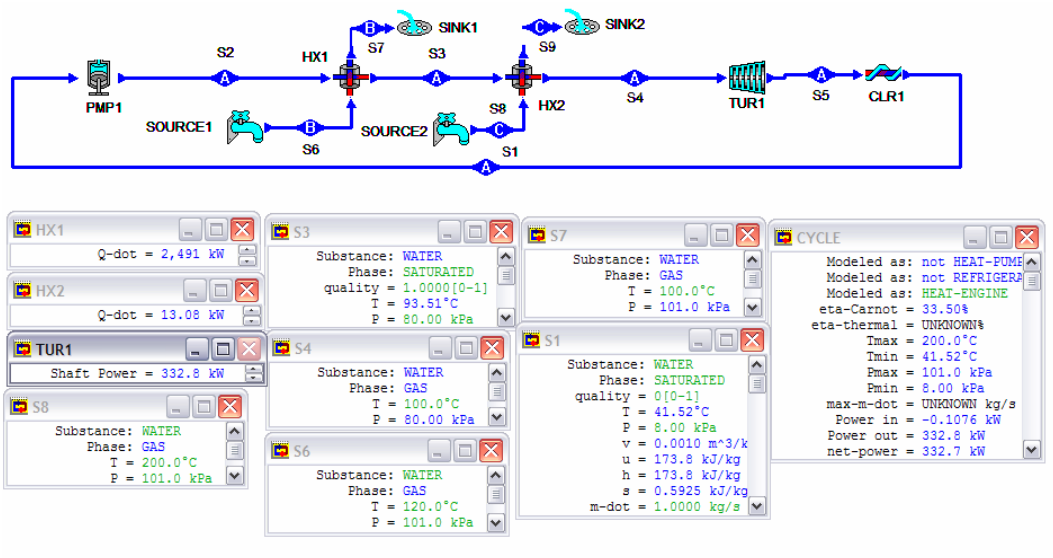

Figure E8.8.1a. Solar heat engine

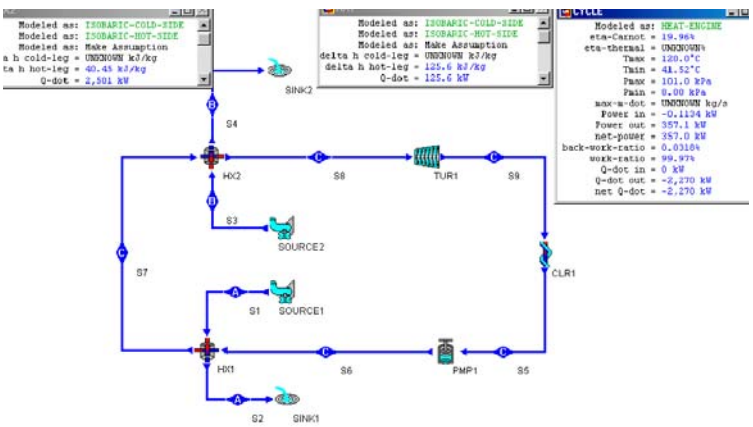

Figure E8.8.1b. Solar heat engine output information

Example 8.8.2.

A solar Rankine heat engine with one concentrated collector used as the boiler is proposed. Saturated water at 1 kg/s enters the pump of the Rankine heat engine at 10 kPa.

Steam enters the turbine at 1000 kPa and 250EC. Find the cycle efficiency and power produces by the solar heat engine.

To solve this problem with CyclePad, we take the following steps:

1. Build a Rankine cycle.
2. Analysis
   (A) Assume a process each for the four devices: (a) turbine as adiabatic with 100% efficiency, (b) pump as adiabatic with 100% efficiency, (c) boiler as isobaric process, and (d) condenser as isobaric process, .
   (B) Input the given information: (a) working fluid of cycle is water, (b) inlet quality and pressure of the pump are 0 and 10 kPa, (c) inlet temperature and pressure of the turbine are 250EC and 1000 kPa, and (d) mass flow rate is 1 kg/s.
3. Display result as shown in Figure E8.8.2.

The answers are: rate of heat added in the boiler=2749 kW, net power produced by the Rankine cycle=747.7 kW, and efficiency of the solar heat engine=27.2%.

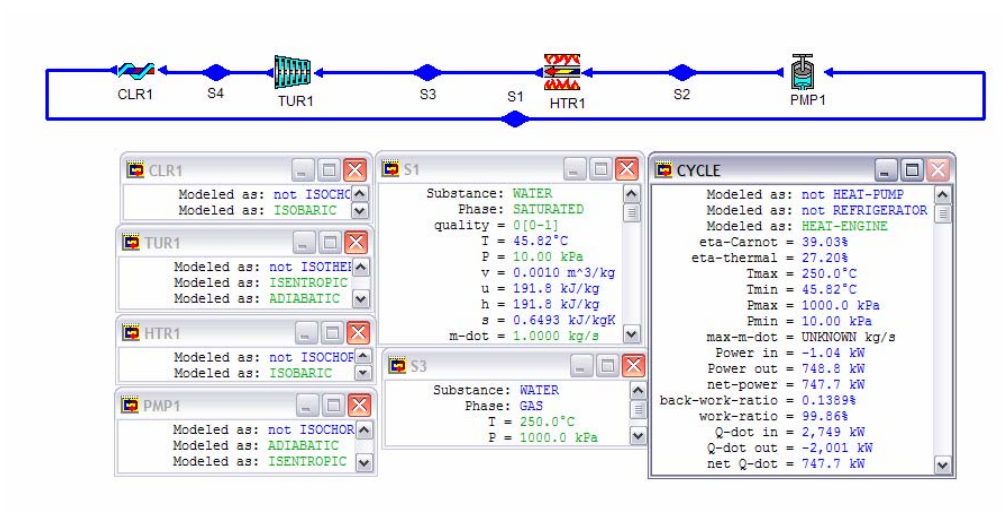

Figure E8.8.2. Solar Rankine heat engine

Homework 8.8. Solar Heat Engine

1. Why several solar collectors at different temperatures are desirable for a solar-collector-Rankine heat engine?
2. A solar heat engine with two collectors is proposed. Water enters the low-temperature heat exchanger from a low-temperature collector at 100EC and 101 kPa. Water enters the high-temperature heat exchanger from a high-temperature collector at 120EC and leaves the heat exchanger at 100EC and 101 kPa. Cycle water enters the pump of the Rankine heat engine at 1 kg/s and 8 kPa. Cycle water enters the high-temperature heat exchanger at 100EC . Saturated steam enters the turbine at 80

kPa. Find the water mass flow rates of the low-temperature collector and the high-temperature collector.

ANSWER: mass flow rates of the low-temperature collector=57.61 kg/s, mass flow rates of the high-temperature collector=57.61 kg/s.

3. A solar heat engine with two collectors is proposed. Water enters the low-temperature heat exchanger from a low-temperature collector at 100EC and 101 kPa. Water enters the high-temperature heat exchanger from a high-temperature collector at 140EC and leaves the heat exchanger at 100EC and 101 kPa. Cycle water enters the pump of the Rankine heat engine at 1 kg/s and 8 kPa. Cycle water enters the high-temperature heat exchanger at 100EC. Saturated steam enters the turbine at 80 kPa. Find the water mass flow rates of the low-temperature collector and the high-temperature collector.

ANSWER: mass flow rates of the low-temperature collector=29 kg/s, mass flow rates of the high-temperature collector=29 kg/s.

8.9. GEOTHERMAL HEAT ENGINES

Since interior regions of the earth have temperatures higher than that at the surface, an outward flux of heat is observed. The earth's interior is a vast thermal reservoir which can be used as a source of energy if favorable geological conditions exist. There are many areas have high heat flow rate. Also, there are many geological formations result in thermal reservoirs located within short distance of the earth's surface. By drilling into these high temperature reservoirs, useful quantities of geothermal energy are obtained.

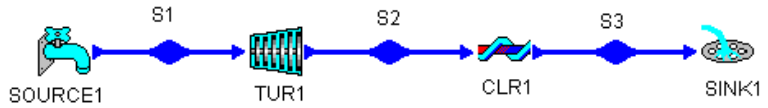

Figure 8.9.1. Dry-steam geothermal power plant

In a few regions, porous rock is overlain by a low permeability stratum and above that an aquifer which allows water to trickle into the hot porous rock at a rate such that a steady flow of dry steam is generated. Dry-steam is the most desirable form of geothermal energy. For these dry steam wells, the obvious course is to use the dry steam directly in the turbine after filtering it to remove mineral particulate. The dry steam can be expanded in a turbine and exhausted directly to the atmosphere. While this is the simplest and least costly type of geothermal power installation, its efficiency in covert geothermal energy to electrical energy is low. Leaving the turbine would be a mixture of vapor and liquid, the pressure of which must be above the atmospheric pressure. The exhaust geothermal fluid temperature must therefore be above 100EC. A considerable improvement on the efficient of the geothermal power plant can be achieved by reducing the turbine exhaust temperature to 50EC. A

condenser with an internal pressure less than atmospheric pressure is required. Figure 8.9.1 shows the basic dry steam geothermal power plant for such an arrangement.

Example 8.9.1.

At a geothermal energy source, dry steam at 700 kPa and 170EC is available at a mass flow rate of 100 kg/s. A barometric condenser at 10 kPa is used to decrease the turbine exhaust temperature. Find (A) the power produced by the geothermal power plant as shown in Figure 2.9.1. (B) What is the power produced without the barometric condenser?

To solve this problem with CyclePad, we take the following steps:

1. Build as shown in Figure 8.9.1
2. Analysis
   (A) Assume a process each for the two devices: (a) turbine as adiabatic with 100% efficiency, and (b) condenser as isobaric process.
   (B) Input the given information: (a) working fluid of cycle is water, (b) the inlet temperature and pressure of the turbine are 170EC and 700 kPa, (c) the inlet pressure of the condenser is 10 kPa, and (d) the mass flow rate is 100 kg/s.
3. Display result

The answers are: (A) With condenser, power=64220 kW as shown in Figure E8.9.1a, and (B) Without condenser, changing the inlet pressure of the condenser to 100 kPa gives: power=33270 kW as shown in Figure E8.9.1b.

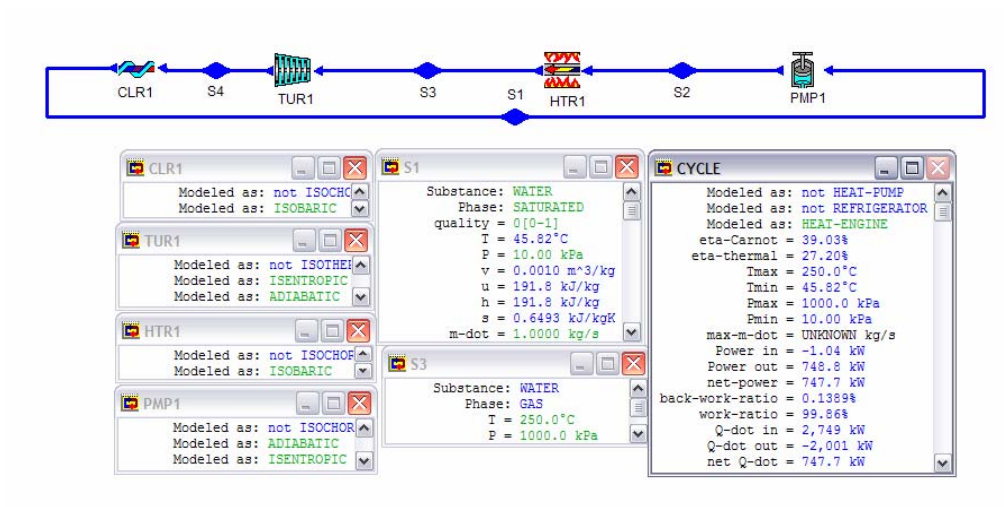

Figure E8.9.1a. Dry-steam geothermal power plant with condenser

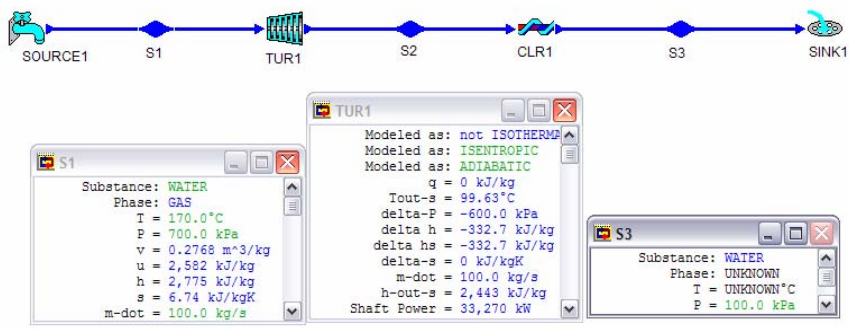

Figure E8.9.1b. Dry-steam geothermal power plant without condenser

More commonly than it puts out dry steam, a geothermal well puts out a mixture of steam and water above 130EC, or just hot water. A separator is needed in a hot water-steam mixture geothermal power plant to separate the flashing steam from the hot-water as shown in Figure 8.9.2. An additional throttling valve is required to generate saturated steam in a hot water geothermal power plant.

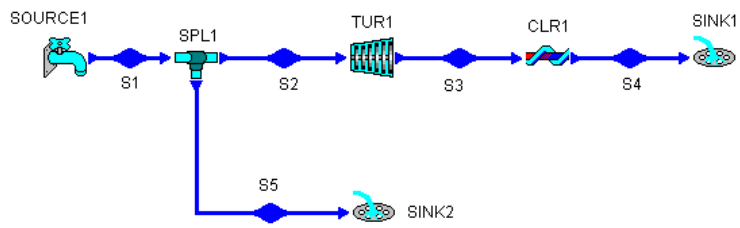

Figure 8.9.2. Hot water-steam mixture geothermal power plant

Example 8.9.2.

At a geothermal energy source, a mixture of 80% steam and 20% water at 140EC is available at a mass flow rate of 1 kg/s. A barometric condenser at 10 kPa is used to decrease the turbine exhaust temperature. Find the power produced by the geothermal power plant.

To solve this problem with CyclePad, we take the following steps:

1. Build as shown in Figure 8.9.2.
2. Analysis
   (A) Assume a process each for the three devices: (a) turbine as adiabatic with 100% efficiency, (b) splitters as not iso-parametric devices, and (c) condenser as isobaric process.
   (B) Input the given information: (a) working fluid of cycle is water, (b) the inlet mass flow rate, quality and temperature of the separator (splitter) are 1 kg/s, 0.8

and 140EC, (c) the inlet quality of the turbine is 1, (d) the inlet quality of the sink1 is 0, and (e) the inlet pressure of the condenser is 10 kPa.

3. Display result

The answer is Power=430.8 kW as shown in Figure E8.9.2.

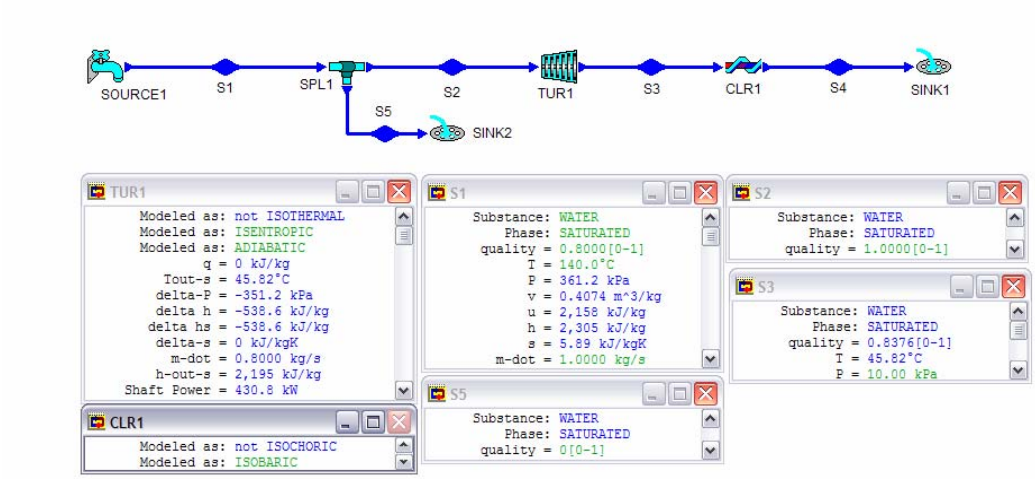

Figure E8.9.2. Hot water-steam mixture geothermal power plant

Example 8.9.3.

A proposal is made to use a geothermal supply of hot water at 1500 kPa and 180EC to operate a steam turbine. The high pressure water is throttled into a flash evaporator chamber, which forms liquid and vapor at a lower pressure of 400 kPa. The liquid is discarded while the saturated vapor feeds the turbine and exits at 10 kPa. Cooling water is available at 15EC. Find the turbine power per unit geothermal hot water mass flow rate. The turbine efficiency is 88%. Find the power produced by the geothermal power plant. Find the optimized flash pressure that will give the most turbine power per unit geothermal hot water mass flow rate.

To solve this problem with CyclePad, we take the following steps:

1. Build the hot water geothermal power plant as shown in Figure 8.9.2.
2. Analysis
   (A) Assume a process each for the three devices: (a) turbine as adiabatic with 88% efficiency, (b) splitters as not iso-parametric devices, and (c) condenser as isobaric process. Notice that throttling devices in CyclePad are automatically constant enthalpy processes.
   (B) Input the given information: (a) working fluid of cycle is water, (b) the inlet mass flow rate, pressure and temperature of the separator (splitter) are 1 kg/s, 1500 kPa and 180EC, (c) the inlet quality and pressure of the turbine are 1 and 400 kPa, (d) the inlet quality of the sink1 is 0, and (e) the inlet pressure of the condenser is 10 kPa.

3. Display result

The answer is Power=36.25 kW as shown in Figure E8.9.3a.

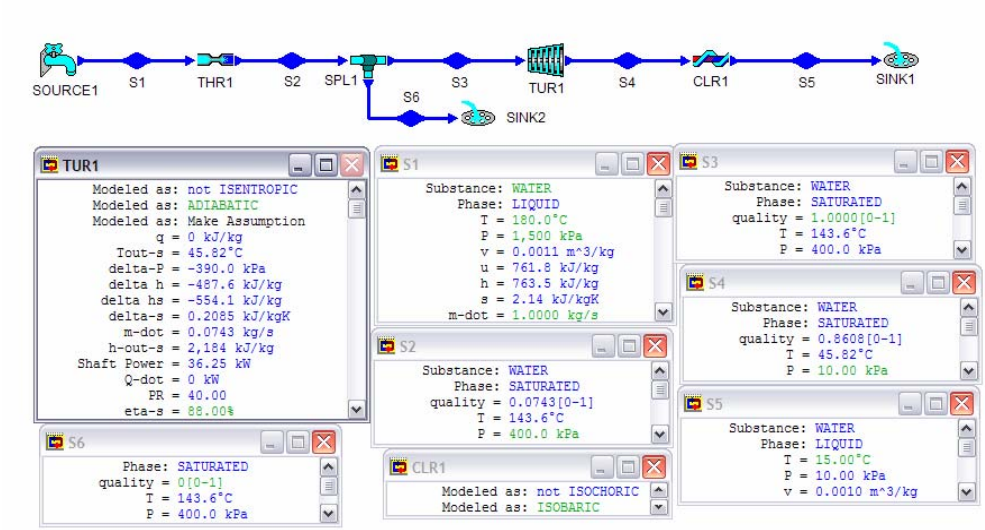

Figure E8.9.3a. Geothermal hot water power plant

To find the optimized flash pressure that will give the most turbine power per unit geothermal hot water mass flow rate, we use the sensitivity analysis. A plot of power versus turbine inlet pressure is made as shown in Figure E8.9.3b. The maximum power is found about 42 kW at a pressure of about 140 kPa.

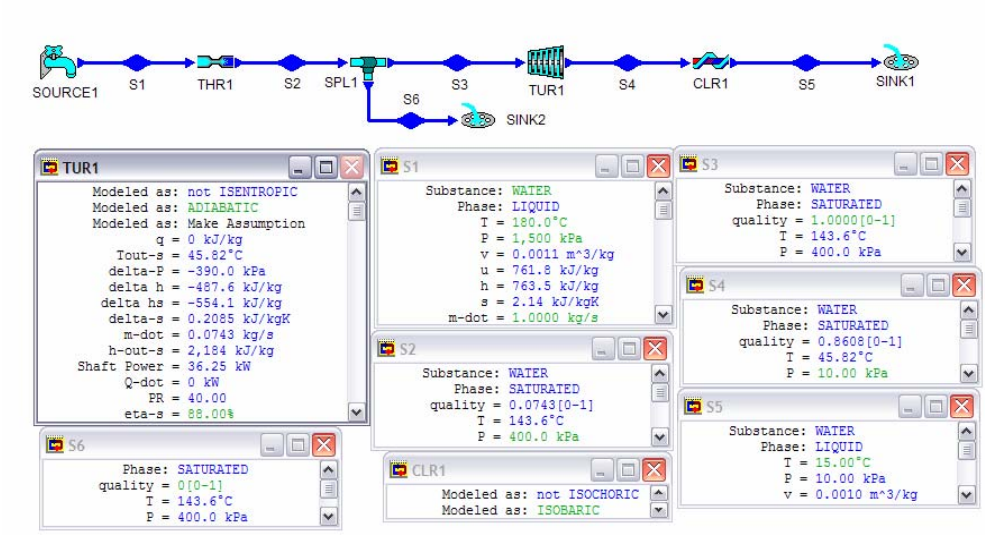

Figure E8.9.3b. Optimization of Geothermal hot water power plant

Example 8.9.4.

A proposal is made to use a geothermal supply of hot water at 1500 kPa and 180EC to operate a two flash evaporators and two geothermal steam turbines system as shown in Figure Example 2.9.4a.. The high pressure water is throttled into a flash evaporator chamber, which forms liquid and vapor at a lower pressure of 400 kPa. The saturated vapor at 400 kPa feeds the high pressure turbine and exits at 10 kPa. The saturated liquid at 400 kPa is then throttled into a flash evaporator chamber, which forms liquid and vapor at a lower pressure of 100 kPa. The liquid at 100 kPa is discarded while the saturated vapor at 100 kPa feeds the low pressure turbine and exits at 10 kPa. Cooling water is available at 15EC. The turbines have efficiency of 80%. Find the total turbine power per unit geothermal hot water mass flow rate.

Consider there is an optional choice for flash pressure. Find the optimized flash pressure that will give the most total turbine power per unit geothermal hot water mass flow rate.

To solve this problem with CyclePad, we take the following steps:

1. Build as shown in Figure E8.9.4a.

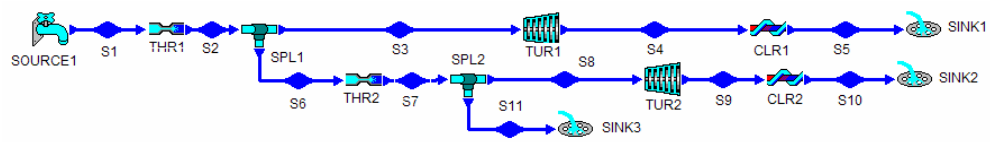

Figure E8.9.4a. Two flash evaporators and two geothermal steam turbines system

2. Analysis
   (A) Assume a process each for the eight devices: (a) turbines as adiabatic with 80% efficiency, (b) spliters as not iso-parametric devices, and (c) condensers as isobaric processes. Notice that throttling devices are automatically constant enthalpy processes.
   (B) Input the given information: (a) working fluid of cycle is water, (b) the inlet (state 1) mass flow rate, pressure and temperature of the high-pressure throttling valve separator (splitter 1) are 1 kg/s, 1500 kPa and 180EC, (c) the inlet (state 2) pressure of the high-pressure splitter 1 is 350 kPa, (d) the inlet (state 3) quality and pressure of the high-pressure turbine are 1 and 350 kPa, (e) the inlet (state 6) quality of the low-pressure throttling valve 2 is 0, (f) the inlet (state 7) pressure of the low-pressure splitter 2 is 100 kPa, (g) the inlet pressures of the condensers are 10 kPa, and (h) the exit temperatures of the condensers are 15EC as shown in Figure E8.9.4b.

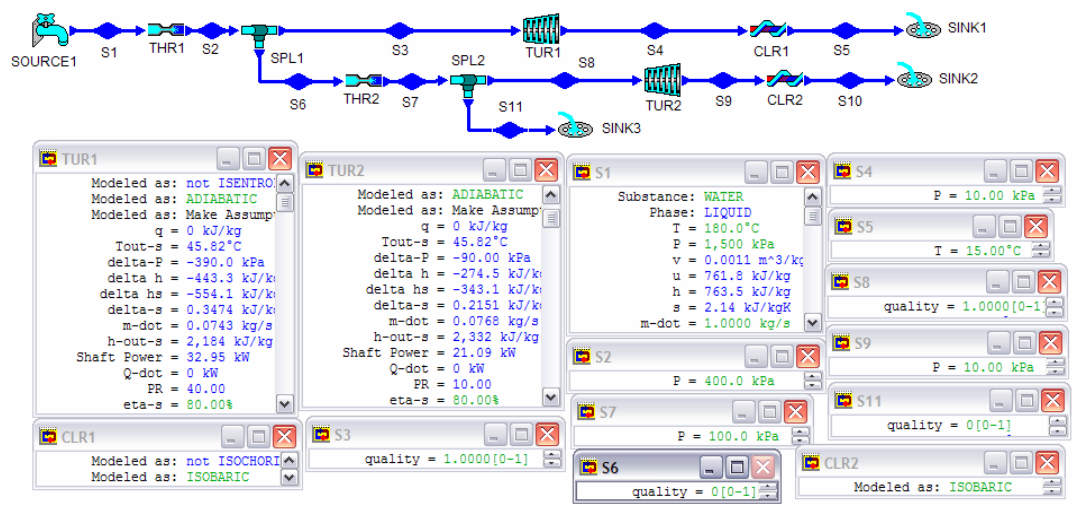

Figure E8.9.4b. Input information

3. Display result

The answers are power of turbine 1=32.95 kW, power of turbine 2=21.09 kW, and total turbine power=32.95+21.09=54.04 kW as shown in Figure E8.9.4c.

To find the optimized flash pressure that will give the most turbine power per unit geothermal hot water mass flow rate, we use the sensitivity analysis. A plot of total turbine power versus high-pressure turbine 1 inlet pressure (p_2) is made as shown in Figure E8.9.4d. The maximum total turbine power is found about 54.3 kW at a pressure of 400 kPa.

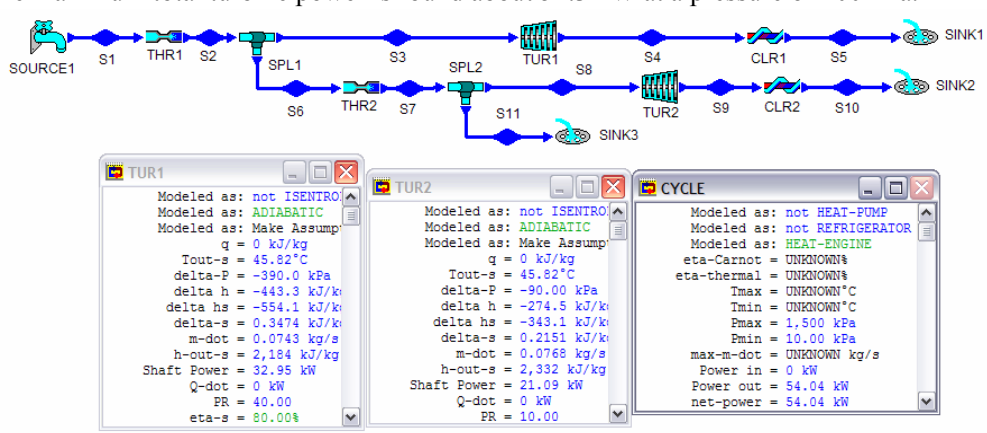

Figure E8.9.4c. Output information

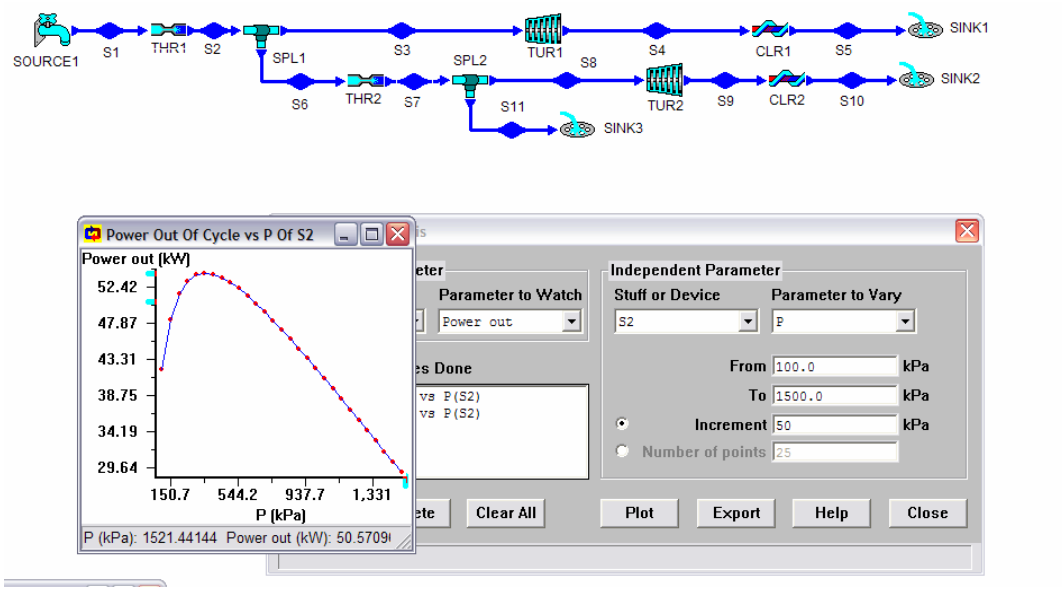

Figure E8.9.4d. Sensitivity diagram of total turbine power versus pressure

Electrical power can be produced by geothermal fields in which either hot water and steam below 130EC by using a secondary closed Rankine cycle as shown in Figure 8.9.3.

Dry geothermal fields (high temperature rocks) in which no water is present are another potential source of geothermal energy. Water will need to be injected into the field. After drilling, fracturing of the high temperature rocks will be required to improve heat transfer areas with water. A secondary closed Rankine cycle as shown in Figure 8.9.3 will be required for producing power.

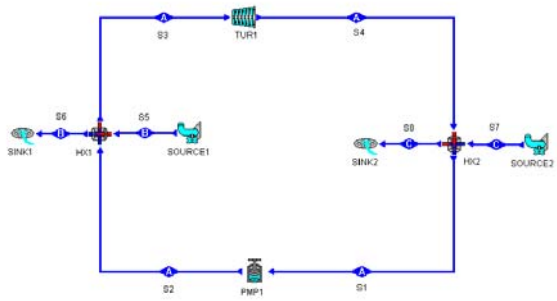

Figure 8.9.3. A closed-cycle low-temperature dry geothermal Rankine cycle

Example 8.9.5.

At a dry geothermal energy source, hot rock is available. Water is injected into the field. Geothermal energy is transferred from the hot rock to a proposed Rankine heat engine by a heat exchanger. The information of the proposed geothermal steam-Rakine cycle are: fluid

mass flow rate, quality and pressure at the inlet of the pump are 1 kg/s, 0 and 8 kPa; fluid quality and pressure at the inlet of the turbine are 1 and 140 kPa; hot water temperature at the inlet and exit of the heat exchanger are 120EC and 70EC, cololing water temperature at the inlet and exit of the heat exchanger are 15EC and 20EC. Find the power produced by the geothermal power plant.

To solve this problem with CyclePad, we take the following steps:

1. Build as shown in Figure 8.9.3.
2. Analysis
   (A) Assume a process each for the four devices: (a) turbine as adiabatic with 100% efficiency, (b) pump as adiabatic with 100% efficiency, (c) condenser as isobaric process, and (d) both hot- and cold-side of the heat exchanger are isobaric.
   (B) Input the given information: (a) working fluid of cycle is water, (b) the inlet mass flow rate, quality and pressure of the pump are 1 kg/s, 0 and 8 kPa, (c) the inlet quality and pressure at the inlet of the turbine are 1 and 140 kPa, (d) the inlet and exit of the heat exchanger are 120EC and 70EC , and (e) the inlet pressure of the hot water to the heat exchanger is 100 kPa.
3. Display result

The answer is power=422.5 kW as shown in Figure E8.9.5.

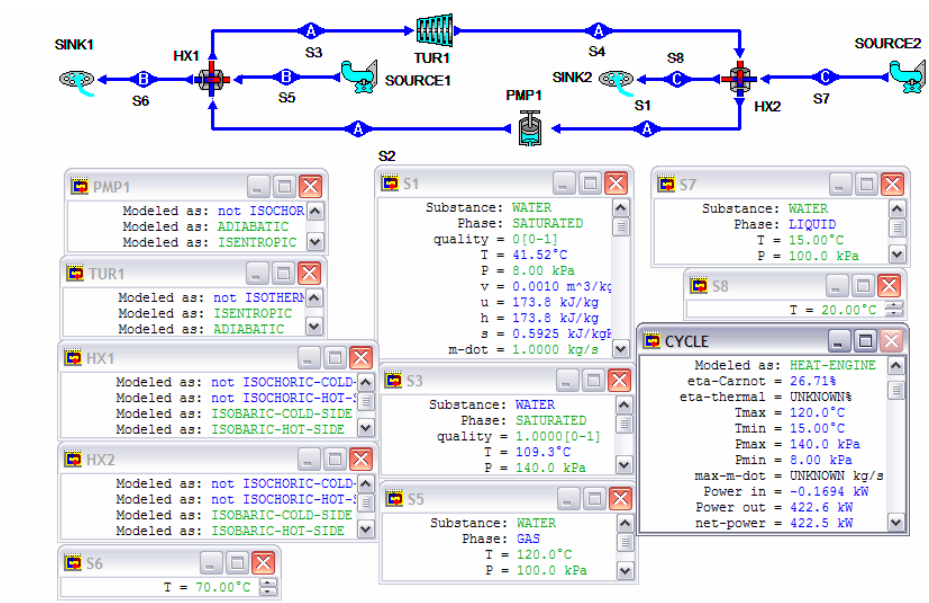

Figure E8.9.5. A closed-cycle low-temperature dry geothermal Rankine cycle

Homework 8.9. Geothermal Heat Engines

1. A proposal is made to use a geothermal supply of hot water at 1000 kPa and 170EC to operate a steam turbine as shown in Figure 8.9.3. The high pressure water is throttled into a flash evaporator chamber, which forms liquid and vapor at a lower pressure of 400 kPa. The liquid is discarded while the saturated vapor feeds the turbine and exits at 10 kPa. Cooling water is available at 15EC. The turbine has an isentropic efficiency of 88%. Find the turbine power per unit geothermal hot water mass flow rate. Find the optimized flash pressure that will give the most turbine power per unit geothermal hot water mass flow rate.
   ANSWER: Turbine power=26.51 kW; Maximum turbine power=40.8 kW at throttling pressure=106 kPa.
2. A proposal is made to use a geothermal supply of hot water at 800 kPa and 170EC to operate a steam turbine as shown in Figure 8.9.3. The high pressure water is throttled into a flash evaporator chamber, which forms liquid and vapor at a lower pressure of 300 kPa. The liquid is discarded while the saturated vapor feeds the turbine and exits at 10 kPa. Cooling water is available at 15EC. The turbine has an isentropic efficiency of 85%. Find the turbine power per unit geothermal hot water mass flow rate. Find the optimized flash pressure that will give the most turbine power per unit geothermal hot water mass flow rate.
   ANSWER: Turbine power=31.62 kW; Maximum turbine power=39.3 kW at throttling pressure=107 kPa.
3. A proposal is made to use a geothermal supply of hot water at 1000 kPa and 150EC to operate a two flash evaporators and two geothermal steam turbines system. The high pressure water is throttled into a flash evaporator chamber, which forms liquid and vapor at a lower pressure of 400 kPa The saturated vapor at 400 kPa feeds the high pressure turbine and exits at 10 kPa. The high pressure turbine has an isentropic efficiency of 88%. The saturated liquid at 400 kPa is then throttled into a flash evaporator chamber, which forms liquid and vapor at a lower pressure of 100 kPa. The liquid at 100 kPa is discarded while the saturated vapor at 100 kPa feeds the low pressure turbine and exits at 10 kPa. The low pressure turbine has an isentropic efficiency of 87%. Cooling water is available at 15EC. Find the turbine power per unit geothermal hot water mass flow rate. Consider there is an optional choice for flash pressure. Find the optimized flash pressure that will give the most total turbine power per unit geothermal hot water mass flow rate.
   ANSWER: High pressure turbine power=6.34 kW, Low pressure turbine power=24.45 kW; Maximum turbine power=33.5 kW at throttling pressure=230 kPa.
4. A proposal is made to use a geothermal supply of hot water at 1200 kPa and 170EC to operate a two flash evaporators and two geothermal steam turbines system. The high pressure water is throttled into a flash evaporator chamber, which forms liquid and vapor at a lower pressure of 400 kPa The saturated vapor at 400 kPa feeds the high pressure turbine and exits at 10 kPa. The high pressure turbine has an isentropic efficiency of 85%. The saturated liquid at 400 kPa is then throttled into a flash evaporator chamber, which forms liquid and vapor at a lower pressure of 100 kPa. The liquid at 100 kPa is discarded while the saturated vapor at 100 kPa feeds the low

pressure turbine and exits at 10 kPa. The low pressure turbine has an isentropic efficiency of 85%. Cooling water is available at 15EC. Find the turbine power per unit geothermal hot water mass flow rate. Consider there is an optional choice for flash pressure. Find the optimized flash pressure that will give the most total turbine power per unit geothermal hot water mass flow rate.

ANSWER: High pressure turbine power=25.3 kW, Low pressure turbine power=22.9 kW; Maximum turbine power=48.8 kW at throttling pressure=295 kPa.

5. A proposal is made to use a geothermal supply of hot water at 1200 kPa and 180EC to operate a two flash evaporators and two geothermal steam turbines system. The high pressure water is throttled into a flash evaporator chamber, which forms liquid and vapor at a lower pressure of 400 kPa The saturated vapor at 600 kPa feeds the high pressure turbine and exits at 10 kPa. The high pressure turbine has an isentropic efficiency of 85%. The saturated liquid at 600 kPa is then throttled into a flash evaporator chamber, which forms liquid and vapor at a lower pressure of 100 kPa. The liquid at 100 kPa is discarded while the saturated vapor at 100 kPa feeds the low pressure turbine and exits at 10 kPa. The low pressure turbine has an isentropic efficiency of 85%. Cooling water is available at 15EC. Find the turbine power per unit geothermal hot water mass flow rate.
6. Consider there is an optional choice for flash pressure. Find the optimized flash pressure that will give the most total turbine power per unit geothermal hot water mass flow rate.

   ANSWER: High pressure turbine power=23.24 kW, Low pressure turbine power=31.25 kW; Maximum turbine power=57.5 kW at throttling pressure=340 kPa.
7. A proposal is made to use a geothermal supply of hot water at 1200 kPa and 170EC to operate a two flash evaporators and two geothermal steam turbines system. The high pressure water is throttled into a flash evaporator chamber, which forms liquid and vapor at a lower pressure of 400 kPa The saturated vapor at 400 kPa feeds the high pressure turbine and exits at 10 kPa. The high pressure turbine has an isentropic efficiency of 88%. The saturated liquid at 400 kPa is then throttled into a flash evaporator chamber, which forms liquid and vapor at a lower pressure of 100 kPa. The liquid at 100 kPa is discarded while the saturated vapor at 100 kPa feeds the low pressure turbine and exits at 10 kPa. The low pressure turbine has an isentropic efficiency of 87%. Cooling water is available at 15EC. Find the turbine power per unit geothermal hot water mass flow rate.
8. Consider there is an optional choice for flash pressure. Find the optimized flash pressure that will give the most total turbine power per unit geothermal hot water mass flow rate.

   ANSWER: High pressure turbine power=26.19 kW, Low pressure turbine power=23.44 kW; Maximum turbine power=49.9 kW at throttling pressure=300 kPa.
9. A geothermal supply of hot water at 800 kPa, 150EC is fed to the throttling valve of a geothermal power plant. A stream of saturated vapor at 300 kPa is drawn from the separator and fed to the turbine. The turbine has an isentropic efficiency of 85% and an exit pressure of 10 kPa. Cooling water is available at 15EC. Find the turbine power per unit geothermal hot water mass flow rate.

ANSWER: Turbine power=14.21 kW; Maximum turbine power=27.9 kW at throttling pressure=80 kPa.

10. A geothermal supply of hot water at 800 kPa, 160EC is fed to the throttling valve of a geothermal power plant. A stream of saturated vapor at 300 kPa is drawn from the separator and fed to the turbine. The turbine has an isentropic efficiency of 88% and an exit pressure of 10 kPa. Cooling water is available at 15EC. Find the turbine power per unit geothermal hot water mass flow rate.
    ANSWER: Turbine power=23.96 kW; Maximum turbine power=27.8 kW at throttling pressure=79 kPa.
11. A proposal is made to use a geothermal supply of hot water at 1200 kPa and 180EC to operate a two flash evaporators and two geothermal steam turbines system. The high pressure water is throttled into a flash evaporator chamber, which forms liquid and vapor at a lower pressure of 400 kPa The saturated vapor at 400 kPa feeds the high pressure turbine and exits at 10 kPa. The saturated liquid at 400 kPa is then throttled into a flash evaporator chamber, which forms liquid and vapor at a lower pressure of 100 kPa. The liquid at 100 kPa is discarded while the saturated vapor at 100 kPa feeds the low pressure turbine and exits at 10 kPa. Cooling water is available at 15EC. The turbines have efficiency of 80%. Find the turbine power per unit geothermal hot water mass flow rate.
    ANSWER: Total turbine power=54.49 kW.
12. A proposal is made to use a geothermal supply of hot water at 1200 kPa and 170EC to operate a two flash evaporators and two geothermal steam turbines system. The high pressure water is throttled into a flash evaporator chamber, which forms liquid and vapor at a lower pressure of 400 kPa The saturated vapor at 400 kPa feeds the high pressure turbine and exits at 10 kPa. The saturated liquid at 400 kPa is then throttled into a flash evaporator chamber, which forms liquid and vapor at a lower pressure of 100 kPa. The liquid at 100 kPa is discarded while the saturated vapor at 100 kPa feeds the low pressure turbine and exits at 10 kPa. Cooling water is available at 15EC. The turbines have efficiency of 80%. Find the turbine power per unit geothermal hot water mass flow rate.
    ANSWER: Total turbine power=44.18 kW.

8.10. OCEAN THERMAL ENERGY CONVERSION

Since the oceans comprise over 70% of the earth's surface area, the absorbed solar energy that is stored as latent heat of the oceans represents a very large potential source of energy. As a result of variation in the density of ocean water with temperature, the ocean water temperature is not uniform with depth. Warm surface ocean water with low density tends to stay on the surface and cold water with high density within a few degree of 4EC tends to settle to the depths of the ocean. In the tropics, ocean surface temperatures in excess of 25EC occur. The combination of the warmed surface water and cold deep water provides two different temperature thermal reservoirs needed to operate a heat engine called OTEC (ocean thermal energy conversion). Since the temperature difference of the OTEC between the heat source and the heat sink is small, the OTEC power plant cycle efficiency is small. It

means that enormous quantities of ocean water must be handled and the heat exchangers and turbine must be very large.

There are two principal approaches to build OTEC power plants. The first approach called open OTEC cycle involves a flash boiler to obtain steam directly from the warm surface ocean water. The open OTEC cycle requires a very large turbine. The second approach called closed OTEC cycle involves heat exchangers and a secondary thermodynamic working fluid such as ammonia or freon to reduce the size of the plant.

Ocean water is the working fluid of the open OTEC cycle as shown in Figure 8.10.1. For conditions typical of an open OTEC plant, the vapor pressure of the boiler at 26EC is 3.37 kPa and the vapor pressure of the condenser at 5EC is 0.874 kPa. Boiling of the warm water occurs at a pressure of only 3% of atmospheric pressure. The steam is expanded in a low pressure, low temperature, high volume turbine before being condensed by the cold water. An advantage of this cycle is that heat exchangers with their attendant temperature differentials are unnecessary. The disadvantage is the very small pressure drop and the large specific volumes that must be utilized by the turbine.

The closed OTEC cycle as shown in Figure 8.10.2 uses a secondary thermodynamic working fluid such as ammonia or freon to reduce the size of the plant. For a boiler temperature of 25EC, the vapor pressure of ammonia is nearly 10 times the atmospheric pressure and the specific volume is comparable to that of a conventional steam power plant. While the size of a turbine is smaller than that of a comparable low pressure steam turbine, large heat exchangers are required.

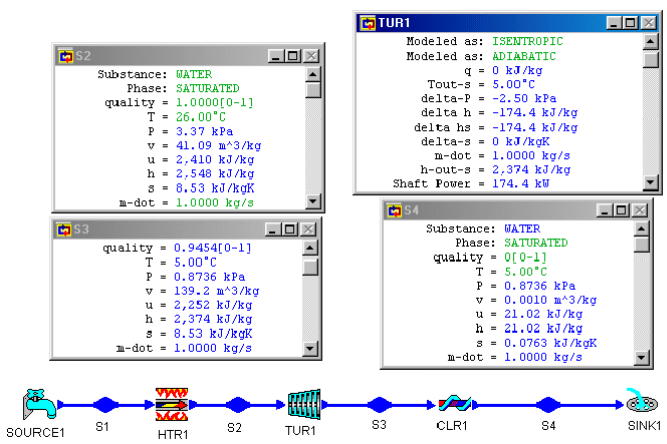

Figure 8.10.1. Open OTEC cycle

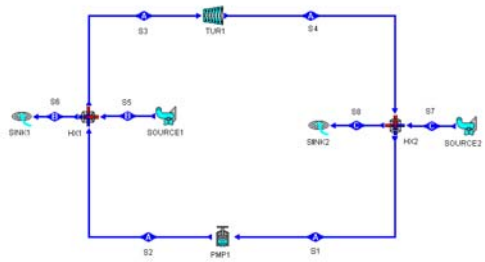

Figure 8.10.2. Closed OTEC cycle

Example 8.10.1.

A typical closed-cycle OTEC Rankine cycle using ammonia is suggested as illustrated in Figure 8.10.2 with the following information:]

Condenser temperature	12EC
Boiler temperature	24EC
Mass flow rate of ammonia	1 kg/s
Surface ocean warm water entering heat exchanger	28EC
Surface ocean warm water leaving heat exchanger	26EC
Deep ocean cooling water entering heat exchanger	5EC
Deep ocean cooling water leaving heat exchanger	9EC
Turbine efficiency	100%
Pump efficiency	100%

(A) Determine the pump power, turbine power, net power output, rate of heat added in the heat exchanger by surface ocean warm water, rate of heat removed in the heat exchanger by deep ocean cooling water, cycle efficiency, specific volume of ammonia entering the turbine, boiler pressure, condenser pressure, mass flow rate of surface ocean warm water, and mass flow rate of deep ocean cooling water.

(B) Change the working fluid to R-134a (tetrafluoroethane). Determine the pump power, turbine power, net power output, rate of heat added in the heat exchanger by surface ocean warm water, rate of heat removed in the heat exchanger by deep ocean cooling water, cycle efficiency, specific volume of ammonia entering the turbine, boiler pressure, condenser pressure, mass flow rate of surface ocean warm water, and mass flow rate of deep ocean cooling water.

To solve this problem with CyclePad, we take the following steps:

1. Build as shown in Figure 8.10.2
2. Analysis
   (A) Assume a process each for the four devices: (a) pump as adiabatic with 100% efficiency, (b) turbine as adiabatic with 100% efficiency, (c) heat exchanger 1

(boiler) as isobaric on both cold-side and hot-side, and (d) heat exchanger 2 (condenser) as isobaric on both cold-side and hot-side.

(B) Input the given information: (a) working fluid of cycle A is ammonia, working fluid of cycle B is water, and working fluid of cycle C is water, (b) the inlet temperature and quality of the pump are 12EC and 0, (c) the inlet temperature and quality of the turbine are 24EC and 1, and (d) the mass flow rate is 1 kg/s.

3. Display result

The answers are: (A) $Wdot_{pump}$=-6.58 kW, $Wdot_{turbine}$=48.91 kW, $Wdot_{net}$=42.33 kW, $Qdot_{boiler}$=1220 kW, $Qdot_{condenser}$=-1178 kW, 0=3.47%, v=0.1321 m^3/kg, p_{boiler}=972.4 kPa, $p_{condenser}$=658.5 kPa, $mdot_{warm\ water}$=145.8 kg/s, and $mdot_{cold\ water}$=70.23 kg/s.

4. (A) Retract the working fluid: working fluid of cycle A is R-134a, and (B) Display result as shown in Figure Example 8.10.1a and 8.10.1b.

The answers are:

(B) $Wdot_{pump}$=-1.38 kW, $Wdot_{turbine}$=7.74 kW, $Wdot_{net}$=6.36 kW, $Qdot_{boiler}$=194.2 kW, $Qdot_{condenser}$=-187.9 kW, 0=3.27%, v=0.0320 m^3/kg, p_{boiler}=445.3 kPa, $p_{condenser}$=647.6 kPa, $mdot_{warm\ water}$=23.21 kg/s, and $mdot_{cold\ water}$=11.21 kg/s.

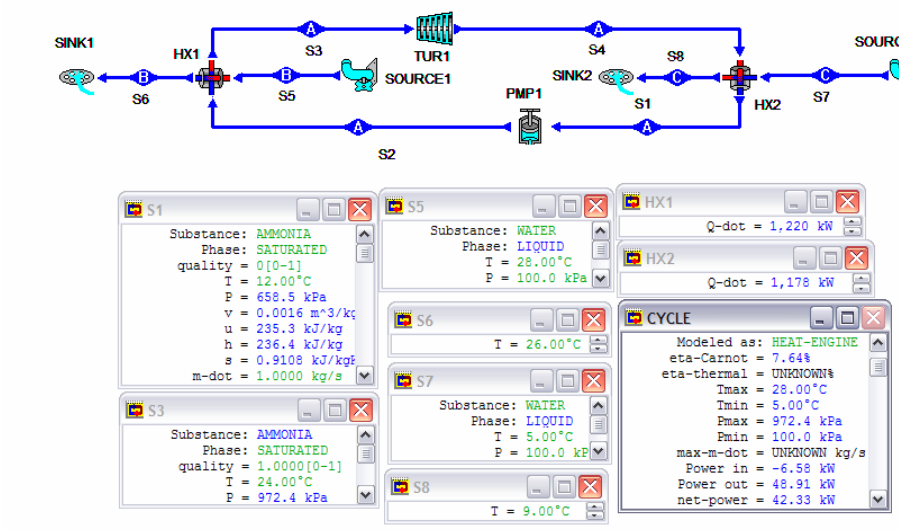

Figure E8.10.1a. OTEC Rankine cycle

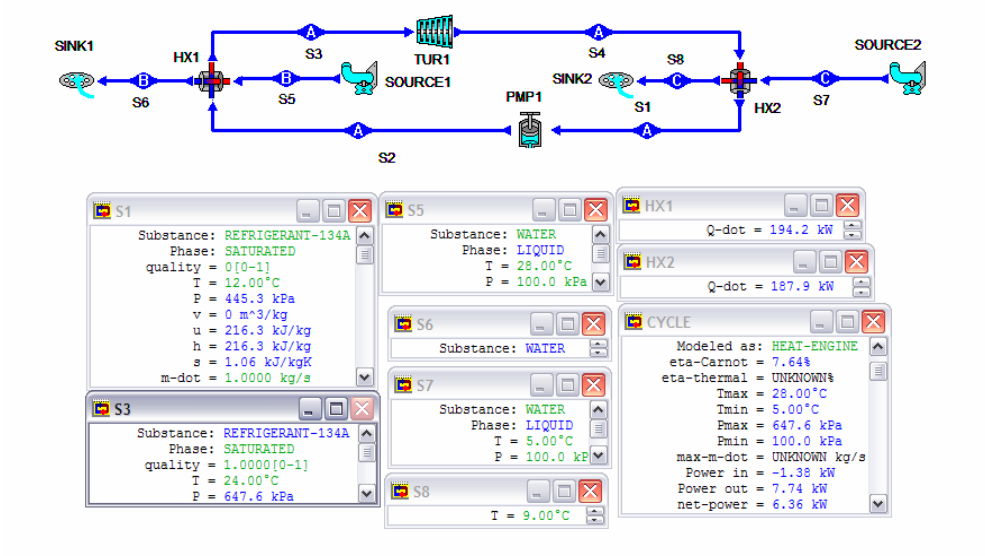

Figure E8.10.1b. OTEC Rankine cycle

Homework 8.10 Ocean Thermal Energy Conversion

1. A typical closed-cycle OTEC Rankine cycle using ammonia is suggested as illustrated in Figure 8.7.3 with the following information:

Condenser temperature	10EC
Boiler temperature	22EC
Mass flow rate of ammonia	1 kg/s
Surface ocean warm water entering heat exchanger	28EC
Surface ocean warm water leaving heat exchanger	22EC
Deep ocean cooling water entering heat exchanger	4EC
Deep ocean cooling water leaving heat exchanger	10EC
Turbine efficiency	100%
Pump efficiency	100%

Determine the pump power, turbine power, net power output, rate of heat added in the heat exchanger by surface ocean warm water, rate of heat removed in the heat exchanger by deep ocean cooling water, cycle efficiency, boiler pressure, condenser

pressure, mass flow rate of surface ocean warm water, and mass flow rate of deep ocean cooling water.

ANSWERS: $Wdot_{pump}$=-6.36 kW, $Wdot_{turbine}$=49.55 kW, $Wdot_{net}$=43.18 kW, $Qdot_{boiler}$=1228 kW, $Qdot_{condenser}$=-1185 kW, 0=3.52%, p_{boiler}=913.4 kPa, $p_{condenser}$=614.9 kPa, $mdot_{warm\ water}$=47.08 kg/s, and $mdot_{cold\ water}$=36.71 kg/s.

2. A typical closed-cycle OTEC Rankine cycle using R-12 (dichlorodifluoromethane) is suggested as illustrated in Figure 8.7.3 with the following information:

Condenser temperature	10EC
Boiler temperature	22EC
Mass flow rate of ammonia	1 kg/s
Surface ocean warm water entering heat exchanger	28EC
Surface ocean warm water leaving heat exchanger	22EC
Deep ocean cooling water entering heat exchanger	4EC
Deep ocean cooling water leaving heat exchanger	10EC
Turbine efficiency	100%
Pump efficiency	100%

Determine the pump power, turbine power, net power output, rate of heat added in the heat exchanger by surface ocean warm water, rate of heat removed in the heat exchanger by deep ocean cooling water, cycle efficiency, boiler pressure, condenser pressure, mass flow rate of surface ocean warm water, and mass flow rate of deep ocean cooling water.

ANSWERS: $Wdot_{pump}$=-1.06 kW, $Wdot_{turbine}$=6.06 kW, $Wdot_{net}$=5.00 kW, $Qdot_{boiler}$=150.1 kW, $Qdot_{condenser}$=-145.1 kW, 0=3.33%, p_{boiler}=600.7 kPa, $p_{condenser}$=423.0 kPa, $mdot_{warm\ water}$=4.49 kg/s, and $mdot_{cold\ water}$=5.77 kg/s.

3. A typical closed-cycle OTEC Rankine cycle using R-22 (chlorodifluoromethane) is suggested as illustrated in Figure 8.7.3 with the following information:

Condenser temperature	10EC
Boiler temperature	22EC
Mass flow rate of ammonia	1 kg/s
Surface ocean warm water entering heat exchanger	28EC
Surface ocean warm water leaving heat exchanger	22EC
Deep ocean cooling water entering heat exchanger	4EC
Deep ocean cooling water leaving heat exchanger	10EC
Turbine efficiency	100%
Pump efficiency	100%

Determine the pump power, turbine power, net power output, rate of heat added in the heat exchanger by surface ocean warm water, rate of heat removed in the heat exchanger by deep ocean cooling water, cycle efficiency, boiler pressure, condenser pressure, mass flow rate of surface ocean warm water, and mass flow rate of deep ocean cooling water.

ANSWERS: $Wdot_{pump}$=-2.23 kW, $Wdot_{turbine}$=8.09 kW, $Wdot_{net}$=5.86 kW, $Qdot_{boiler}$=198.4 kW, $Qdot_{condenser}$=-192.5 kW, 0=2.95%, p_{boiler}=963.5 kPa, $p_{condenser}$=680.7 kPa, $mdot_{warm\ water}$=5.93 kg/s, and $mdot_{cold\ water}$=7.65 kg/s.

8.11. SOLAR POND HEAT ENGINES

Solar pond heat engine is a small scale, inverse OTEC system. In this system, a shallow (1 to 2 m deep) pond saturated with a salt is used as the primary solar collector. As the surface waters of the pond are heated by the solar radiation, the solubility of this warm water increases and the solution becomes heavier as it absorbs more salt. This causes the hot water to sink to the bottom of the pond. Consequently, the bottom water of the pond becomes very hot (65 to 82EC) while the surface water remains at temperature below 32EC.

The hot water from the bottom of the pond is pumped through a boiler, where it boils a working fluid in a Rankine power cycle as shown in Figure 8.11.1. The cooler water from the surface of the pond is used to cool the turbine exhaust vapor in the condenser. This is the same concept that is employed in the OTEC system, except that in the OTEC system the surface waters are warmer than that of the deep ocean water.

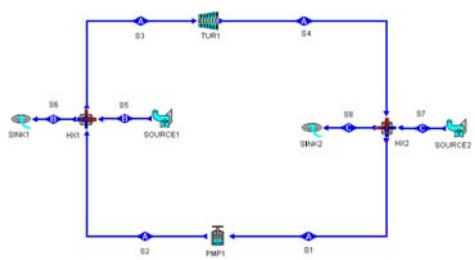

Figure 8.11.1. Solar pond heat engine.

Example 8.11.1.

A proposal is made to use a solar pond supply of bottom pond hot water at 100 kPa and 80EC to operate a steam turbine. The 100 kPa-pressure bottom pond water is throttled into a flash evaporator chamber, which forms liquid and vapor at a lower pressure of 20 kPa. The liquid is discarded while the saturated vapor feeds the turbine and exits at 10 kPa. Cooling water is available at 15EC. Find the turbine power per unit geothermal hot water mass flow rate. The turbine efficiency is 80%. Find the power produced by the solar pond power plant.

To solve this problem with CyclePad, we take the following steps:

1. Build as shown in Figure E8.11.1.
2. Analysis
   (A) Assume a process each for the four devices: (a) turbine as adiabatic with 80% efficiency, (b) splitter as not iso-parametric devices, and (c) condenser as

isobaric process. Notice that throttling devices are automatically constant enthalpy processes.

(B) Input the given information: (a) working fluid of cycle is water, (b) the inlet mass flow rate, pressure and temperature of the separator (splitter) are 1 kg/s, 100 kPa and 80EC, (c) the inlet quality and pressure of the turbine are 1 and 20 kPa, (d) the inlet quality of the sink2 is 0, and (e) the exit pressure and temperature of the condenser are 10 kPa and 15EC.

3. Display result

The answer is power=2.89 kW as shown in Figure E8.11.1.

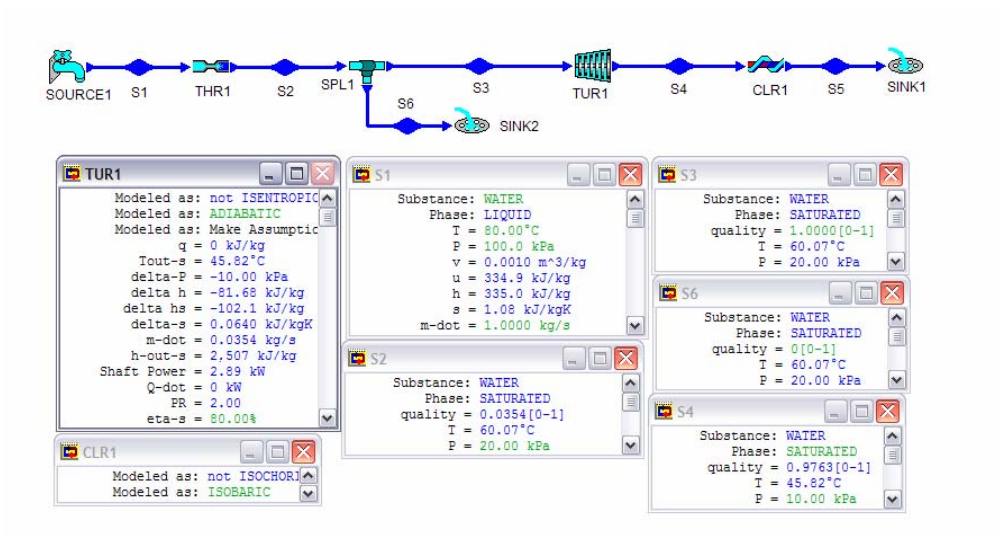

Figure E8.11.1. Solar pond heat engine.

Homework 8.11. Solar Pond Heat Engines

1. What is a solar pond heat engine?
2. A proposal is made to use a solar pond supply of bottom pond hot water at 100 kPa and 80EC to operate a steam turbine. The 100 kPa-pressure bottom pond water is throttled into a flash evaporator chamber, which forms liquid and vapor at a lower pressure of 20 kPa. The liquid is discarded while the saturated vapor feeds the turbine and exits at 10 kPa. Cooling water is available at 15EC. Find the turbine power per unit geothermal hot water mass flow rate. The turbine efficiency is 85%. Find the power produced by the solar pond power plant.
   ANSWER: Power produced by the solar pond power plant=3.07 kW.

8.12. WASTE HEAT ENGINES

Waste sources are variable in both type and availability depending on season, location and socioeconomic factors. Municipal solid residues generated by large metropolitan areas are large. Large amounts of waste materials are also generated from farming, animal manure, and crop production. The quantity and heating values of solid residue are large. These wastes are often flushed, buried or burned. Disposal practices of these wastes are wasteful of resources and create pollution of water and land. Conversion of waste material to useable thermal energy in large scale has been found to be cost effective and result in a net energy gain.

Biomass energy created by waste and residues left after food processing operations, and landfill gas mainly produced during anaerobic decomposition of organic waste material seem to offer the most promising source of waste heat engines. The material is already concentrated at the processing site and it creates a disposal pollution problem.

There are three major types of processes for direct combustion of waste biomass: water-wall incineration, supplementary fuel co-firing with coal or oil, and fluidized bed combustion.

In water-wall incineration, unprocessed municipal solid residues is loaded into the incinerator and burned on traveling grates. Low pressure and temperature (4 Mpa, 260EC) steam is produced.

Burning biomass as a supplementary fuel in combination with steam-electric power production is a proved and established technology.

Fluidized bed combustion uses air-classified municipal solid residues to provides heat for a conventional gas turbine to produce power. Several stages of cyclone separators are also used to remove particulate from the gas prior to its expansion through the turbines. An advantage of the process is reduction of noxious gas emission.

Example 8.12.1.

At a solid waste energy source, steam at 4000 kPa and 260EC is available at a mass flow rate of 1 kg/s. A barometric condenser at 10 kPa is used to decrease the turbine exhaust temperature. The turbine efficiency is 85%. Cooling water is available at 25EC. Find the power produced by the solid waste power plant.

To solve this problem with CyclePad, we take the following steps:

1. Build as shown in Figure 8.9.1
2. Analysis
   (A) Assume a process each for the two devices: (a) turbine as adiabatic with 85% efficiency, and (b) condenser as isobaric process.
   (B) Input the given information: (a) working fluid of cycle is water, (b) the inlet temperature and pressure of the turbine are 260EC and 4000 kPa, (c) the exit pressure and temperature of the condenser are 10 kPa and 25EC, and (d) the mass flow rate is 1 kg/s.
3. Display result

The answers are: power=759.8 kW as shown in Figure E8.12.1.

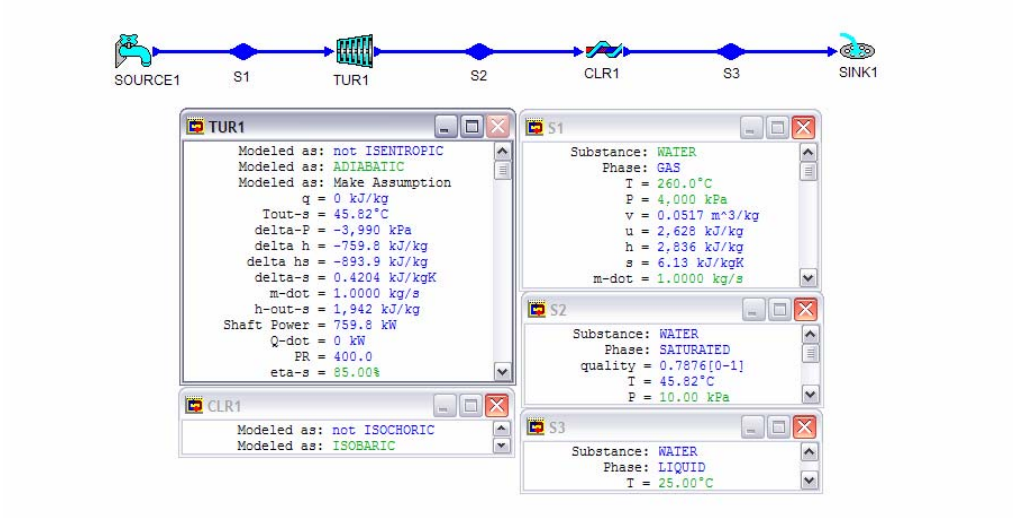

Figure E8.12.1. Waste heat engine.

Homework 8.12. Waste Heat Engines

1. What is a waste heat engine?
2. At a solid waste energy source, steam at 3000 kPa and 250EC is available at a mass flow rate of 1 kg/s. A barometric condenser at 10 kPa is used to decrease the turbine exhaust temperature. The turbine efficiency is 85%. Cooling water is available at 30EC. Find the power produced by the solid waste power plant.

ANSWER: Power=753.0 kW

8.13. Vapor Cycle Working Fluids

Water has been used mainly as the working fluid in the vapor power examples of this chapter. In fact, water is the most common fluid in large central power plants, though by no means is it the only working fluid used in vapor power cycles. The desirable properties of the vapor cycle working fluid include the following eight important characters.

1. High critical temperature– to permit evaporation at high temperature.
2. Low saturation (boiling) pressure at high temperature– to minimize the pressure vessel and piping costs.
3. Pressure around ambient pressure at condenser temperature– to eliminate serious air leakage and sealing problems.
4. Rapidly diverging pressure lines on the h-s diagram– to minimize the back-work ratio and to make reheat modification most effective.
5. Large enthalpy of evaporation– to minimize the mass flow rate for given power output.
6. No degrading aspects– non-corrosive, non-clogging, etc.
7. No hazardous features– non-toxic, inflammable, etc.

8. Low cost readily available.

There are six vapor working fluids listed on the menu of CyclePad. The fluids are ammonia, methane, refrigerant 12, refrigerant 22, refrigerant 134a, and water. Water has the characteristics of items 4, 5, 7 and 8 above and water remains a top choice for industrial central vapor power plant. Hence steam power engineering remains the most important area of applied thermodynamics.

Homework 8.13. Vapor Cycle Working Fluids

1. Why water is the most popular working fluid choice in central vapor power plants?
2. List at least four desirable characteristics of a vapor cycle working fluid.
3. Is there a perfect fluid that has all desirable characteristics of a vapor cycle working fluid?
4. Is water saturation pressures at the maximum and minimumcycle temperatures within a central power plant range poor?
5. Since no single working fluid better than water has been found. An engineer proposes to use a combination of fluids such that one is well suited to the high temperature part and other to the low temperature part of the cycle. Justify his proposal.
6. The ocean surface water is warm (27EC at equator) and deep ocean water is cold (5EC at 2000 m depth). If a vapor cycle operates between these two thermal reservoirs, is water or refrigerant a better choice as the working fluid for this power plant?

8.14. KALINA CYCLE

Thermal reservoirs are not infinitely large in the real world. Therefore, the temperature of a thermal reservoir is not constant when heat is added to or removed from the reservoir.

Kalina and his associates [Reference: Kalina, A.I., Combined-cycle system with novel bottoming cycle, *ASME Transaction Journal of Engineering for Gas Turbines and Power*, v106, n4, pp737-742, 1984] have proposed the use of a mixture of ammonia and water as the working fluid for a vapor Rankine power plant. Since ammonia is more volatile than water, boiling of an ammonia-water mixture starts at a lower temperature and the vapor phase has a higher concentration of ammonia than the liquid phase. Moreover, the mixture temperature increases as the vaporization process progresses. Thus, the constant pressure heat transfer process temperature curve of the working fluid more closely matches that of the temperature distribution of its surrounding finite capacity thermal reservoir. The two isobaric processes lead to a higher degree (better) of heat transfer. These differences result in higher efficiency and specific work output. An additional advantage is a condenser pressure near atmospheric pressure.

Homework 8.14. Kalina Cycle

1. What is a Kalina cycle?
2. What are the advantages of a Kalina cycle?

8.15. NON-AZEOTROPIC MIXTURE RANKINE CYCLE

The thermodynamic performance of a vapor Rankine cycle may be improved potentially by using a non-azeotropic mixture working fluid such as ammonia-water [Reference: Wu, Chih, Non-azetropic mixture energy conversion, *Energy Conversion and Management*, v25, n2, pp199-206, 1985]. The *non-azeotropic mixture Rankine cycle* is a generalized Kalina cycle. A mixture of two or more different fluids is classified as azeotrope when such a mixture possesses its own thermodynamic properties, quite unlike the thermal and chemical characteristics of its components. A distinguishing feature of this type of fluid is its ability to maintain a permanent composition and uniform boiling point during evaporation, much the same as a pure simple fluid in that its transition from liquid to vapor phase (or vice versa) occurs at a constant pressure and temperature without any change in the composition. Otherwise, the mixture is called non-azetrope. A non-azeotropic mixture has a temperature distribution parallel to that of the thermal reservoir. Note that one of the requirements for the non-azeotropic mixture energy conversion improvement is to have non-constant temperature heat source and heat sink. The proper choosing of best combination of the non-azeotropic mixture is still not entirely understood. Uncertainties in modeling the thermodynamic and heat transfer aspects of the non-azeotropic mixture cycle are such that the probability of realizing significant net benefits in actual application is also not fully known.

An ideal non-azeotropic mixture Rankine cycle and an ideal Carnot cycle operating between a non-constant temperature heat source and a non-constant temperature heat sink are shown in the following T-s diagram, Figure 8.15.1. The ideal Carnot cycle consists of an isentropic compression process from state 1 to state 2, an isobaric heat addition process from state 2 to state 3, an isentropic expansion process from state 3 to state 4, and an isobaric heat removing process from state 3 to state 4. The ideal non-azeotropic mixture Rankine cycle consists of an isentropic compression process from state 5 to state 2, an isobaric heat addition process from state 2 to state 6, an isentropic expansion process from state 6 to state 4, and an isobaric heat removing process from state 4 to state 5, respectively. The inlet and exit temperature of the heating fluid (finite-heat-capacity heat source) in the hot-side heat exchanger are T_7 and T_8, and the inlet and exit temperature of the cooling fluid (finite-heat-capacity heat sink) in the hot-side heat exchanger are T_9 and T_{10}, respectively. It is clearly demonstrated that the temperature distribution curves of the ideal non-azeotropic mixture Rankine cycle (curve 2-6 and curve 4-5) are more closely matched to the temperature distribution curves of the heat source and heat sink (curve 7-8 and curve 9-10) than the temperature distribution curves of the Carnot cycle (curve 2-3 and curve 4-1).

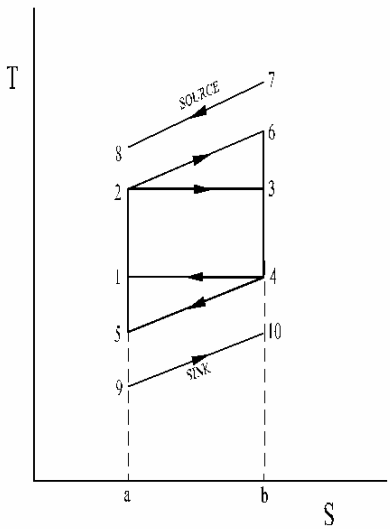

Figure 8.15.1. T-s diagram of ideal Non-azeotropic cycle and Carnot cycle.

Referring to Figure 8.15.1, the net work and heat added to the ideal non-azeotropic mixture Rankine cycle are $W_{net,non\text{-}aze}$=area52645 and $Q_{non\text{-}aze}$=area26ba2, and the net work and heat added to the Carnot cycle are $W_{netCarnot}$=area12341 and Q_{Carnot}=area23ba2, respectively. The cycle efficiency of the ideal Non-azeotropic mixture Rankine cycle is $0_{non\text{-}aze}=W_{net,non\text{-}aze}/Q_{non\text{-}aze}$=area52645/ area 26ba2. Similarly, The cycle efficiency of the Carnot cycle is $0_{Carnot}=W_{net,Carnot}/Q_{Carnot}$=area12341/ area 23ba2. Rearranging the expression of the cycle efficiency of the ideal Non-azeotropic mixture Rankine cycle gives

$0_{non\text{-}aze}=W_{net,non\text{-}aze}/Q_{non\text{-}aze}$=area52645/ area26ba2

=[area12341+area2632+area4514]/[area23ba2+area2632]

={area12341[1+(area2632/area12341)+(area4514/area12341)]}/{area 23ba2[1+(area2632/area23ba2)]}

$=0_{Carnot}$[1+(area 2632/area 12341)+(area 4514/area 12341)]/[1+(area 2632/area 23ba2)]

Since (area2632/area12341) is lager than (area2632/area23ba2), the factor [1+(area 2632/area 12341)+(area 4514/area 12341)]/[1+(area 2632/area 23ba2)] is lager than 1, and therefore $0_{non\text{-}aze}$ is larger than 0_{Carnot}.

Homework 8.15. Non-azeotropic mixture Rankine cycle

1. What is a non-azeotropic mixture?

2. Draw an isobaric heating process on a T-s diagram for a Non-azeotropic mixture from a compressed liquid state to a superheated vapor state. Does temperature remain the same during the boiling region?
3. Why the thermodynamic performance of a vapor Rankine cycle may be improved potentially by using a non-azeotropic mixture working fluid?

8.16. SUPER-CRITICAL CYCLE

Thermodynamic power cycles most commonly used today are the vapor Rankine cycle and the gas Brayton cycle. Both are characterized by two isobaric and two isentropic processes. The vapor Rankine cycle operates mainly in the saturated region of its working fluid whereas the gas Brayton cycle processes are located entirely in the superheat or gas region.

The simple Rankine cycle is inherently efficient. Heat is added and rejected isothermally and therefore the ideal Rankine cycle can achieve a high percentage of Carnot cycle efficiency between the same temperatures. Pressure rise in the cycle is accomplished by pumping a liquid, which is an efficient process requiring small work input. The back work ratio is large.

However, the temperature range of the Rankine cycle is severely limited by the nature of the working fluid–water. Adding superheat in an attempt to circumvent this will depart the cycle from isothermal heat addition. Increasing the temperature range without superheat leads to excessive moisture content in the vapor turbines, resulting in blade erosion.

The gas Brayton cycle adds heat at isobaric process over a large temperature range. The temperature level is independent of the pressure level. No blade erosion occurs in the gas turbine. However, the compression process of the gas Brayton cycle requires large work input. The back work ratio is small.

A cycle retains the advantages and avoids the problems of the two cycles has been devised. This cycle operates entirely above the critical pressure of its working fluid. The cycle is called *super-critical cycle*.

The Supercritical cycle is shown on the T-s diagram of a pure substance (Figure 8.16.1). The cycle is composed of the following four processes:

1-2 isentropic compression
2-3 isobaric heat addition
3-4 isentropic expansion
4-1 isobaric heat removing

Pure substance enters the pump at state 1 as a low pressure saturated liquid to avoid the cavitation problem and exits at state 2 as a high pressure (over critical pressure) compressed liquid. The heat supplied in the boiler raises the liquid from the compressed liquid at state 2 to a much higher temperature superheated vapor at state 3. The superheated vapor at state 3 enters the turbine where it expands to state 4. The exhaust vapor from the turbine enters the condenser at state 4 and is condensed at constant pressure to state 1 as saturated liquid.

The analysis of the super-critical cycle is the same way as that of the Rankine cycle. However, it requires special thermodynamic property tables in the high temperature and high

pressure range (over critical temperature and critical pressure) of the working fluid. There is no such table in the CyclePad working fluid menu. In principle, the super-critical cycle can be operated with any pure substance. In practice, the choice of working fluid controls the range of cycle operating pressures and temperatures. For example, the critical pressure and critical temperature of ammonia, carbon dioxide, and water are (11.28 Mpa and 405.5 K), (7.39 Mpa and 304.2 K), and (22.09 Mpa and 647.3 K), respectively.

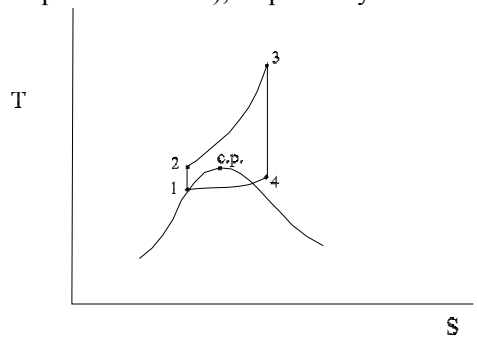

Figure 8.16.1. T-s diagram of Super-critical cycle.

Carbon dioxide is a good potential working fluid for the super-critical cycle for several good reasons. The critical pressure of carbon dioxide is one third that of water. Carbon dioxide is known to be a stable and inert material through the temperature range of industrial power generation. It is also abundant, non-toxic and relative inexpensive.

Numerical example of carbon dioxide super-critical cycle has been made by Feher (Reference: Feher, E.G., The super-critical thermodynamic power cycle, *Energy Conversion*, 8, 85-90, 1968). The reasons for the neglect of the super-critical cycle until now are not known.

Homework 8.16. Super-Critical Cycle

1. What is the advantages of a Rankine cycle in the compression process?
2. What is the disadvantages of a Rankine cycle in the expansion process?
3. What is the disadvantages of a Brayton cycle in the compression process?
4. What is the advantages of a Brayton cycle in the expansion process?
5. What is the concept of a super-critical cycle?
6. What are the processes of a super-critical cycle?
7. Why carbon dioxide is a better working fluid than water for a super-critical cycle?

8.17. DESIGN EXAMPLES

CyclePad is to a power engineer what a word processor is to a journalist. The benefits of using this software are numerous. The first benefit is that significantly less time is spent doing numerical analysis. As an engineer, this is much appreciated because design computation work that would have taken hours before can now be done in seconds. Second, CyclePad is capable of analyzing cycles with various working fluids. Third, due to its computer assisted

modeling capabilities, the software allows users to immediately view the effects of varying input parameters, either through calculated results or in the form of graphs and diagrams, giving the user a greater appreciation of how a system actually works. More specifically, there is the feature that provides the designer the opportunity to optimize a specific power cycle parameter. The designer is able to gain extensive design experience in a short time. Last, and most important, is the built-in coaching facility that provides definitions of terms and descriptions of calculations. CyclePad goes a step further by informing the inexperience designer if a contradiction or an incompatability exists within a cycle and why.

When viewing the applicability of CyclePad, users can have benefits at all stages of an engineering career. For the young engineer, just beginning the design learning process, less time is spent doing iterations resulting in more time dedicated to reinforcing the fundamentals and gaining valuable experience. In the case of the seasoned engineer, who is well indoctrinated in the principles and has gained an engineer's intuition, they can augment their abilities by becoming more computer literate. The following examples illustrate the design of vapor power cycles using CyclePad.

Example 8.17.1.

A 4-stage turbine with reheat and 3-stage regenerative steam Rankine cycle as shown in Figure E8.17.1a was designed by a junior engineer. The following design information are provided:

p_1=103 kPa, T_1=15EC, T_2=25EC, p_4=16000 kPa, T_4=570EC, $mdot_4$=1000 kg/s, p_5=8000 kPa, T_6=540EC, p_8=4000 kPa, p_{10}=2000 kPa, p_{12}=15 kPa, x_{13}=0, x_{15}=0, x_{19}=0, $0_{turbine\#1}$=0.85, $0_{turbine\#2}$=0.85, $0_{turbine\#3}$=0.85, $0_{turbine\#4}$=0.85, $0_{pump\#1}$=0.9, $0_{pump\#2}$=0.9, $0_{pump\#3}$=0.9, and $0_{pump\#4}$=0.9.

Find 0_{cycle}, $Wdot_{input}$, $Wdot_{output}$, $Wdot_{net\ output}$, $Qdot_{add}$, $Qdot_{remove}$, $Wdot_{turbine\#1}$, $Wdot_{turbine\#2}$, $Wdot_{turbine\#3}$, $Wdot_{turbine\#4}$, $Wdot_{pump\#1}$, $Wdot_{pump\#2}$, $Wdot_{pump\#3}$, $Wdot_{pump\#4}$, $Qdot_{htr\#1}$, $Qdot_{htr\#2}$, $Qdot_{HX1}$, $mdot_{20}$, $mdot_{21}$, $mdot_{22}$, $mdot_{12}$, $mdot_{15}$, $mdot_{17}$, and $mdot_{19}$.

Based on the preliminary design results, try to improve his design. Use 0_{cycle} as the objective function and p_5, p_8 and p_{10} as design parameters.

Draw the 0_{cycle} versus p_5 sensitivity diagram, the 0_{cycle} versus p_8 sensitivity diagram, and the 0_{cycle} versus p_{10} sensitivity diagram.

To solve this problem by CyclePad, we take the following steps:

1. Build
   (A) Take a source, a sink, four pumps, a boiler (HTR1), four turbines, a re-heater (HTR2), three splitters, three mixing chambers (open feed-water heaters) and a heat exchanger (condenser) from the inventory shop and connect the devices to form the 4-stage turbine with reheat and 3-stage regenerative Rankine cycle.
   (B) Switch to analysis mode.
2. Analysis

(A) Assume a process for each of the devices: (a) pumps as adiabatic, (b) boiler and re-heater as isobaric, (c) turbines as adiabatic, (d) splitters as iso-parametric, (e) mixing chambers and (f) heat exchanger as isobaric.

(B) Input the given information: working fluid is water in Cycle A and Cycle B, p_1=103 kPa, T_1=15EC, T_2=25EC, p_4=16000 kPa, T_4=570EC, mdot$_4$=1000 kg/s, p_5=8000 kPa, T_6=540EC, p_8=4000 kPa, p_{10}=2000 kPa, p_{12}=15 kPa, x_{13}=0, x_{15}=0, x_{19}=0, $0_{turbine\#1}$=0.85, $0_{turbine\#2}$=0.85, $0_{turbine\#3}$=0.85, $0_{turbine\#4}$=0.85, $0_{pump\#1}$=0.9, $0_{pump\#2}$=0.9, $0_{pump\#3}$=0.9, and $0_{pump\#4}$=0.9 as shown in Figure E8.17.1b.

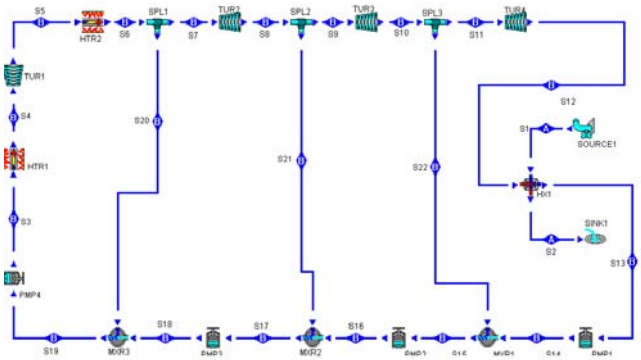

Figure E8.17.1a. 4-stage turbine with reheat and 3-stage regenerative Rankine cycle.

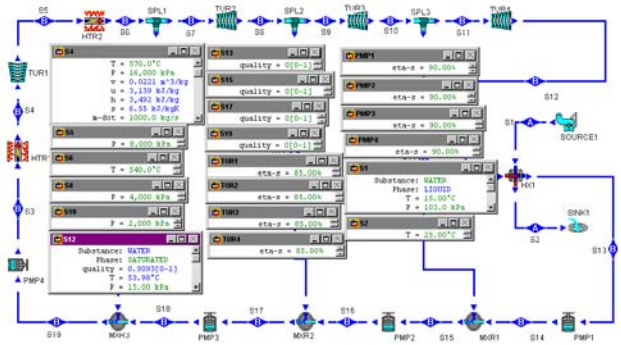

Figure E8.17.1b. 4-stage turbine with reheat and 3-stage regenerative Rankine cycle.

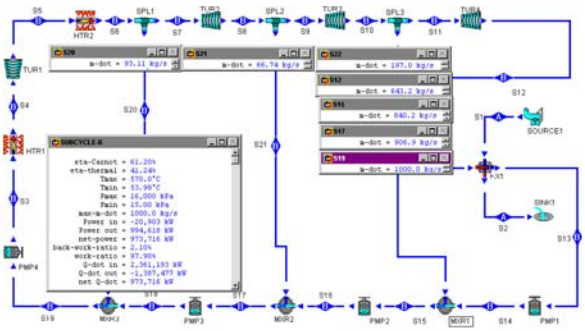

Figure E8.17.1c. 4-stage turbine with reheat and 3-stage regenerative Rankine cycle.

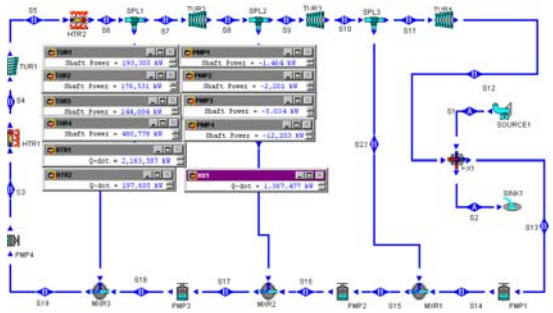

Figure E8.17.1d. 4-stage turbine with reheat and 3-stage regenerative Rankine cycle.

3. Display the preliminary design results as shown in Figure E8.17.1c and Figure E8.17.1d. The results are:

0_{cycle}=41.24%, $Wdot_{input}$=-20903 kW, $Wdot_{output}$=994618 kW, $Wdot_{net\ output}$=973716 kW, $Qdot_{add}$=2361193 kW, $Qdot_{remove}$=-1387477 kW, $Wdot_{turbine\#1}$=193305 kW, $Wdot_{turbine\#2}$=176531 kW, $Wdot_{turbine\#3}$=144004 kW, $Wdot_{turbine\#4}$=480778 kW, $Wdot_{pump\#1}$=-1464 kW, $Wdot_{pump\#2}$=-2201 kW, $Wdot_{pump\#3}$=-5034 kW, $Wdot_{pump\#4}$=-12203 kW, $Qdot_{htr\#1}$=2163587 kW, $Qdot_{htr\#2}$=197605 kW, $Qdot_{HX1}$=-1387477 kW, $mdot_{20}$=93.11 kg/s, $mdot_{21}$=66.74 kg/s, $mdot_{22}$=197.0 kg/s, $mdot_{12}$=643.2 kg/s, $mdot_{15}$=840.2 kg/s, $mdot_{17}$=906.9 kg/s and $mdot_{19}$=1000 kg/s.

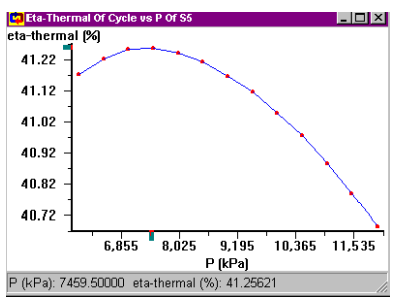

Figure E8.17.1e. Rankine cycle sensitivity diagram

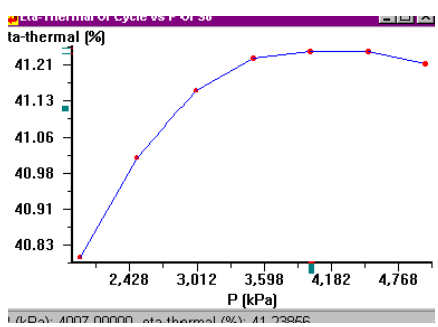

Figure E8.17.1f. 4-stage turbine with reheat and 3-stage regenerative Rankine cycle sensitivity diagram.

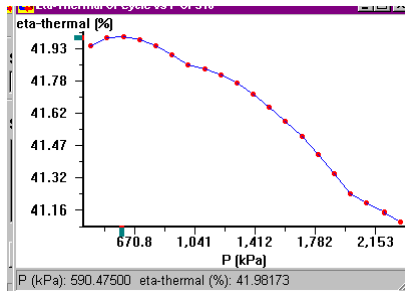

Figure E8.17.1g. 4-stage turbine with reheat and 3-stage regenerative Rankine cycle sensitivity diagram

4. The 0_{cycle} versus p_5 sensitivity diagram, the 0_{cycle} versus p_8 sensitivity diagram, and the 0_{cycle} versus p_{10} sensitivity diagram are drawn as shown in Figure E8.17.1e, Figure E8.17.1f, and Figure E8.17.1g, respectively. Based on these sensitivity diagrams, 0_{cycle} can be optimized.

Example 8.17.2.

A closed-cycle steam Rankine cycle without superheating is designed by a junior engineer as illustrated in Figure E8.17.2a with the following preliminary design information:

Condenser pressure	5 psia
Boiler pressure	3000 psia
Mass flow rate of steam	1 lbm/s
Flue gas temperature entering high-temperature side heat exchanger	3500EF
Flue gas pressure entering high-temperature side heat exchanger	14.7 psia
Flue gas leaving high-temperature side heat exchanger	1500EF
Cooling water temperature entering low-temperature side heat exchanger	60EF
Cooling water pressure entering low-temperature side heat exchanger	14.7 psia
Cooling water leaving low-temperature side heat exchanger	80EF
Turbine efficiency	88%
Pump efficiency	88%

Use net power output as the objective function and boiler pressure as the independent design parameter. Try to improve the preliminary design.

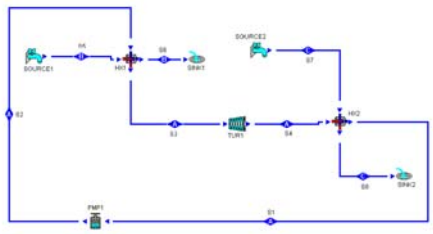

Figure E8.17.2a. Rankine cycle preliminary design.

(A) To improve the design with CyclePad, we take the following steps:

1. Build as shown in Figure E8.17.2a
2. Analysis

Assume a process for each of the four devices: (a) pump as adiabatic with 88% efficiency, (b) turbine as adiabatic with 88% efficiency, (c) heat exchanger 1 (boiler) as isobaric on both cold-side and hot-side, and (d) heat exchanger 2 (condenser) as isobaric on both cold-side and hot-side.

Input the given information: (a) working fluid of heat source is air (flue gas), p_5=14.7 psia, T_5=3500EF and T_6=1500EF, (b) working fluid of Rankine cycle is water, p_1=5 psia, x_1=0, p_3=3000 psia, and x_3=1, and (c) working fluid of heat sink is water, p_7=14.7 psia, T_7=60EF and T_6=80EF as shown in Figure E8.17.2b.

(B) Determine the preliminary design results.

Display result: The preliminary design results are given in Figure E8.17.2c as follows:

$Wdot_{pump}$=-14.58 hp, $Wdot_{turbine}$=389.3 hp, $Wdot_{net}$=374.7 hp, $Qdot_{boiler}$=877.5 Btu/s, $Qdot_{condenser}$=-612.6 Btu/s, 0=30.18%, $mdot_{flue\ gas}$=1.83 lbm/s, and $mdot_{cold\ water}$=30.66 lbm/s.

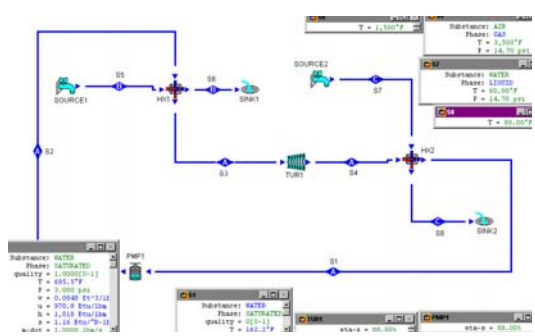

Figure E8.17.2b. Rankine cycle preliminary design input data.

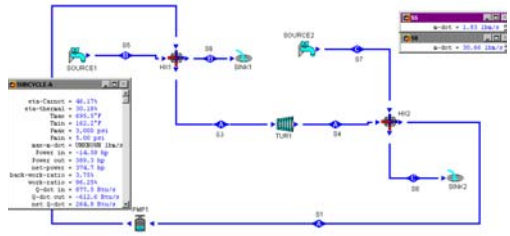

Figure E8.17.2c. Rankine cycle preliminary design output data

(C) Draw the net power vs p_3 sensitivity diagram as shown in Figure E8.17.2d. It is shown that the maximum net power is about 430 hp at about 1500 psia.

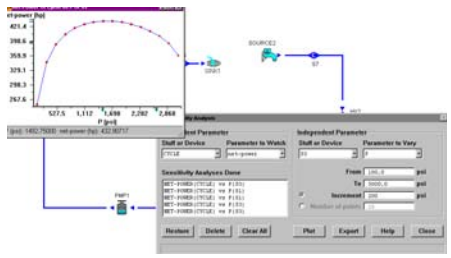

Figure E8.17.2d. Rankine cycle sensitivity diagram.

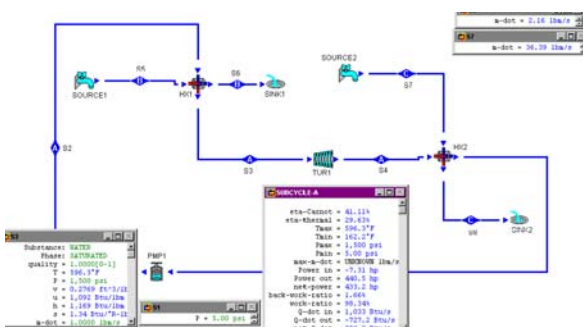

Figure E8.17.2e. Rankine cycle optimized design output data

(D) Change design input information

Change p_3 from 3000 psia to 1500 psia and displace results. The results are shown in Figure E8.17.2e.

Display result: The optimized design results are:

$Wdot_{pump}$=-7.31 hp, $Wdot_{turbine}$=440.5 hp, $Wdot_{net}$=433.2 hp, $Qdot_{boiler}$=1033 Btu/s, $Qdot_{condenser}$=-727.7 Btu/s, 0=29.63%, $mdot_{flue\ gas}$=2.16 lbm/s, and $mdot_{cold\ water}$=36.39 lbm/s.

Homework 8.17. Design

1. A 4-stage turbine with reheat and 3-stage regenerative Rankine cycle as shown in Figure P8.17.1a using steam as the working fluid. The following information are provided:
   p_1=103 kPa, T_1=15EC, T_2=25EC, p_4=16000 kPa, T_4=600EC, $mdot_4$=1000 kg/s, p_5=8000 kPa, T_6=540EC, p_8=4000 kPa, p_{10}=2000 kPa, p_{12}=15 kPa, x_{13}=0, x_{15}=0, x_{19}=0, $0_{turbine\#1}$=0.85, $0_{turbine\#2}$=0.85, $0_{turbine\#3}$=0.85, $0_{turbine\#4}$=0.85, $0_{pump\#1}$=0.85, $0_{pump\#2}$=0.85, $0_{pump\#3}$=0.85, and $0_{pump\#4}$=0.85.
   Find 0_{cycle}, $Wdot_{input}$, $Wdot_{output}$, $Wdot_{net\ output}$, $Qdot_{add}$, $Qdot_{remove}$, $Wdot_{turbine\#1}$, $Wdot_{turbine\#2}$, $Wdot_{turbine\#3}$, $Wdot_{turbine\#4}$, $Qdot_{htr\#1}$, $Qdot_{htr\#2}$, $Qdot_{HX1}$, $mdot_{20}$, $mdot_{21}$, $mdot_{22}$, $mdot_{12}$, $mdot_{15}$, $mdot_{17}$, and $mdot_{19}$.
   Draw the 0_{cycle} versus p_5 sensitivity diagram, the 0_{cycle} versus p_8 sensitivity diagram, and the 0_{cycle} versus p_{10} sensitivity diagram.
   ANSWER: 0_{cycle}=41.75%, $Wdot_{input}$=-20985 kW, $Wdot_{output}$=1067259 kW, $Wdot_{net\ output}$=1046274 kW, $Qdot_{add}$=2505993 kW, $Qdot_{remove}$=-1459718 kW, $Wdot_{turbine\#1}$=193305 kW, $Wdot_{turbine\#2}$=193484 kW, $Wdot_{turbine\#3}$=158701 kW, $Wdot_{turbine\#4}$=521769 kW, $Qdot_{htr\#1}$=2163587 kW, $Qdot_{htr\#2}$=342405 kW, $Qdot_{HX1}$=-1459718 kW, $mdot_{20}$=87.82 kg/s, $mdot_{21}$=63.73 kg/s, $mdot_{22}$=191.5 kg/s, $mdot_{12}$=656.9 kg/s, $mdot_{15}$=848.5 kg/s, $mdot_{17}$=912.2 kg/s and $mdot_{19}$=1000 kg/s.
2. A 4-stage turbine with reheat and 3-stage regenerative Rankine cycle as shown in Figure E8.17.1a using steam as the working fluid. The following information are provided:
   p_1=103 kPa, T_1=15EC, T_2=25EC, p_4=16000 kPa, T_4=600EC, $mdot_4$=1000 kg/s, p_5=7000 kPa, T_6=540EC, p_8=4000 kPa, p_{10}=2000 kPa, p_{12}=15 kPa, x_{13}=0, x_{15}=0, x_{19}=0, $0_{turbine\#1}$=0.85, $0_{turbine\#2}$=0.85, $0_{turbine\#3}$=0.85, $0_{turbine\#4}$=0.85, $0_{pump\#1}$=0.9, $0_{pump\#2}$=0.9, $0_{pump\#3}$=0.9, and $0_{pump\#4}$=0.9.
   Find 0_{cycle}, $Wdot_{input}$, $Wdot_{output}$, $Wdot_{net\ output}$, $Qdot_{add}$, $Qdot_{remove}$, $Wdot_{turbine\#1}$, $Wdot_{turbine\#2}$, $Wdot_{turbine\#3}$, $Wdot_{turbine\#4}$, $Qdot_{htr\#1}$, $Qdot_{htr\#2}$, $Qdot_{HX1}$, $mdot_{20}$, $mdot_{21}$, $mdot_{22}$, $mdot_{12}$, $mdot_{15}$, $mdot_{17}$, and $mdot_{19}$.
   Draw the 0_{cycle} versus p_5 sensitivity diagram, the 0_{cycle} versus p_8 sensitivity diagram, and the 0_{cycle} versus p_{10} sensitivity diagram.
3. A closed-cycle steam Rankine cycle without superheating is designed by a junior engineer as illustrated in Figure E8.17.2a with the following preliminary design information:

Condenser pressure	5 psia
Boiler pressure	2000 psia
Mass flow rate of steam	1 lbm/s
Flue gas temperature entering high-temperature side heat exchanger	3000EF
Flue gas pressure entering high-temperature side heat exchanger	14.7 psia
Flue gas leaving high-temperature side heat exchanger	1000EF
Cooling water temperature entering low-temperature side heat exchanger	50EF

Cooling water pressure entering low-temperature side heat exchanger	14.7 psia
Cooling water leaving low-temperature side heat exchanger	70EF
Turbine efficiency	85%
Pump efficiency	85%

Use net power output as the objective function and boiler pressure as the independent design parameter. Try to improve the preliminary design.

4. A closed-cycle steam Rankine cycle without superheating is designed by a junior engineer as illustrated in Figure E8.17.2a with the following preliminary design information:

Condenser pressure	10 kPa
Boiler pressure	16000 kPa
Mass flow rate of steam	1 kg/s
Flue gas temperature entering high-temperature side heat exchanger	2000EC
Flue gas pressure entering high-temperature side heat exchanger	101 psia
Flue gas leaving high-temperature side heat exchanger	1000EC
Cooling water temperature entering low-temperature side heat exchanger	14EC
Cooling water pressure entering low-temperature side heat exchanger	101 kPa
Cooling water leaving low-temperature side heat exchanger	20EC
Turbine efficiency	85%
Pump efficiency	85%

Use net power output as the objective function and boiler pressure as the independent design parameter. Try to improve the preliminary design.

5. A Rankine steam power plant is to be designed as shown in the following diagram (Figure P8.17.5). In the ordinary operating mode (cycle 1-2-3-4-5-6-7-8-9-1), the expansion valve would be closed and the steam from the boiler and superheater would pass through the high-pressure turbine to the reheater and into the low-pressure turbine.
When the high-pressure turbine is out of service, the plant would operate in an emergency mode (cycle 1-2-3-10-11-7-8-9-1) in which the steam from the boiler would pass through the expansion valve directly into the low-pressure turbine.

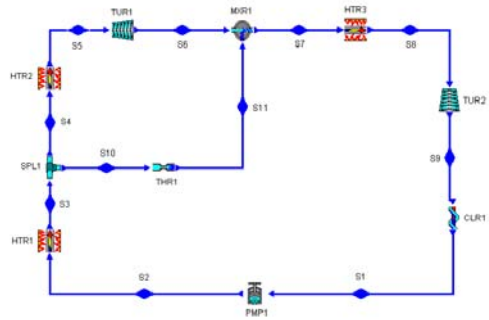

Figure P8.17.5. Rankine cycle design.

The design data are: $mdot_1$=1kg/s, x_3=1, $p_{condenser}$=8 kPa, p_{boiler}=10000 kPa, $p_{reheater}$=500 kPa, $T_{superheater\ exit}$=773 K, $T_{reheater\ exit}$=713 K, $0_{HPturbine}$=$0_{LPturbine}$=0.9.

(A) Draw the two cycles on T-s diagrams.

(B) Find the efficiency of each cycle.

(C) Find the output power per unit mass flow rate of the steam in the ordinary operating mode.

(D) Find the output power in the emergency mode for the same mass flow rate.

ANSWER: (B) 37.39%, 24.59%; (B) power output=1438 kW, power input=-10.09 kW, net power output=1428 kW, rate of heat input=3820 kW; (C) power output=790 kW, power input=-10.09 kW, net power output=779.9 kW, rate of heat input=3172 kW.

6. A Rankine steam power plant is to be designed as shown in the following diagram (Figure P8.17.5). In the ordinary operating mode (cycle 1-2-3-4-5-6-7-8-9-1), the expansion valve would be closed and the steam from the boiler and superheater would pass through the high-pressure turbine to the reheater and into the low-pressure turbine.

   When the high-pressure turbine is out of service, the plant would operate in an emergency mode (cycle 1-2-3-10-11-7-8-9-1) in which the steam from the boiler would pass through the expansion valve directly into the low-pressure turbine.

   The design data are: $mdot_1$=1lbm/s, x_3=1, $p_{condenser}$=1 psia, p_{boiler}=1400 psia, $p_{reheater}$=80 psia, $T_{superheater\ exit}$=900EF, $T_{reheater\ exit}$=800EF, $0_{HPturbine}$=$0_{LPturbine}$=0.9.

   (A) Draw the two cycles on T-s diagrams.

   (B) Find the efficiency of each cycle.

   (C) Find the output power per unit mass flow rate of the steam in the ordinary operating mode.

   (D) Find the output power in the emergency mode for the same mass flow rate.

   ANSWER: (B) 37.36%, 25.24%; (B) power output=861.7 hp , power input=-5.92 hp, net power output=855.7 hp, rate of heat input=1619 Btu/s; (C) power output=490.4 hp , power input=-5.92 hp, net power output=484.5 hp, rate of heat input=1357 Btu/s.

7. One of the assumptions made in the analysis of basic Rankine heat engines in your thermodynamic textbook is that each component sees exactly the same flow of working fluid. This is not actually the case for a shipboard steam Rankine power plant. One obvious change in engine parameters will be the steam flow rates through

several components. The pump will see the engine's entire mass flow rate. Some steam is intentionally bled from the boiler outlet to drive ancillary equipment. The ship operator has an opportunity to control the rate at which steam is diverted.

A preliminary shipboard split-shaft and steam-bleed plant steam Rankine power plant is designed by a junior engineer. The split-shaft and steam-bleed plant includes a pump (PMP), a boiler (HTR), two splitters (SPL), two turbines (TUR), two throttling valves (THR), two mixing chambers (MXR), one heat exchanger (HX), one source (SOURCE) and one sink (SINK). Turbine #1 is used to produce auxiliary power includes lighting, cooling, ventilation, etc. Turbine #2 is the main turbine used to drive the propulsion system. Throttle valve #1 is used to provide low-pressure steam for auxiliary usage such as heating, laundry, dishwasher, hot shower, etc. Throttle valve #2 is used to control the power for the propulsion system. At cruise condition, throttle valve #2 is not used ($p_7 = p_8$). During the emergency maximum power condition, all the steam goes to turbine #2 ($mdot_5 = mdot_{10} = 0$). Sea-water is used to cool the condenser heat exchanger.

Assume the pump and turbines are adiabatic and isentropic, the boiler and mixing chambers isobaric, the heat exchanger isobaric on both hot-side and cold-side, and the splitters iso-parametric as shown in Figure P8.17.7a.

The input data as shown in Figure P8.17.7b are:

Pump inlet (state 1), water, saturated water, quality=0, 2 psia, and mdot=1 lbm/s.

Boiler exit (state 3), 600 psia and 600 F.

State 5, mdot=0.08 lbm/s.

State 8, 600 psia (cruise condition).

State 10, mdot=0.02 lbm/s.

Heat exchanger sea-water inlet (state 14), 14.7 psia and 55 F.

Heat exchanger sea-water exit (state 15), 65 F.

The heat engine output data at cruise condition as shown in Figure P8.17.7c are:

Pump input power=-2.56 hp, Turbine #1 power output=45.31 hp, Turbine #2 power output=509.7 hp, Heat transfer rate in the boiler=1193 Btu/s, Heat transfer rate in the heat exchanger=802.8 Btu/s, Cycle efficiency=32.72%, and Net power output=552.4 hp.

The sensitivity diagram of cycle efficiency versus p_8 is shown in Figure P8.17.7d.

The sensitivity diagram of cycle net power versus p_8 is shown in Figure P8.17.7e.

During the emergency maximum power condition, auxiliary usage of steam and auxiliary power are turn off, that is $mdot_5 = mdot_{10} = 0$ lbm/s. And then Pump input power=-2.56 hp, Turbine #1 power output=0 hp, Turbine #2 power output=566.3 hp, Heat transfer rate in the boiler=1193 Btu/s, Cycle efficiency=33.39%, and Net power output=563.8 hp as shown in Figure P8.17.7f.

Do the following:

(A) Reproduce the above-mentioned design.

(B) Answer the following questions: (It is helpful to draw the cycle on a T-s diagram and show the cycle net work graphically)

a) What will happen if you decrease the inlet steam pressure to the main turbine (TUR2)? By assuming what process would the inlet steam pressure to the main turbine (TUR2) be reduced? Why would that happen? Describe briefly how the throttling valve is used to control the power output of the main turbine (TUR2)?

b) How would the cycle efficiency be affected if the condenser pressure were decreased? What process do you assume for the condenser? What would happen to the cycle efficiency if the condenser were assumed to be an isothermal process? Does the condenser pressure depend on the condenser temperature? Why the cycle efficiency is increased if the condenser pressure is decreased? Why do we assume the condenser process be isobaric rather than isothermal? The condenser pressure is limited to about 1 psia in practice by some factors. What are these factors?

c) How would the cycle efficiency be affected if the boiler pressure were lowered? What process do you assume for the superheated boiler? Does the boiler pressure depend on the boiler temperature? Why the cycle efficiency is increased if the boiler pressure is increased? The boiler pressure is limited in practice, why?

d) How would the cycle efficiency be affected if a regenerator were added? What process do you assume for the regenerator? Why the cycle efficiency is increased with regenerating?

e) How would the cycle work be affected if a reheater and an additional turbine were added? What process do you assume for the reheater? Why the cycle work is increased with reheating?

f) How would the cycle efficiency be affected if a reheater and an additional turbine were added? Why the cycle efficiency is not increased with regenerating?

g) Can you think of any other way to improve the cycle efficiency?

h) Can you think of any disadvantage by adding additional reheaters, turbines, and regenerators on the shipboard Rankine engine?

(C) The overall objective of the shipboard power plant is to convert the availability of the fuel into power in the most efficient manner, taking into consideration cost, space, safety, and environmental concerns. Using the cycle efficiency as the objective function, try to improve the design. The maximum pressure and maximum temperature of the steam are limited to 600 psia and 600 F, and condenser pressure is limited to 2 psia. You may add more components from the CyclePad inventory to the preliminary design. State what additional components are needed to your refinement cycle and your reasons why. It is recommended that some kinds of sensitivity analysis should be included.

(D) Design and explain your own new system and support your work with CyclePad simulation.

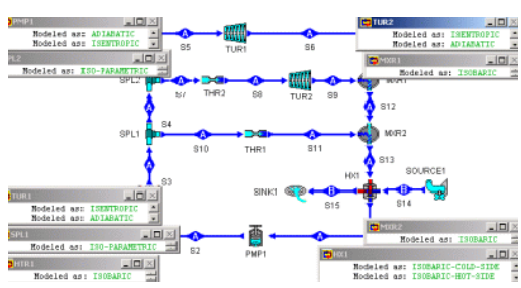

Figure P8.17.7a. Processes of shipboard Rankine power plant

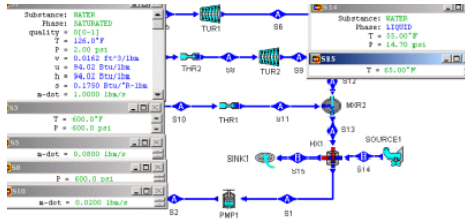

Figure P8.17.7b. Input Data of shipboard Rankine power plant

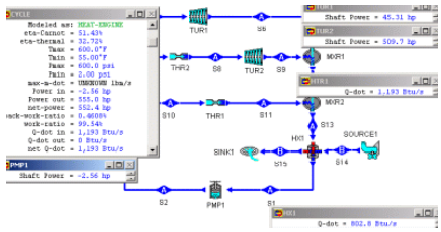

Figure P8.17.7c. Output Data of shipboard Rankine power plant

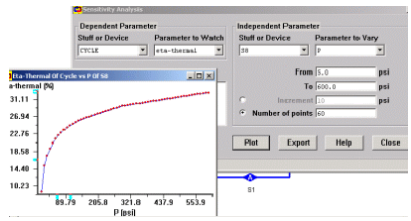

Figure P8.17.7d. Sensitivity diagram efficiency versus p_8

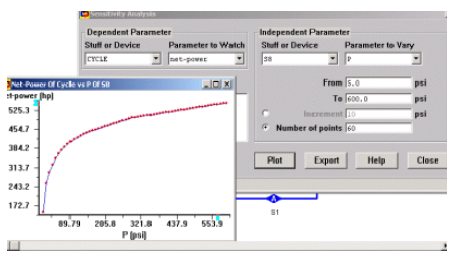

Figure P8.17.7e. Sensitivity diagram net power output versus p_8

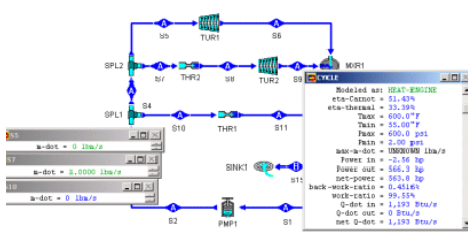

Figure P8.17.7f. Engine output data at emergency maximum power condition

8. In a reheat steam Rankine power plant, the boiler exit conditions are 4 Mpa and 450°C, the inlet conditions of the lower pressure turbine are 1 Mpa and 450°C, and the condenser pressure is 15 kPa. Both turbine efficiency are 80%. At a particular part-load operation, the high pressure turbine inlet pressure is purposely reduced by a throttle valve to 3 Mpa. How does this change the thermal efficiency of the cycle and, if so, by how much.
9. In a reheat steam Rankine power plant, the boiler exit conditions are 600 psia and 600°F, the inlet conditions of the lower pressure turbine are 400 psia and 600°F, and the condenser pressure is 5 psia. Both turbine efficiency are 82%. At a particular part-load operation, the high pressure turbine inlet pressure is purposely reduced by a throttle valve to 500 psia. How does this change the thermal efficiency of the cycle and, if so, by how much.

8.18 SUMMARY

The Carnot cycle is not a practical model for vapor power cycles because of cavitation and corrosion problems. The modified Carnot model for vapor power cycles is the basic Rankine cycle, which is made of two isobaric and two isentropic processes. The basic elements of the basic Rankine cycle are pump, boiler, turbine and condenser. Rankine cycle is the most popular heat engine to produce commercial power. The thermal cycle efficiency of the basic Rankine cycle can be improved by adding super-heater, regenerating and re-heater, among other means.

Chapter 9

GAS CLOSED SYSTEM CYCLES

9.1. OTTO CYCLE

A four stroke internal combustion engine was built by a German engineer, Nicholas Otto, in 1876. The cycle patterned after his design is called the *Otto cycle*. It is the most widely used internal combustion heat engine in automobiles.

The piston in a four stroke internal combustion engine executes four complete strokes as the crankshaft completes two revolution per cycle as shown in Figure 9.1.1. On the intake stroke, the intake valve is open and the piston moves downward in the cylinder, drawing in a premixed charge of gasoline and air until the piston reaches its lowest point of the stroke called *bottom dead center* (BDC). During the compression stroke the intake valve closes and the piston moves toward the top of the cylinder, compressing the fuel-air mixture. As the piston approaches the top of the cylinder called *top dead center* (TDC), the spark plug is energized and the mixture ignites, creating an increase in the temperature and pressure of the gas. During the expansion stroke the piston is forced down by the high pressure gas, producing a useful work output. The cycle is then completed when the exhaust valve opens and the piston moves toward the top of the cylinder, expelling the products of combustion.

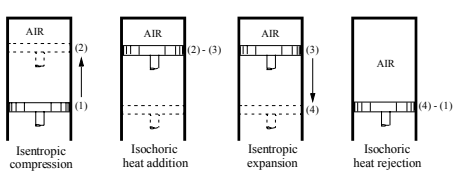

Figure 9.1.1. Otto cycle.

The thermodynamic analysis of an actual Otto cycle is complicated. To simplify the analysis, we consider an ideal Otto cycle composed entirely of internally reversible processes. In the Otto cycle analysis, a closed piston-cylinder assembly is used as a control mass system.

The cycle is made of the following four processes:

1-2 isentropic compression
2-3 constant volume heat addition
3-4 isentropic expansion
4-1 constant volume heat removing

The p-v and T-s process diagrams for the ideal two-stroke Otto cycle are illustrated in Figure 9.1.2.

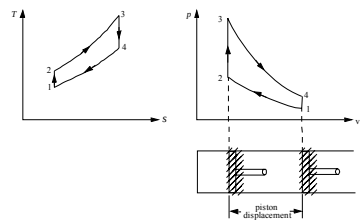

Figure 9.1.2. Otto cycle p-v and T-s diagrams.

Applying the First law and Second law of thermodynamics of the closed system to each of the four processes of the cycle yields:

$$W_{12} = IpdV \tag{9.1.1}$$

$$Q_{12} - W_{12} = m(u_2 - u_1),\ Q_{12}=0 \tag{9.1.2}$$

$$W_{23} = IpdV = 0 \tag{9.1.3}$$

$$Q_{23} - 0 = m(u_3 - u_2) \tag{9.1.4}$$

$$W_{34} = IpdV \tag{9.1.5}$$

$$Q_{34} - W_{34} = m(u_4 - u_3),\ Q_{34} =0 \tag{9.1.6}$$

$$W_{41} = IpdV = 0 \tag{9.1.7}$$

and

$$Q_{41} - 0 = m(u_1 - u_4) \tag{9.1.8}$$

The net work (W_{net}), which is also equal to net heat (Q_{net}), is

$$W_{net} =W_{12} +W_{34} = Q_{net} = Q_{23} + Q_{41} \tag{9.1.9}$$

The thermal efficiency of the cycle is

$$0 = W_{net} /Q_{23} = Q_{net} /Q_{23} = 1- Q_{41} /Q_{23} = 1- (u_4 - u_1)/(u_3 - u_2) \quad (9.1.10)$$

This expression for thermal efficiency of an ideal Otto cycle can be simplified if air is assumed to be the working fluid with constant specific heats. Equation (9.1.10) is reduced to:

$$0 = 1- (T_4 - T_1)/(T_3 - T_2) = 1-(r)^{1-k} \quad (9.1.11)$$

where r is the *compression ratio* for the engine defined by the equation

$$r = V_1 /V_2 \quad (9.1.12)$$

The compression ratio is the ratio of the cylinder volume at the beginning of the compression process (BDC) to the cylinder volume at the end of the compression process (TDC).

Equation (9.1.11) shows that the thermal efficiency of the Otto cycle is only a function of the compression ratio of the engine. Therefore, any engine design that increases the compression ratio should result in an increased engine efficiency. However, the compression ratio cannot be increased indefinitely. As the compression ratio increases, the temperature of the working fluid also increases during the compression process. Eventually, a temperature is reached that is sufficiently high to ignite the air-fuel mixture prematurely without the presence of a spark. This condition causes the engine to produce a noise called knock. The presence of *engine knock* places a barrier on the upper limit of Otto engine compression ratios. To reduce engine knock problem of a high compression ratio Otto cycle, one must use gasoline with higher octane rating. In general, the higher the octane rating number of gasoline, the higher the resistance of engine knock.

One way to simplify the calculation of the net work of the cycle and to provide a comparative measure of the performance of an Otto heat engine is to introduce the concept of the mean effective pressure. The *mean effective pressure* (MEP) is the average pressure of the cycle. The net work of the cycle is equal to the mean effective pressure multiplied by the displacement volume of the cylinder. That is

$$MEP = (\text{cycle net work})/(\text{cylinder displacement volume}) = W_{net}/(V_1-V_2)$$

The engine with the larger MEP value of two engines of equal cylinder displacement volume would be the better one, because it would produce a greater net work output.

The intake and exhaust in the two-stroke Otto cycle occur instantaneously. In order to make the intake and exhaust processes much better, a four-stroke Otto cycle is commonly used as shown in Figure 9.1.3.

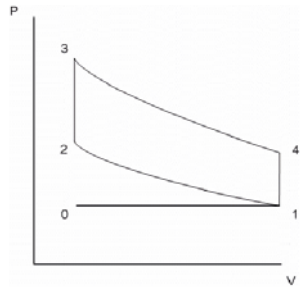

Figure 9.1.3.Four-stroke Otto cycle.

When the piston reaches BDC, the exhaust valve is opened, reducing cylinder pressure to the initial pressure, with a corresponding decrease of temperature (process 4-1). Finally to complete the four-stroke cycle, with the exhaust valve open, the piston is pushed upward (process 1-0), clearing the cylinder of the combustion gases. For each complete cycle of the four-stroke cycle, there are four strokes and hence two crankshaft revolutions. The power developed by the engine is give by

$$Wdot=W_{net}(N/2)$$

where Wdot is the power output, W_{net} is the net engine work output per cycle, and N is the crankshaft revolutions per unit time, respectively.

The Otto cycle can operate either on a two-stroke or a four-stroke cycle.

The advantage of the two-stroke Otto cycle is that it provides twice as many power strokes as the four-stroke cycle per cylinder per crank shaft revolution. However, the processes of intake and exhaust scavenging are not as efficient as those with a four-stroke cycle. It is possible to lose some of the fresh fuel-air mixture out of the exhaust prior to combustion, and it is also possible for an appreciable fraction of the burned gases to remain in the cylinder. For these reasons, the actual power output of the two-stroke cycle is certainly not twice as great as might be predicted from the number of power strokes per revolution. Also, the poor intake and scavenging efficiency of the two-stroke cycle leads to a worsening in fuel economy, compared to a four-stroke cycle. Furthermore, with the crankcase of the two-stroke cycle used for compressing the incoming charge, it is not available for lubrication. Therefore, the two-stroke engine cannot be lubricated as easily as the four-stroke engine. Oil must be mixed with the fuel in the two-stroke engine to achieve adequate lubrication. For all these reasons, the two-stroke Otto engine has only a limited application in which fuel economy and pollution are not primary factors.

Example 9.1.1.

An engine operates on the Otto cycle and has a compression ratio of 8. Fresh air enters the engine at 27EC and 100 kPa. The amount of heat addition is 700 kJ/kg. The amount of air mass in the cylinder is 0.01 kg. Determine the pressure and temperature at the end of the combustion, the pressure and temperature at the end of the expansion, MEP, efficiency and

work output per kilogram of air. Show the cycle on T-s diagram. Plot the sensitivity diagram of cycle efficiency vs compression ratio.

To solve this problem by CyclePad, we take the following steps:

1. Build
   (A) Take a compression device, a combustion chamber, an expander and a cooler from the closed system inventory shop and connect the four devices to form the Otto cycle as shown in Figure 9.1.2.
   (B) Switch to analysis mode.
2. Analysis
   (A) Assume a process for each of the four processes: (a) compression device as adiabatic and isentropic, (b) combustion as isochoric, (c) expander as adiabatic and isentropic, and (d) cooler as isochoric.
   (B) Input the given information: (a) working fluid is air, (b) the inlet pressure and temperature of the compression device are 100 kPa and 27EC, (c) the compression ratio of the compression device is 8, (d) the heat addition is 700 kJ/kg in the combustion chamber, and (e) m=0.01 kg.
3. Display results
   (A) Display the T-s diagram and cycle properties results as shown in Figure E9.1.1.a and b. The cycle is a heat engine. The answers are: p=4441 kPa and T=1393EC (the pressure and temperature at the end of the combustion), p=241.6 kPa and T=452.1EC (the pressure and temperature at the end of the expansion), MEP=525.0 kPa, 0=56.47% and Wnet=3.95 kJ, and
   (B) Display the sensitivity diagram of cycle efficiency vs compression ratio as shown in Figure E9.1.1.c.

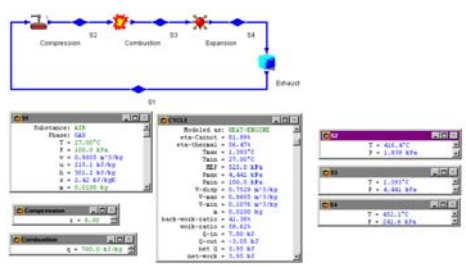

Figure E9.1.1a. Otto cycle

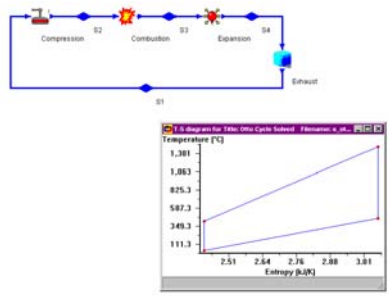

Figure E9.1.1b. Otto cycle T-s diagram

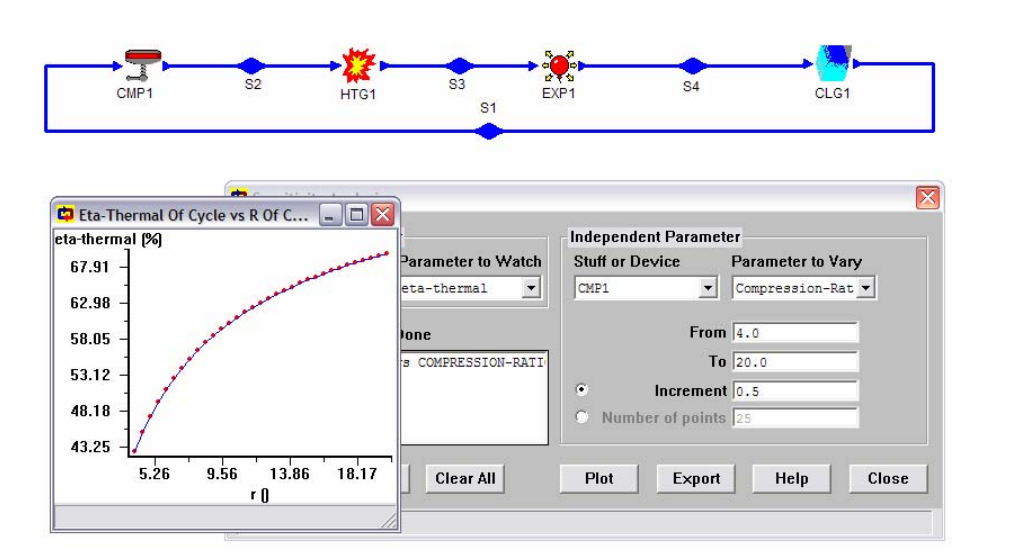

Figure E9.1.1c. Otto cycle sensitivity analysis

Comment: Efficiency increases as compression ratio increases.

Example 9.1.2.

The compression ratio in an Otto cycle is 8. If the air before compression (state 1) is at 60EF and 14.7 psia and 800 Btu/lbm is added to the cycle and the mass of air contained in the cylinder is 0.025 lbm, Calculate (a) temperature and pressure at each point of the cycle, (b) the heat must be removed, (c) the thermal efficiency, and (d) the MEP of the cycle.

To solve this problem by CyclePad, we take the following steps:

1. Build
   (A) Take a compression device, a combustion chamber, an expander and a cooler from the closed system inventory shop and connect the four devices to form the Otto cycle.
   (B) Switch to analysis mode.
2. Analysis

(A) Assume a process for each of the four processes: (a) compression device as isentropic, (b) combustion as isochoric, (c) expander as isentropic, and (d) cooler as isochoric.

(B) Input the given information: (a) working fluid is air, (b) the inlet pressure and temperature of the compression device are 60EF and 14.7 psia, (c) the compression ratio of the compression device is 8, and (d) the heat addition is 800 Btu/lbm in the combustion chamber, and (e) the mass of air is 0.025 lbm.

3. Display results

(A) Display the T-s diagram and cycle properties results as shown in Figure E9.1.2.a and b. The cycle is a heat engine. The answers are T_2=734.2 EF, p_2=270.2 psia, T_3=5,407 EF, p_3=1,328 psia, T_4=2,094 EF, p_4=72.24 psia, 0=56.47% , Q_{41}=-8.71 Btu, and MEP=213.3 psia.

(B) Display the T-s diagram.

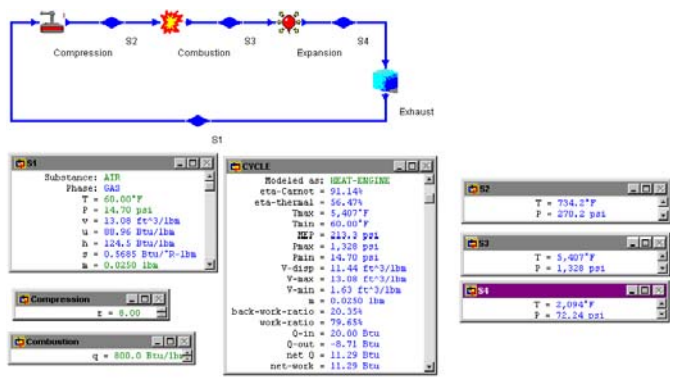

Figure E9.1.2a. Otto cycle.

The power output of the Otto cycle can be increased by turbo-charging the air before it enters the cylinder in the Otto engine. Since the inlet air density is increased due to higher inlet air pressure, the mass of air in the cylinder is increased. Turbo-charging raises the inlet air pressure of the engine above atmospheric pressure and raise the power output of the engine, but it may not improve the efficiency of the cycle. The schematic diagram of the Otto cycle with turbo-charging is illustrated in Figure 9.1.3. Example 9.1.3 and Example 9.1.4 show the power increase due to turbo-charging.

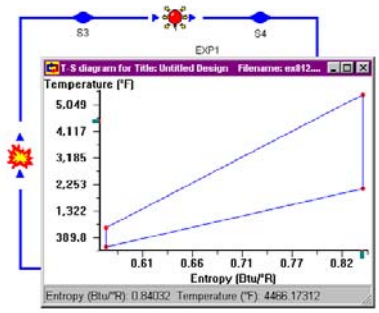

Figure E9.1.2b. Otto cycle T-s diagram plot.

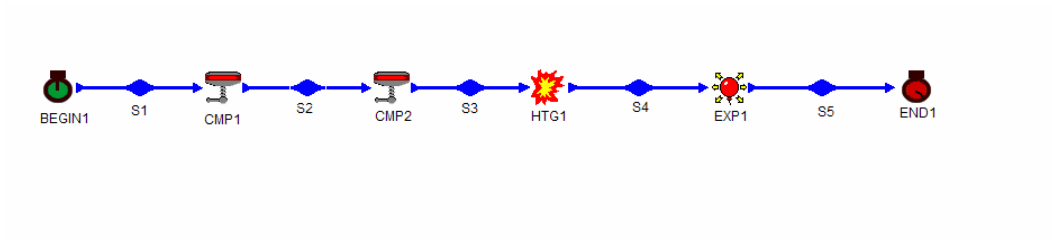

Figure 9.1.3. Otto engine with turbo-charging.

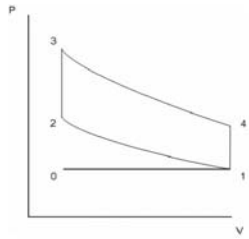

Figure E9.1.4. Otto engine without turbo-charging.

Example 9.1.3

Determine the heat supplied, work output, MEP, and thermal efficiency of an ideal Otto cycle with a compression ratio of 10. The highest temperature of the cycle is 3000EF. The volume of the cylinder before compression is 0.1 ft^3. What is the mass of air in the cylinder? The atmosphere conditions are 14.7 psia and 70EF.

To solve this problem, we build the cycle. Then (A) Assume isentropic for compression process 1-2, isentropic for compression process 2-3, isochoric for the heating process 3-4, isentropic for expansion process 4-5, and isochoric for the cooling process 5-6; (B) input p_1 =14.7 psia, T_1=70EF, V_1=0.1 ft^3; p_2=14.7 psia, T_2=70EF, V_2=0.1 ft^3 (no turbo-charger); compression ratio=10, T_4=3000EF, p_6=14.7 psia, and T_6=70EF; and (C) display results. The results are: W_{12}=-0 Btu, W_{23}=-1.03 Btu, Q_{34}=2.73 Btu, W_{45}=2.67 Btu, W_{net}=1.65 Btu, Q_{56}=-1.09 Btu, MEP=98.80 psia, 0=60.19%, and m=0.0075 lbm.

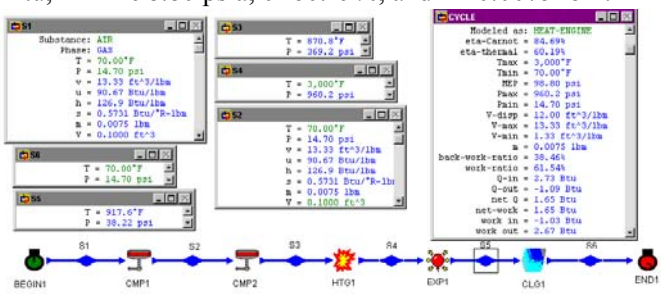

Figure E9.1.3. Otto engine without turbo-charging.

Example 9.1.4

Determine the heat supplied, work output, MEP, and thermal efficiency of an ideal Otto cycle with a turbo-charger which compresses air to 20 psia and compression ratio of 10. The highest temperature of the cycle is 3000EF. The volume of the cylinder before compression is 0.1 ft^3. What is the mass of air in the cylinder? The atmosphere conditions are 14.7 psia and 70EF.

To solve this problem, we build the cycle as shown in Figure 9.1.3. Then (A) Assume isentropic for compression process 1-2, isentropic for compression process 2-3, isochoric for the heating process 3-4, isentropic for expansion process 4-5, and isochoric for the cooling process 5-6; (B) input p_1 =14.7 psia, T_1=70EF; p_2=20 psia, V_2=0.1 ft^3 (with turbo-charger); compression ratio=10, T_4=3000EF, p_6=14.7 psia, and T_6=70EF; and (C) display results. The results are: W_{13}=-1.48 Btu, Q_{34}=3.21 Btu, W_{45}=3.52 Btu, W_{net}=2.04 Btu, Q_{56}=-1.17 Btu, MEP=96.20 psia, 0=63.54%, and m=0.0093 lbm.

Modern car Otto engine designs are affected by environmental constrains as well as desires to increase gas mileage. Recent design improvements include the use of four valves per cylinder to reduce the restriction to air flow into and out of the cylinder, turbo-charges to increase the air and fuel flow to each cylinder, catalytic converters to aid the combustion of unburned hydrocarbons that are expelled by the engine, among others.

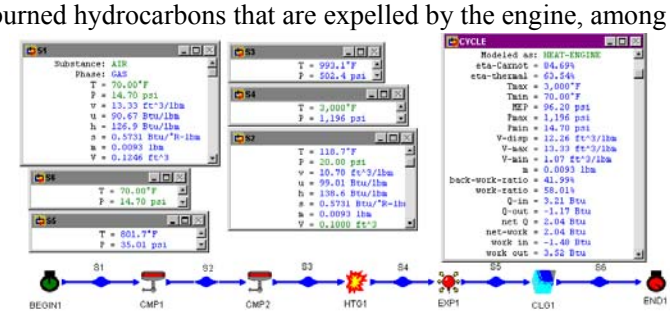

Figure E9.1.4. Otto engine with turbo-charging.

Homework 9.1. Otto Cycle

1. Do Otto heat engines operate on a closed system or an open system? Why?
2. List the four processes in the Otto cycle.
3. How does the two-stroke Otto cycle differ from the four-stroke Otto cycle?
4. What is the ratio of the number of power strokes in the two-stroke cycle divided by the number of power strokes in the four-stroke cycle at a given value of engine revolutions per minute?
5. On what single factor does the efficiency of the Otto cycle depend?

6. What is compression ratio of an Otto cycle? How does it affect the thermal efficiency of the cycle?
7. What limits the practical realization of higher efficiencies in the Otto cycle?
8. Do you know the compression ratio of your car? Is there any limit to an Otto cycle? Why?
9. Which area represents cycle net work of an Otto cycle plotted on a T-s diagram and p-v diagram?
10. How do you define MEP (mean effect pressure)? Can MEP of a car in operation lower than the atmospheric pressure?
11. What is engine knock? What cause the engine knock problem?
12. Do you get a better performance using premier gasoline (Octane number 93) for your compact car?
13. How does the modern Otto cycle achieve higher power output without the use of higher compression ratio?
14. How does the clearance volume affect the efficiency of the Otto cycle?
15. In an ideal Otto cycle, indicate whether the following statements are true or false:
    (A) All the processes are internally reversible.
    (B) Cycle efficiency increases with the maximum temperature.
    (C) There is a constant ratio between the work and the mean effective pressure.
    (D) The gas temperature after compression is higher than after expansion.
    (E) Cycle efficiency depends on the temperature ratio during compression.
16. Sketch T-s and p-v diagrams for the Otto cycle.
17. For an Otto cycle, plot the cycle efficiency as a function of compression ratio from 4 to 16.
18. For an Otto cycle, plot the MEP as a function of compression ratio from 4 to 16.
19. Does the initial state of the compression process have any influence on the Otto cycle efficiency?
20. What is the initial state of the compression process of your car?
21. How many parameters do you need to know to completely describe the Otto cycle?
22. The inlet and exhaust flow processes are not included in the analysis of the Otto cycle. How do these processes affect the Otto cycle performance?
23. How does the Otto cycle efficiency compare to the Carnot cycle efficiency when operating between the same temperature range?
24. As a car gets older, will its compression ratio change? How about the MEP?
25. An engine operates on an Otto cycle with a compression ratio of 8. At the beginning of the isentropic compression process, the volume, pressure and the temperature of the air are 0.01 m^3, 110 kPa and 50EC. At the end of the combustion process, the temperature is 900EC. Find (A) the temperature at the remaining two states of the Otto cycle, (B) the pressure of the gas at the end of the combustion process, (C) heat added per unit mass to the engine in the combustion chamber, (D) heat removed per unit mass from the engine to the environment, (E) the compression work per unit mass added, (F) the expansion work per unit mass done, (G) MEP, and (H) thermal cycle efficiency.
    ANSWER: (A) 469.3EC, 237.5EC, (B) 2022 kPa, (C) 3.67 kJ/kg, (D) -1.60 kJ/kg, (E) -300.5 kJ/kg, (F) 474.8 kJ/kg, (G) 236.6 kPa, (H) 56.47%.

26. An ideal Otto Cycle with air as the working fluid has a compression ratio of 9. At the beginning of the compression process, the air is at 290 K and 90 kPa. The peak temperature in the cycle is 1800 K. determine: (A) the pressure and temperature at the end of the expansion process (power stroke), (B) the heat per unit mass added in kJ/kg during the combustion process, (C) net work, (D) thermal efficiency of the cycle, and (E) mean effective pressure in kPa.
    ANSWER: (A) 232.0 kPa, 747.4 K, (B) 789.6 kJ/kg, (C) 461.7 kJ/kg, (D) 58.48%, (E) 562.3 kPa.
27. An ideal Otto engine receives air at 15 psia, 0.01 ft^3 and 65EF. The maximum cycle temperature is 3465EF and the compression ratio of the engine is 7.5. Determine (A) the work added during the compression process, (B) the heat added to the air during the heating process, (C) the work done during the expansion process, (D) the heat removed from the air during the cooling process, and (E) the thermal efficiency of the cycle.
    ANSWER: (A) -0.1625 Btu, (B) 0.3638 Btu, (C) 0.2873 Btu, (D) -0.1625 Btu, (E) 55.33%.
28. An ideal Otto engine receives air at 14.6 psia and 55EF. The maximum cycle temperature is 3460EF and the compression ratio of the engine is 10. Determine (A) the work done per unit mass during the compression process, (B) the heat added per unit mass to the air during the heating process, (C) the work done per unit mass during the expansion process, (D) the heat removed per unit mass from the air during the cooling process, and (E) the thermal efficiency of the cycle.
    ANSWER: (A) -133.2 kJ/kg, (B) 449.7 kJ/kg, (C) 403.9 kJ/kg, (D) -179.0 kJ/kg, (E) 60.19%.
29. An ideal Otto engine receives air at 100 kPa and 25EC. Work is performed on the air in order to raise the pressure at the end of the compression process to 1378 kPa. 400 kJ/kg of heat is added to the air during the heating process. Determine (A) the work done during the compression process, (B) the compression ratio, (C) the work done during the expansion process, (D) the heat removed from the air during the cooling process, (E) the MEP (mean effective pressure), and (F) the thermal efficiency of the cycle.
    ANSWER: (A) -238.5 kJ/kg, (B) 6.51, (C) 449.4 kJ/kg, (D) -189.0 kJ/kg, (E) 291.6 kPa, (F) 52.74%.
30. At the beginning of the compression process of an air-standard Otto cycle, p=100 kPa, T=290 K and V=0.04 m^3. The maximum temperature in the cycle is 2200 K and the compression ratio is 8. Determine (A) the heat addition, (B) the net work, (C) the thermal efficiency, and (D) the MEP.
    ANSWER: (a) 52.89 kJ, (b) 29.87 kJ, (c) 56.47%, (d) 853.3 kPa.
31. An Otto engine operates with a compression ratio of 8.5. The following information is known:
    Temperature prior to the compression process: 70^oF.
    Volume prior to the compression process: 0.05 ft^3
    Pressure prior to the compression process: 14.7 psia.
    Heat added during the combustion process: 345 Btu/lbm.

Determine: (A) the mass of air in the cylinder, (B) the temperature and pressure at each process endpoint, (C) the compression work and expansion work in Btu/lbm, and (d) the thermal efficiency.
ANSWER: (A) 0.0038 lbm, (B) 787.1EF and 294.1 psia, 2802EF and 769.5 psia, and 926.2EF and 38.46 psia, (C) -122.8 Btu/lbm and 321.2 Btu/lbm, (D) 57.52%.

32. The compression ratio in an Otto cycle is 8. If the air before compression (state 1) is at 80EF and 14.7 psia and 800 Btu/lbm is added to the cycle and the mass of air contained in the cylinder is 0.02 lbm, Find the heat added, heat removed, work added, work produced, net work produced, MEP and efficiency of the cycle.
ANSWER: heat added=16 Btu, heat removed=-6.96 Btu, work added=-2.4 Btu, work produced=11.43 Btu, net work produced=9.04 Btu, MEP=205.4 psia, and efficiency of the cycle=56.47%.
33. The compression ratio in an Otto cycle is 10. If the air before compression (state 1) is at 60EF and 14.7 psia and 800 Btu/lbm is added to the cycle and the mass of air contained in the cylinder is 0.02 lbm, Find the heat added, heat removed, work added, work produced, net work produced, MEP and efficiency of the cycle.
ANSWER: heat added=16 Btu, heat removed=-6.37 Btu, work added=-2.69 Btu, work produced=12.32 Btu, net work produced=9.63 Btu, MEP=221.0 psia, and efficiency of the cycle=60.19%.
34. The compression ratio in an Otto cycle is 16. If the air before compression (state 1) is at 60EF and 14.7 psia and 800 Btu/lbm is added to the cycle and the mass of air contained in the cylinder is 0.02 lbm, Find the heat added, heat removed, work added, work produced, net work produced, MEP and efficiency of the cycle.
ANSWER: heat added=16 Btu, heat removed=-5.28 Btu, work added=-3.61 Btu, work produced=14.34 Btu, net work produced=10.72 Btu, MEP=236.2 psia, and efficiency of the cycle=67.01%.
35. An Otto engine with a turbo-charger operates with a compression ratio of 8.5. The following information is known:
Temperature prior to the turbo-charging compression process: 70°F.
Pressure prior to the turbo-charging compression process: 14.7 psia.
Pressure after the turbo-charging compression process: 20 psia.
Heat added during the combustion process: 345 Btu/lbm.
Volume after the compression process: 0.05 ft^3
Determine: (A) the mass of air in the cylinder, (B) the temperature and pressure at each process endpoint, (C) the compression work and expansion work in Btu/lbm, and (D) the thermal efficiency.
ANSWER: (A) 0.0033 lbm, (B) 118.7EF and 20.0 psia, 804.4EF and 308.7 psia, 2820EF and 800.9 psia, and 914.4EF and 38.14 psia, (C) -125.7 Btu/lbm and 362.2 Btu/lbm, (D) 58.10%.
36. An ideal Otto Cycle with a turbo-charger using air as the working fluid has a compression ratio of 9. The volume of the cylinder is 0.01 m^3. At the beginning of the turbo-charging compression process, the air is at 290 K and 90 kPa. The air pressure is 150 kPa after the turbo-charging compression process. The peak temperature in the cycle is 1800 K. determine: (A) the pressure and temperature at the end of the expansion process (power stroke), (B) the heat per unit mass added in

kJ/kg during the combustion process, (C) net work, (D) thermal efficiency of the cycle, and (E) mean effective pressure in kPa.
ANSWER: (A) 200.5 kPa, 645.9 K, (B) 710.9 kJ/kg, (C) 7.11 kJ/kg, (D) 64.11%, (E) 534.6 kPa.

37. A gasoline engine has a volumetric compression ratio of 9. The state before compression is 290 K, 90 kPa, and the peak cycle temperature is 1800 K. Find the pressure after expansion, work input, work output, net work output, heat input, thermal efficiency, and mean effective pressure of the cycle.
ANSWER: 1951 kPa, -292.7 kJ/kg, 754.4 kJ/kg, 461.7 kJ/kg, 789.6 kJ/kg, 58.48%, 562.3 kPa.
38. A gasoline engine has a volumetric compression ratio of 12. The state before compression is 290 K, 100 kPa, and the peak cycle temperature is 1800 K. Find the pressure after expansion, work input, work output, net work output, heat input, thermal efficiency, and mean effective pressure of the cycle.
ANSWER: 3242 kPa, -353.7 kJ/kg, 812.6 kJ/kg, 458.9 kJ/kg, 728.5 kJ/kg, 62.99%, 602.1 kPa.
39. A gasoline engine has a volumetric compression ratio of 8 and before compression has air at 280 K and 85 kPa. The combustion generates a peak pressure of 6500 kPa. Find the peak temperature, work input, work output, net work output, heat input, thermal efficiency, and mean effective pressure of the cycle.
ANSWER: 2676 K, -260.4 kJ/kg, 1083 kJ/kg, 822.9 kJ/kg, 1457 kJ/kg, 56.47%, 995.9 kPa.
40. A gasoline engine has a compression ratio of 10:1 with 4 cylinders of total displacement 2.3 L. The inlet state is 280 K and 70 kPa. The fuel adds 1800 kJ/kg of heat in the combustion process. Find the work input, work output, net work output, heat input, thermal efficiency, and mean effective pressure of the cycle.
ANSWER: -0.6085 kJ, 2.78 kJ, 2.17 kJ, 3.61 kJ, 60.19%, 1050 kPa.
41. A gasoline engine has a compression ratio of 12:1 with 4 cylinders of total displacement 2.3 L. The inlet state is 280 K and 100 kPa. The fuel adds 1800 kJ/kg of heat in the combustion process. Find the work input, work output, net work output, heat input, thermal efficiency, and mean effective pressure of the cycle.
ANSWER: -0.9786 kJ, 4.23 kJ, 3.25 kJ, 5.16 kJ, 62.99%, 1541 kPa.

9.1A. WANKEL ENGINE

A spark-ignited internal combustion rotary engine is Wankel engine. In place of the reciprocating motion of the piston, the engine substitutes the rotary motion of an equilateral triangular curved shaped rotor inside a housing to compress and expand the working fluid. As the rotor within the stator (chamber), the volume between the rotor and the stator changes to compress the fuel-air mixture. Since the number of its moving components is less than that of a conventional reciprocating piston engine, the Wankel engine is expected to be more efficient than a conventional reciprocating piston engine.

As shown in Figure 9.1.5, the rotor divides the housing into three volumes. Let us follow volume A as it passes through a cycle. The air-fuel mixture enters the engine in process 1-2 as shown in Figure 9.1.5. As the rotor turns, this volume is sealed off and compressed,

corresponding to the compression stroke 2-3. When the volume reaches a minimum (process 3-4, corresponding to TDC), the spark is fired and combustion takes lace. The hot gas then expands and turns the rotor in the power stroke, process 4-5. Finally, in process 5-2-1, the exhaust ports are uncovered to the volume, and the gas are exhausted from the engine. The p-V diagram is exactly the same as that of the Otto cycle.

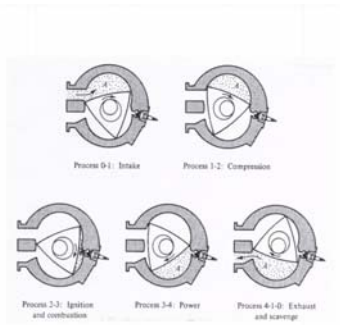

Figure 9.1.5. Wankel engine.

Note that there are three volumes of gas at various stages of the cycle at a given time. In other words, there are three power strokes per rotor revolution. The output shaft of the engine is geared to run at three times the rotor angular velocity, so that there is one power stroke for each output shaft revolution.

The Wankel engine has a high power to weight ratio, with few parts than that of a conventional Otto piston engine. For example, a six cylinder piston engine with twelve valves and accompanying hardware to control their motion can be replaced by a two rotor rotary engine with no valves. Further the high inertia force of the reciprocating piston and the accompanying noise and vibration are replaced by the smooth and quiet rotary motion of the engine. However, the rotary engine has relatively high emissions of unburned fuel. The problems of reducing emissions to meet standards as well as achieving a competitive fuel economy have prevented widespread use of the engine to date.

Homework 9.2. Wankel Cycle

1. Describe the four events of the Wankel engine.

2. Describe the operation of the Wankel engine.

3. Do you expect the Wankel engine to be more efficient than a conventional reciprocating piston engine? Why?

4. Describe the problems that the practical Wankel engine encountered.

9.2. DIESEL CYCLE

The Diesel cycle was proposed by Rudolf Diesel in the 1890s. The Diesel cycle as shown in Figure 9.2.1 is somewhat similar to the Otto cycle, except that ignition of the fuel-air

mixture is caused by spontaneous combustion owing to the high temperature that results from compressing the mixture to a very high pressure. The basic components of the Diesel cycle are the same as the Otto cycle, except that the spark plug is replaced by a fuel injector and the stroke of the piston is lengthened to provide a larger compression ratio.

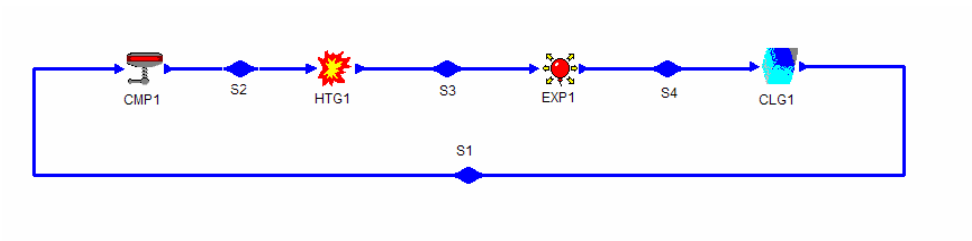

Figure 9.2.1. Diesel cycle.

The Diesel cycle consists of the following four processes:

1-2 isentropic compression
2-3 constant pressure heat addition
3-4 isentropic expansion
4-1 constant volume heat removing

Since the duration of the heat addition process is extended, this process is modeled by a constant pressure process. The p-v and T-s diagram for the Diesel cycle are illustrated in Figure 9.2.2.

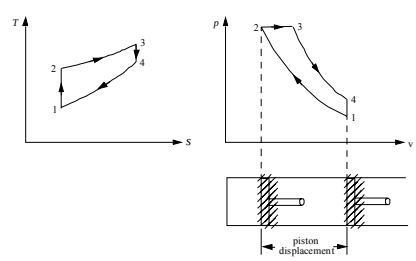

Figure 9.2.2. Diesel cycle p-v and T-s diagrams

Applying the First law and Second law of thermodynamics of the closed system to each of the four processes of the cycle yields:

$$W_{12} = IpdV \tag{9.2.1}$$

$$Q_{12} - W_{12} = m(u_2 - u_1),\ Q_{12} = 0, \tag{9.2.2}$$

$$W_{23} = IpdV = m(p_3v_3 - p_2v_2) \tag{9.2.3}$$

$$Q_{23} = m(u_3 - u_2) + W_{23} = m(h_3 - h_2) \tag{9.2.4}$$

$$W_{34} = IpdV \tag{9.2.5}$$

$$Q_{34} - W_{34} = m(u_4 - u_3),\ Q_{34} = 0 \tag{9.2.6}$$

$$W_{41} = IpdV = 0 \tag{9.2.7}$$

and

$$Q_{41} - 0 = m(u_1 - u_4). \tag{9.2.8}$$

The net work (W_{net}), which is also equal to net heat (Q_{net}), is

$$W_{net} = W_{12}+W_{23}+W_{34} = Q_{net} = Q_{23} + Q_{41} \tag{9.2.9}$$

The thermal efficiency of the cycle is

$$0 = W_{net} /Q_{23} =Q_{net} /Q_{23} = 1- Q_{41} /Q_{23} =1- (u_4 - u_1)/(h_3 - h_2) \tag{9.2.10}$$

This expression for thermal efficiency of an ideal Otto cycle can be simplified if air is assumed to be the working fluid with constant specific heats. Equation (9.2.10) is reduced to:

$$0 = 1- (T_4 - T_1)/[k(T_3 - T_2)] = 1-(r)^{1-k} \{[(r_c)^k -1]/[k(r_c -1)]\} \tag{9.2.11}$$

where r is the compression ratio, and r_c is the cut-off ratio for the engine defined by the equation

$$r = V_1 /V_2 \tag{9.2.12}$$

and

$$r_c = V_3 /V_2 \tag{9.2.13}$$

A comparison of the thermal efficiency of the Diesel cycle and the thermal efficiency of the Otto cycle shows that the two thermal cycle efficiencies differ by the quantity in the brackets of equation (9.2.11). This bracket factor is always larger than one, hence the Diesel cycle efficiency is always less than the Otto cycle efficiency operating at the same compression ratio.

Since the fuel is not injected into the cylinder until after the air has been completely compressed in the Diesel cycle, there is no engine knock problem. Therefore the Diesel

engine can be designed to operate at much higher compression ratios and less refined fuel than those of the Otto cycle. As a result of the higher compression ratio, Diesel engines are slightly more efficient than Otto engines.

Example 9.2.1

A Diesel engine receives air at 27EC and 100 kPa. The compression ratio is 18. The amount of heat addition is 500 kJ/kg. The mass of air contained in the cylinder is 0.0113 kg. Determine (a) the maximum cycle pressure and maximum cycle temperature, (b) the efficiency and work output, and (c) the MEP. Plot the sensitivity diagram of cycle efficiency vs compression ratio.

To solve this problem by CyclePad, we take the following steps:

1. Build
   (A) Take a compression device, a combustion chamber, an expander and a cooler from the closed system inventory shop and connect the four devices to form the Diesel cycle.
   (B) Switch to analysis mode.
2. Analysis
   (A) Assume a process for each of the four processes: (a) compression device as isentropic, (b) combustion as isobaric, (c) expander as isentropic, and (d) cooler as isochoric.
   (B) Input the given information: (a) working fluid is air, (b) the inlet pressure and temperature of the compression device are 100 kPa and 27EC, (c) the compression ratio of the compression device is 18, (d) the heat addition is 500 kJ/kg in the combustion chamber, and (e) the mass of air is 0.0113 kg.
3. Display results
   (A) Display cycle properties results. The cycle is a heat engine. The answers are T_{max}=1179 EC, p_{max}=5720 kPa, 0=65.53% , MEP=403.2 kPa and Wnet=4.26 kJ, and
   (B) Display the sensitivity diagram of cycle efficiency vs compression ratio.

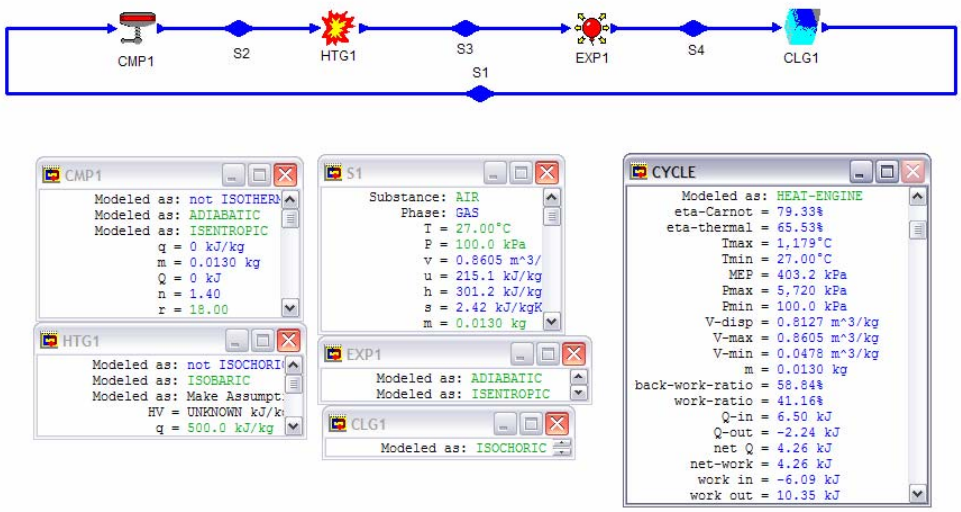

Figure E9.2.1a. Diesel cycle.

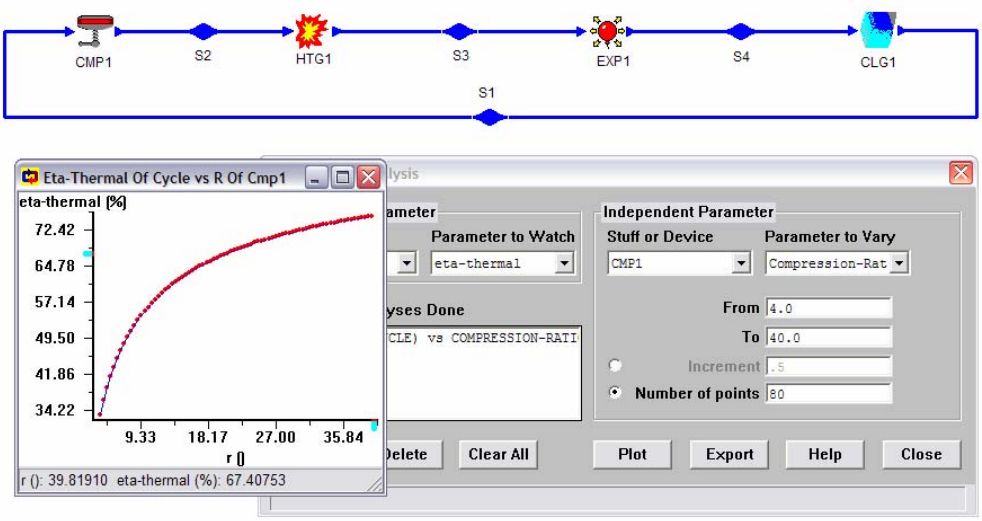

Figure E9.2.1b. Diesel cycle sensitivity analysis.

Comment: Efficiency increases as compression ratio increases.

Example 9.2.2

A Diesel engine receives air at 60EF and 14.7 psia. The compression ratio is 16. The amount of heat addition is 800 Btu/lbm. The mass of air contained in the cylinder is 0.02 lbm.

Determine the maximum cycle temperature, heat added, heat removed, work added, work produced, net work produced, MEP and efficiency of the cycle.

To solve this problem by CyclePad, we take the following steps:

1. Build
   (A) Take a compression device, a combustion chamber, an expander and a cooler from the closed system inventory shop and connect the four devices to form the Diesel cycle.
   (B) Switch to analysis mode.
2. Analysis
   (A) Assume a process for each of the four processes: (a) compression device as isentropic, (b) combustion as isobaric, (c) expander as isentropic, and (d) cooler as isochoric.
   (B) Input the given information: (a) working fluid is air, (b) the inlet temperature and pressure of the compression device are 60EF and 14.7 psia, (c) the compression ratio of the compression device is 16, (d) the heat addition is 800 Btu/lbm in the combustion chamber, and (e) the mass of air is 0.02 lbm.
3. Display results
   (A) Display cycle properties results. The cycle is a heat engine. The answers are T_{max}=4454EF, Q_{add}=16 Btu,Q_{remove}=-6.97 Btu, W_{add}=-3.61 Btu, $W_{expansion}$=12.65 Btu, Wnet=9.03 Btu, MEP=199 psia, and 0=56.45%.

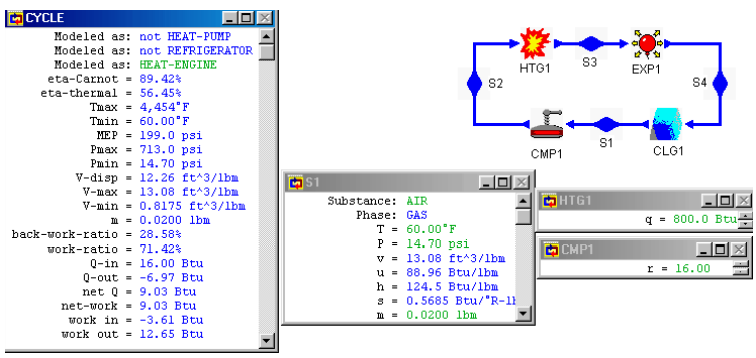

Figure E9.2.2. Diesel cycle.

The power output of the Diesel cycle can be increased by super-charging, turbo-charging and pre-cooling the air before it enters the cylinder in the Diesl engine. The difference between a super-charger and a turbo-charger is the manner in which they are powered. Since the inlet air density is increased due to higher inlet air pressure or lower air temperature, the mass of air in the cylinder is increased. Turbo-charging raises the inlet air pressure of the engine above atmospheric pressure and raise the power output of the engine, but it may not improve the efficiency of the cycle. The schematic diagram of the Diesel cycle with turbo-charging or super-charging is illustrated in Figure 9.2.3. The bottom schematic diagram of Figure 9.2.4 illustrates the Diesel cycle with turbo-charging and pre-cooling. The following three examples (Example 9.2.2, Example 9.2.3, and Example 9.2.4) show the power increase due to super-charging, and pre-cooling and super-charging.

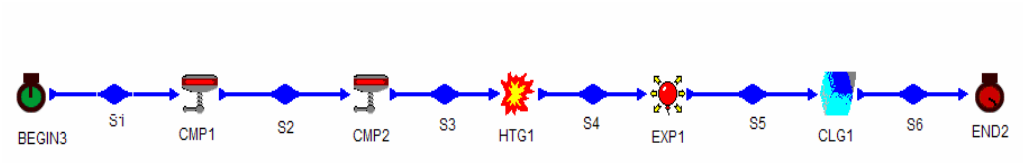

Figure 9.2.3. Diesel cycle with super-charging.

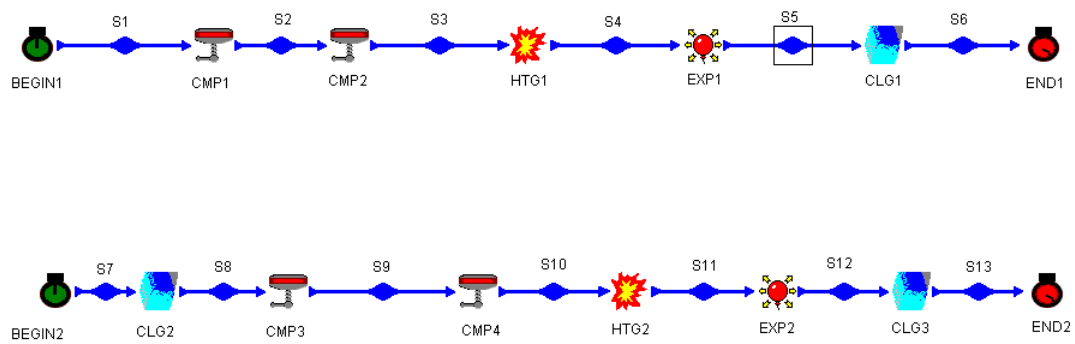

Figure 9.2.4. Diesel cycle with super-charging and pre-cooling.

Example 9.2.3

Find the pressure and temperature of each state of an ideal Diesel cycle with a compression ratio of 15 and a cut-off ratio of 2. The cylinder volume before compression is 0.16 ft^3. The atmosphere conditions are 14.7 psia and 70EF. Also determine the mass of air in the cylinder, heat supplied, net work produced, MEP, and cycle efficiency.

To solve this problem, we build the cycle as shown in Figure 9.2.4. Then (A) Assume isobaric for the pre-cooling process 7-8, isentropic for compression process 8-9, isentropic for compression process 9-10, isobaric for the heating process 10-11, isentropic for expansion process 11-12, and isochoric for the cooling process 12-13; (B) input p_7=14.7 psia, T_7=70EF; p_{13}=14.7 psia, T_{13}=70EF; p_8=14.7 psia, T_8=70EF; p_9=14.7 psia, V_9=0.16 ft^3 (no turbo-charger and no pre-cooler); compression ratio=15, and cut-off ratio=2; and (C) display results. The results are: T_8=70EF, T_9=96.87EF, T_{10}=1105EF, T_{11}=2670EF, T_{12}=938.1EF, Q_{in}=4.5 Btu, W_{net}=2.72 Btu, MEP=98.31 psia, 0=60.37%, and m=0.012 lbm.

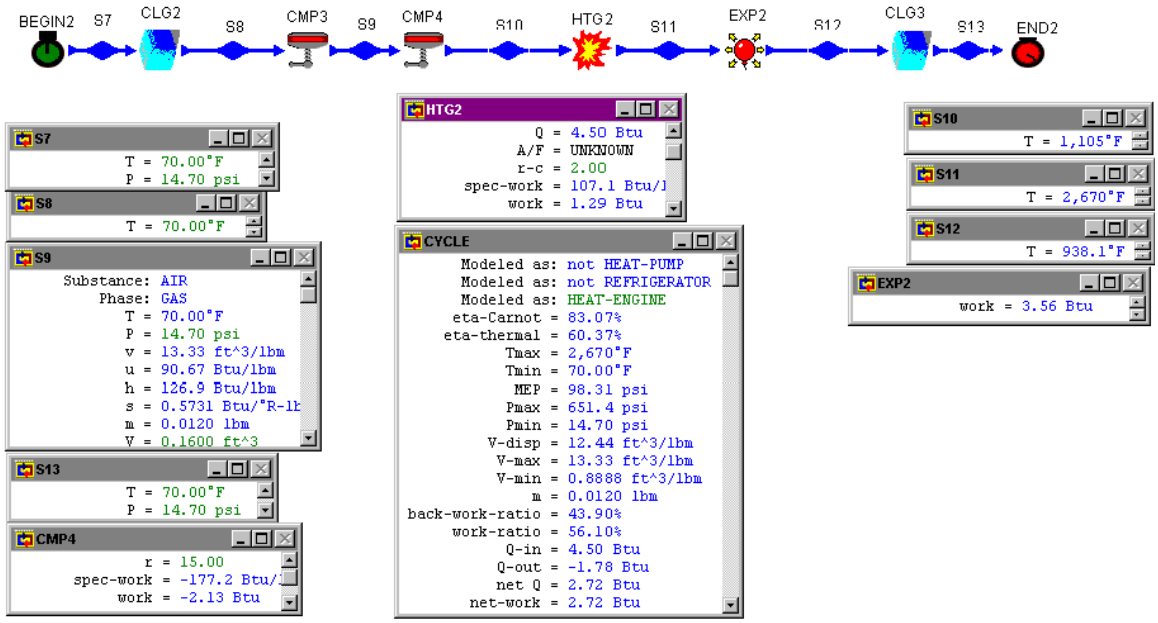

Figure E9.2.3. Diesel cycle without pre-cooler and without turbo-charger.

Example 9.2.4

Find the pressure and temperature of each state of an ideal Diesel cycle with a compression ratio of 15 and a cut-off ratio of 2, and a super-charger which compresses fresh air to 20 psia before it enters the cylinder of the engine. The cylinder volume before compression is 0.16 ft^3. The atmosphere conditions are 14.7 psia and 70EF. Also determine the mass of air in the cylinder, heat supplied, net work produced, MEP, and cycle efficiency.

To solve this problem, we build the cycle as shown in Figure 9.2.4. Then (A) Assume isobaric for the pre-cooling process 7-8, isentropic for compression process 8-9, isentropic for compression process 9-10, isobaric for the heating process 10-11, isentropic for expansion process 11-12, and isochoric for the cooling process 12-13; (B) input p_7=14.7 psia, T_7=70EF; p_{13}=14.7 psia, T_{13}=70EF; T_8=70EF; p_9=20 psia, V_9=0.16 ft^3 (with turbo-charger and no pre-cooler); compression ratio=15, and cut-off ratio=2; and (C) display results. The results are: T_8=70EF, T_9=96.87EF, T_{10}=1249EF, T_{11}=2958EF, T_{12}=938.1EF, Q_{in}=6.12 Btu, W_{net}=3.90 Btu, MEP=106.5 psia, 0=64.51%, and m=0.015 lbm.

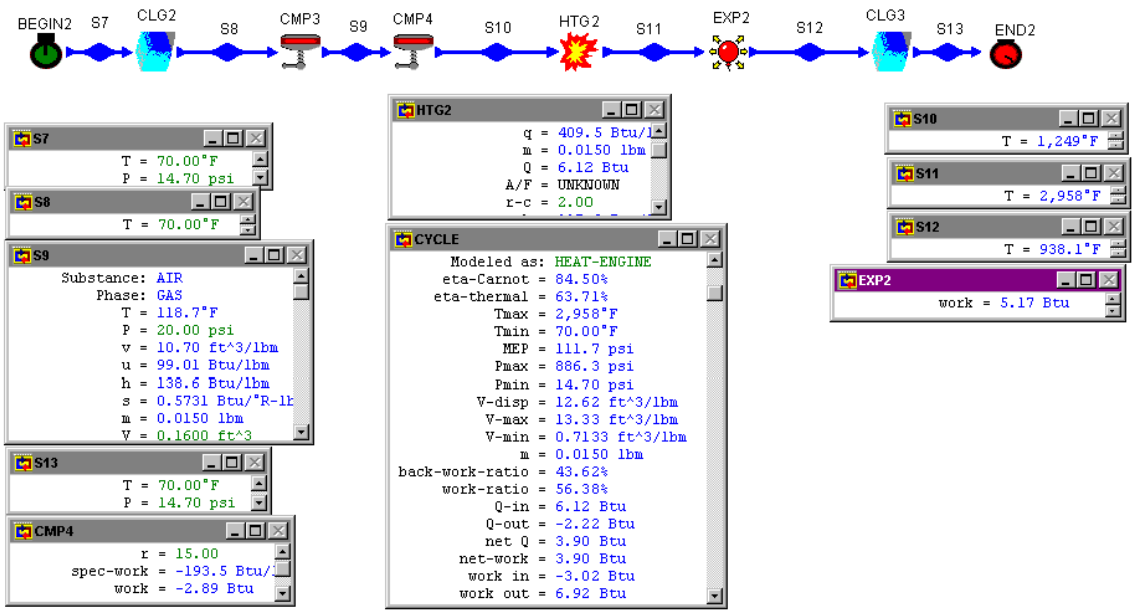

Figure E9.2.4. Diesel cycle with turbo-charger.

Example 9.2.5.

Find the pressure and temperature of each state of an ideal Diesel cycle with a compression ratio of 15 and a cut-off ratio of 2. A pre-cooler which cools the atmospheric air from 70EF to 50EF, and a super-charger which compresses fresh air to 20 psia before it enters the cylinder of the engine are added to the engine. The cylinder volume before compression is 0.16 ft^3. The atmosphere conditions are 14.7 psia and 70EF. Also determine the mass of air in the cylinder, heat supplied, net work produced, MEP, and cycle efficiency.

To solve this problem, we build the cycle as shown in Figure 9.2.5. Then (A) Assume isobaric for the pre-cooling process 7-8, isentropic for compression process 8-9, isentropic for compression process 9-10, isobaric for the heating process 10-11, isentropic for expansion process 11-12, and isochoric for the cooling process 12-13; (B) input p_7=14.7 psia, T_7=70EF; p_8=14.7 psia, p_{13}=14.7 psia, T_{13}=70EF; T_8=50EF; p_9=20 psia, V_9=0.16 ft^3 (with turbo-charger and pre-cooler); compression ratio=15, and cut-off ratio=2; and (C) display results. The results are: T_8=50EF, p_8 =14.7 psia, T_9=96.87EF, p_9=20 psia, T_{10}=1184EF, p_{10}=886.3 psia, T_{11}=2829EF, p_{11}=886.3 psia, T_{12}=864.8EF,p_{12}=36.76 psia; Q_{78}=-0.0745 Btu, W_{89}=-0.1247 Btu, W_{910}=-2.89 Btu, W_{1011}=1.75 Btu, Q_{1011}=6.12 Btu, W_{1112}=5.2 Btu,W_{net}=3.93 Btu, MEP=108.2 psia, 0=64.25%, and m=0.0155 lbm.

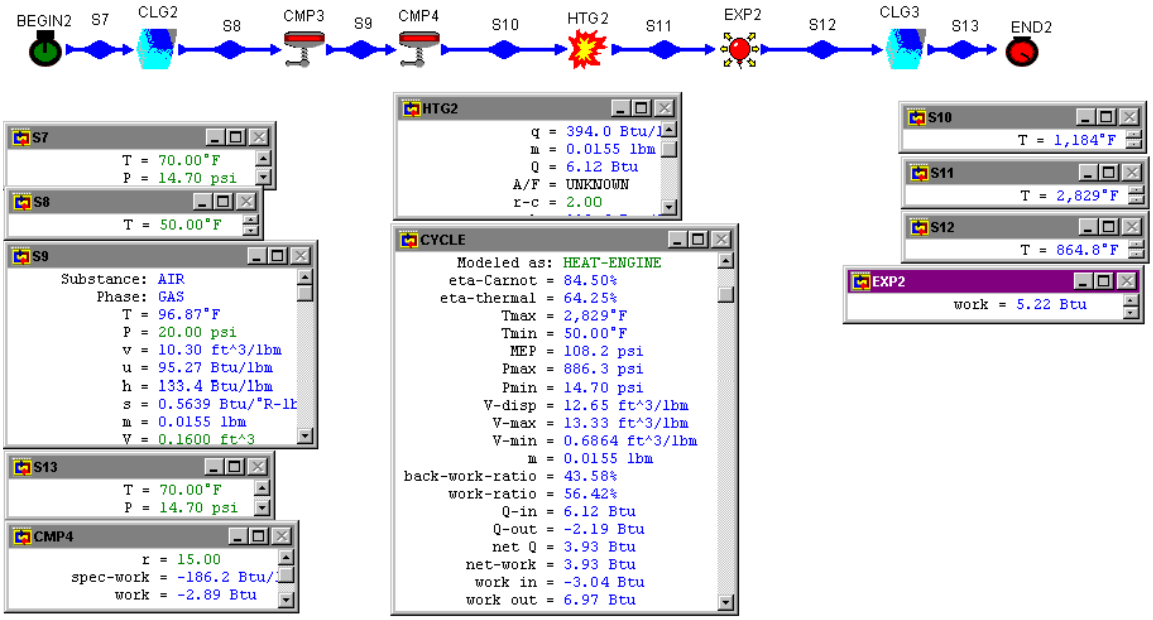

Figure E9.2.5. Diesel cycle with pre-cooler and turbo-charger.

Homework 9.2. Diesel Cycle Analysis and Optimization.

1. What is the difference between the compression ratio and cut-off ratio?
2. What is the difference between the Otto and Diesel engine?
3. How is the fuel introduced into the Diesel engine?
4. Does the Diesel engine have sparkling plugs? If yes, for what reason?
5. Does the Diesel engine have engine knock or detonation problem? Why?
6. Is the Otto cycle more efficient than a Diesel cycle with the same compression ratio?
7. How is it possible for a Diesel engine to operate at efficiencies greater than the efficiency of an Otto cycle?
8. Why is the Diesel engine usually used for big trucks and the Otto engine usually used for compact cars?
9. Can the Diesel engine afford to have a large compression ratio? Why?
10. How does the modern Diesel engine achieve higher power output without the use of higher compression ratio?
11. Suppose a large amount of power is required. Which engine would you choose between Otto and Diesel? Why?
12. In an ideal Diesel cycle, indicate whether the following statements are true or false:
    All the processes are internally reversible.
    Cycle efficiency increases with the maximum temperature.
    Cycle efficiency depends on the compression ratio only.
13. Sketch T-s and p-v diagrams for the Diesel cycle.

14. For a Diesel cycle, plot the cycle efficiency as a function of compression ratio from 4 to 30.
15. For a Diesel cycle, plot the MEP as a function of compression ratio from 4 to 30.
16. The compression ratio of an air-standard Diesel cycle is 15. At the beginning of the compression stroke, the pressure is 14.7 psia and the temperature is 80EF. The maximum temperature of the cycle is 4040EF. Find (A) the temperature at the end of the compression stroke, (B) the temperature at the beginning of the exhaust process, (C) the heat addition to the cycle, (D) the net work produced by the cycle, (E) the thermal efficiency, and (F) the MEP of the cycle.
    ANSWER: (A) 1135EF, (B) 1847EF, (C) 1535 Btu/lbm, (D) 868.2 Btu/lbm, (E) 56.56%, (F) 167.8 psia.
17. An ideal Diesel cycle with a compression ratio of 17 and a cutoff ratio of 2 has an air temperature of 105EF and a pressure of 15 psia at the beginning of the isentropic compression process. Determine (A) the temperature and pressure of the air at the end of the isentropic compression process, (B)the temperature and pressure of the air at the end of the combustion process, and (C) the thermal efficiency of the cycle.
    ANSWER: (A) 1294EF and 792.0 psia, (B) 3048EF and 792.0 psia, (C) 62.31%.
18. An ideal Diesel cycle with a compression ratio of 20 and a cutoff ratio of 2 has a temperature of 105EF and a pressure of 15 psia at the beginning of the compression process. Determine (A) the temperature and pressure of the gas at the end of the compression process, (B) the temperature and pressure of the gas at the end of the combustion process, (C) heat added to the engine in the combustion chamber, (D) heat removed from the engine to the environment, and (E) thermal cycle efficiency.
    ANSWER: (A) 1412EF and 994.3 psia, (B) 3283EF and 994.3 psia, (C) 448.5 Btu/lbm, (D) -158.4 Btu/lbm, (E) 64.48%.
19. The pressure and temperature at the start of compression in an air Diesel cycle are 101 kPa and 300 K. The compression ratio is 15. The amount of heat addition is 2000 kJ/kg of air. Determine (A) the maximum cycle pressure and maximum temperature of the cycle, and (B) the cycle thermal efficiency.
    ANSWER: (A) 2879 K and 4476 kPa, (B) 54.79%.
20. An ideal Diesel engine receives air at 103.4 kPa and 27EC. Heat added to the air is 1016.6 kJ/kg, and the compression ratio of the engine is 13. Determine (A) the work added during the compression process, (B) the cut-off ratio, (C) the work done during the expansion process, (D) the heat removed from the air during the cooling process, (E) the MEP (mean effective pressure), and (F) the thermal efficiency of the cycle.
    ANSWER: (A) -385 kJ/kg, (B) 2.21, (C) 673.5 kJ/kg, (D) -437.7 kJ/kg, (E) 735.6 kPa, (F) 56.94%.
21. An ideal Diesel engine receives air at 15 psia and 65EF. Heat added to the air is 160 Btu/lbm, and the compression ratio of the engine is 6. Determine (A) the work added during the compression process, (B) the cut-off ratio, (C) the work done during the expansion process, (D) the heat removed from the air during the cooling process, (E) the MEP (mean effective pressure), and (F) the thermal efficiency of the cycle.
    ANSWER: (A) -94.10 Btu/lbm, (B) 1.62, (C) 167.2 Btu/lbm, (D) -86.87 Btu/lbm, (E) 36.64 psia, (F) 45.71%.

22. An ideal Diesel engine receives air at 100 kPa and 25EC. The maximum cycle temperature is 1460EC and the compression ratio of the engine is 16. Determine (A) the work done during the compression process, (B) the heat added to the air during the heating process, (C) the work done during the expansion process, (D) the heat removed from the air during the cooling process, and (E) the thermal efficiency of the cycle.
    ANSWER: (A) -434.1 kJ/kg, (B) 832.2 kJ/kg, (C) 710.5 kJ/kg, (D) -318.0 kJ/kg, (E) 61.79%.
23. A Diesel engine receives air at 60EF and 14.7 psia. The compression ratio is 20. The amount of heat addition is 800 Btu/lbm. The mass of air contained in the cylinder is 0.02 lbm. Determine the maximum cycle temperature, heat added, heat removed, work added, work produced, net work produced, MEP and efficiency of the cycle.
    ANSWER: T_{max}=4601EF, Q_{add}=16 Btu,Q_{remove}=-6.27 Btu, W_{add}=-4.12 Btu, $W_{expansion}$=13.85 Btu, Wnet=9.73 Btu, MEP=211.7 psia, and 0=60.84%.
24. A Diesel engine receives air at 80EF and 14.7 psia. The compression ratio is 20. The amount of heat addition is 800 Btu/lbm. The mass of air contained in the cylinder is 0.02 lbm. Determine the maximum cycle temperature, heat added, heat removed, work added, work produced, net work produced, MEP and efficiency of the cycle.
    ANSWER: T_{max}=4667EF, Q_{add}=16 Btu,Q_{remove}=-6.22 Btu, W_{add}=-4.28 Btu, $W_{expansion}$=14.05 Btu, Wnet=9.78 Btu, MEP=204.7 psia, and 0=61.11%.
25. An ideal Diesel engine receives air at 15 psia, 70EF. The air volume is 7 ft^3 before compression. Heat added to the air is 200 Btu/lbm, and the compression ratio of the engine is 11. Determine (A) the work added during the compression process, (B) the maximum temperature of the cycle, (C) the work done during the expansion process, (D) the heat removed from the air during the cooling process, (E) the MEP (mean effective pressure), and (F) the thermal efficiency of the cycle.
    ANSWER: (A) -78.19 Btu/lbm, (B) 1757EF, (C) 139.8 Btu/lbm, (D) -45.53 Btu/lbm, (E) 52.32 psia, (F) 57.51%.
26. A Diesel cycle has a compression ratio of 18. Air intake conditions (prior to compression) are 72EF and 14.7 psia, and the highest temperature in the cycle is limited to 2500EF to avoid damaging the engine block. Calculate: (A) thermal efficiency, (B) net work, and (C) mean effective pressure. Compare engine efficiency to that of a Carnot cycle engine operating between the same temperatures.
    ANSWER: (A) 64.35%, (B) 195.9 Btu/lbm, (C) 83.76 psia; 82.04%.
27. A Diesel engine is modeled with an ideal Diesel cycle with a compression ratio of 17. The following information is known:
    Temperature prior to the compression process: 70^oF.
    Pressure prior to the compression process: 14.7 psia.
    Heat added during the combustion process: 245 Btu/lbm.
    (A) Determine the temperature and pressure at each process endpoint.
    (B) Solve for the net cycle work (Btu/lbm).
    (C) Solve for the thermal efficiency.
    ANSWER: (A) 1185EF and 776.2 psia, 2208EF and 776.2 psia, 582.3EF and 28.92 psia, (B) 157.3 Btu/lbm, (C) 64.2%.

28. An ideal Diesel cycle with a compression ratio of 17 and a cutoff ratio of 2 has a temperature of 313 K and a pressure of 100 kPa at the beginning of the isentropic compression process. Use the cold air-standard assumptions, assume that k=1.4, determine (A) the temperature and pressure of the air at the end of the isentropic compression process and at the end of the combustion process, and (B) the thermal efficiency of the cycle.
    ANSWER: (A) 972.1 K and 5280 kPa, 1944 K and 5280 kPa, (B) 62.31%.
29. Find the pressure and temperature of each state of an ideal Diesel cycle with a compression ratio of 15 and a cut-off ratio of 2. A pre-cooler which cools the atmospheric air from 80EF to 50EF, and a super-charger which compresses fresh air to 20 psia before it enters the cylinder of the engine are added to the engine. The cylinder volume before compression is 0.1 ft^3. The atmosphere conditions are 14.7 psia and 80EF. Also determine the mass of air in the cylinder, heat supplied, net work produced, MEP, and cycle efficiency.
    ANSWER: [50EF and 14.7 psia, 98.67EF and 20 psia, 1184EF and 886.3 psia, 2829EF and 886.3 psia, and 854.9EF and 35.81 psia], m=0.0097 lbm, Q=3.83 Btu, Wnet=2.47 Btu, MEP=106.5 psia, 0=64.51%.
30. Find the pressure and temperature of each state of an ideal Diesel cycle with a compression ratio of 15 and a cut-off ratio of 2. A pre-cooler which cools the atmospheric air from 80EF to 50EF, and a super-charger which compresses fresh air to 25 psia before it enters the cylinder of the engine are added to the engine. The cylinder volume before compression is 0.1 ft^3. The atmosphere conditions are 14.7 psia and 80EF. Also determine the mass of air in the cylinder, heat supplied, net work produced, MEP, and cycle efficiency.
    ANSWER: [50EF and 14.7 psia, 133.5EF and 25 psia, 1293EF and 1108 psia, 3045EF and 1108 psia, and 854.9EF and 35.81 psia], m=0.0114 lbm, Q=4.78 Btu, Wnet=3.19 Btu, MEP=116.4 psia, 0=66.7%.
31. A diesel engine has a state before compression of 95 kPa, 290 K, a peak pressure of 6000 kPa, and a maximum temperature of 2400 K. Find the work input, work output, net work output, heat input, thermal efficiency, and mean effective pressure of the cycle.
    ANSWER: -471.6 kJ/kg, 1373 kJ/kg, 901.8 kJ/kg, 1457 kJ/kg, 61.90%, 1087 kPa.
32. A diesel engine has a state before compression of 100 kPa, 290 K, a peak pressure of 5000 kPa, and a maximum temperature of 2400 K. Find the work input, work output, net work output, heat input, thermal efficiency, and mean effective pressure of the cycle.
    ANSWER: -427.7 kJ/kg, 1316 kJ/kg, 888.5 kJ/kg, 1518 kJ/kg, 58.52%, 1138 kPa.
33. At the beginning of compression in a Diesel cycle T=300 K and p=200 kPa; after combustion is complete T=1500 K and p=7 Mpa. Find the work input, work output, net work output, heat input, thermal efficiency, and mean effective pressure of the cycle.
    ANSWER: -390.6 kJ/kg, 782.7 kJ/kg, 392.1 kJ/kg, 657.3 kJ/kg, 59.65%, 985.8 kPa.
34. At the beginning of compression in a Diesel cycle T=300 K and p=100 kPa; after combustion is complete T=1500 K and p=5 Mpa. Find the work input, work output,

net work output, heat input, thermal efficiency, and mean effective pressure of the cycle.
ANSWER: -442.5 kJ/kg, 814.1 kJ/kg, 371.6 kJ/kg, 584.6 kJ/kg, 63.57%, 460.3 kPa.

9.3. ATKINSON CYCLE

A cycle called Atkinson cycle is similar to the Otto cycle except that the isochoric exhaust and intake process at the end of the Otto cycle power stroke is replaced by an isobaric process. The schematic diagram of the cycle is shown in Figure 9.3.1. The cycle is made of the following four processes:

1-2 isentropic compression
2-3 isochoric heat addition
3-4 isentropic expansion
4-1 isobaric heat removing

Applying the First law and Second law of thermodynamics of the closed system to each of the four processes of the cycle yields:

$$W_{12} = IpdV \tag{9.3.1}$$

$$Q_{12} - W_{12} = m(u_2 - u_1),\ Q_{12}=0 \tag{9.3.2}$$

$$W_{23} = IpdV = 0 \tag{9.3.3}$$

$$Q_{23} - 0 = m(u_3 - u_2) \tag{9.3.4}$$

$$W_{34} = IpdV \tag{9.3.5}$$

$$Q_{34} - W_{34} = m(u_4 - u_3),\ Q_{34} =0 \tag{9.3.6}$$

$$W_{41} = IpdV = p\ m(v_1 - v_4) \tag{9.3.7}$$

and

$$Q_{41} - W_{41} = m(u_1 - u_4) \tag{9.3.8}$$

The net work (W_{net}), which is also equal to net heat (Q_{net}), is

$$W_{net} =W_{12} +W_{34} +W_{41} = Q_{net} = Q_{23} + Q_{41} \tag{9.3.9}$$

The thermal efficiency of the cycle is

$$0 = W_{net} /Q_{23} =Q_{net} /Q_{23} = 1- Q_{41} /Q_{23} =1- (h_4 - h_1)/(u_3 - u_2) \tag{9.3.10}$$

This expression for thermal efficiency of the cycle can be simplified if air is assumed to be the working fluid with constant specific heats. Equation (9.3.10) is reduced to:

$$0 = 1- k(T_4 - T_1)/(T_3 - T_2) \tag{9.3.11}$$

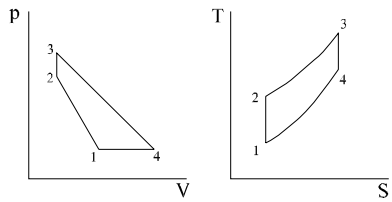

Figure 9.3.1. Atkinson cycle.

Example 9.3.1

Find the pressure and temperature of each state of an ideal Atkinson cycle with a compression ratio of 8. The heat addition in the combustion chamber is 800 Btu/lbm. The atmospheric air is at 14.7 psia and 60EF. The cylinder contains 0.02 lbm of air. Determine the maximum temperature, maximum pressure, heat supplied, heat removed, work added during the compression processes, work produced during the expansion process, net work produced, MEP, and cycle efficiency. Draw the T-s diagram of the cycle.

To solve this problem, we build the cycle as shown in Figure E9.3.1. Then (A) Assume isentropic for the compression process 1-2 and the expansion process 3-4, isochoric for the heating process 2-3, and isobaric for the cooling process 4-1; (B) input p_1=14.7 psia, T_1=60EF, mdot=0.02 lbm; r=8 for the compression process 1-2, and q=800 Btu/lbm for the heating process 2-3. and (C) display results. The results are: T_{max}=5407EF, p_{max}=1328 psia, Q_{add}=16 Btu, Q_{remove}=-5.28 Btu, W_{comp}=-3.82 Btu, W_{expan}=14.54 Btu, W_{net}=10.72 Btu, MEP=74.00 psia, and 0=67.02%.

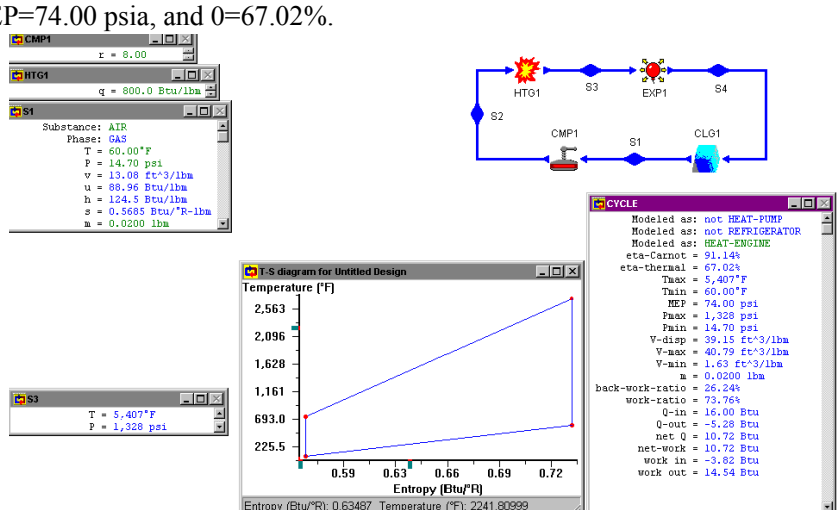

Figure E9.3.1. Atkinson cycle.

Homework 9.3. Atkinson Cycle

1. What are the four processes of the Atkinson cycle?
2. What is the difference between the Otto cycle and the Atkinson cycle?
3. Find the pressure and temperature of each state of an ideal Atkinson cycle with a compression ratio of 16. The heat addition in the combustion chamber is 800 Btu/lbm. The atmospheric air is at 14.7 psia and 60EF. The cylinder contains 0.02 lbm of air. Determine the maximum temperature, maximum pressure, heat supplied, heat removed, work added during the compression processes, work produced during the expansion process, net work produced, MEP, and cycle efficiency.
   ANSWER: T_{max}=5789EF, p_{max}=2828 psia, Q_{add}=16 Btu, Q_{remove}=-4.17 Btu, W_{comp}=-4.81 Btu, W_{expan}=16.63 Btu, W_{net}=11.83 Btu, MEP=73.91 psia, and 0=73.91%.
4. Find the pressure and temperature of each state of an ideal Atkinson cycle with a compression ratio of 16. The heat addition in the combustion chamber is 800 Btu/lbm. The atmospheric air is at 101.4 kPa and 18EC. The cylinder contains 0.01 kg of air. Determine the maximum temperature, maximum pressure, heat supplied, heat removed, work added during the compression processes, work produced during the expansion process, net work produced, MEP, and cycle efficiency.
   ANSWER: T_{max}=3121EC, p_{max}=18904 kPa , Q_{add}=18 kJ, Q_{remove}=-4.72 kJ, W_{comp}=-5.59 kJ, W_{expan}=18.86 kJ, W_{net}=13.28 kJ, MEP=631 kPa, and 0=73.75%.
5. Find the pressure and temperature of each state of an ideal Atkinson cycle with a compression ratio of 10. The heat addition in the combustion chamber is 800 Btu/lbm. The atmospheric air is at 101.4 kPa and 18EC. The cylinder contains 0.01 kg of air. Determine the maximum temperature, maximum pressure, heat supplied, heat removed, work added during the compression processes, work produced during the expansion process, net work produced, MEP, and cycle efficiency.
   ANSWER: T_{max}=2970EC, p_{max}=11289 kPa , Q_{add}=18 kJ, Q_{remove}=-5.54 kJ, W_{comp}=-4.74 kJ, W_{expan}=17.20 kJ, W_{net}=12.46 kJ, MEP=540.7 kPa, and 0=69.21%.
6. An Atkinson cycle has a compression ratio of 10 and a top temperature in the cycle of 1400 K. The ambient temperature is 300 K.
   (A) What is the cycle efficiency?
   (B) What is the net work per unit of mass of this cycle?
   (C) Compare these values with those for an Otto cycle given the same conditions.

9.4. DUAL CYCLE

Combustion in the Otto cycle is based on a constant volume process; in the Diesel cycle, it is based on a constant pressure process. But combustion in actual spark-ignition engine requires a finite amount of time if the process is to be completed. For this reason, combustion in Otto cycle does not actually occur under the constant volume condition. Similarly, in

compression-ignition engines, combustion in Diesel cycle does not actually occur under the constant pressure condition, because of the rapid and uncontrolled combustion process.

The operation of the reciprocating internal combustion engines represents a compromise between the Otto and the Diesel cycle, and can be described as a Dual combustion cycle. Heat transfer to the system may be considered to occur first at constant volume and then at constant pressure. Such a cycle is called Dual cycle.

The Dual cycle as shown in Figure 9.4.1 is composed of the following five processes:

1-2	isentropic compression
2-3	constant volume heat addition
3-4	constant pressure heat addition
4-5	isentropic expansion
5-1	constant volume heat removing

Figure 9.4.2 shows the Dual cycle on p-v and T-s diagrams.

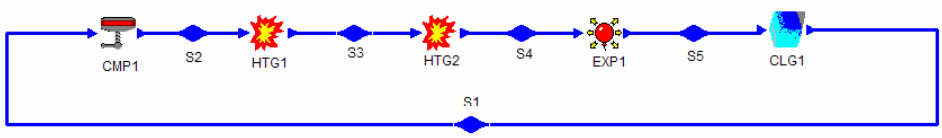

Figure 9.4.1. Dual cycle.

Applying the First law and Second law of thermodynamics of the closed system to each of the five processes of the cycle yields:

$$W_{12} = IpdV \tag{9.4.1}$$

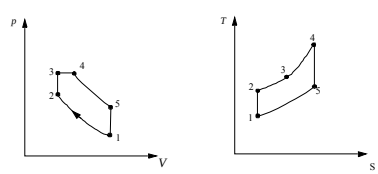

Figure 9.4.2. Dual cycle on p-v and T-s diagrams.

$$Q_{12} - W_{12} = m(u_2 - u_1),\ Q_{12} = 0, \tag{9.4.2}$$

$$W_{23} = IpdV = 0 \tag{9.4.3}$$

$$Q_{23} - 0 = m\,(u_3 - u_2) \tag{9.4.4}$$

$$W_{34} = IpdV = m(p_4v_4 - p_3v_3) \quad (9.4.5)$$

$$Q_{34} = m(u_4 - u_3) + W_{34} = m(h_4 - h_3) \quad (9.4.6)$$

$$W_{45} = IpdV \quad (9.4.7)$$

$$Q_{45} - W_{45} = m(u_5 - u_4),\ Q_{45} = 0, \quad (9.4.8)$$

$$W_{51} = IpdV = 0 \quad (9.4.9)$$

and

$$Q_{51} - W_{51} = m(u_1 - u_5) \quad (9.4.10)$$

The net work (W_{net}), which is also equal to net heat (Q_{net}), is

$$W_{net} = W_{12}+W_{34}+W_{45} = Q_{net} = Q_{23}+Q_{34}+Q_{51} \quad (9.4.11)$$

The thermal efficiency of the cycle is

$$0 = W_{net} /(Q_{23} + Q_{34}) = Q_{net} /(Q_{23} + Q_{34}) = 1-Q_{51} /(Q_{23} + Q_{34}) \quad (9.4.11)$$

This expression for thermal efficiency of an ideal Otto cycle can be simplified if air is assumed to be the working fluid with constant specific heats. Equation (9.4.11) is reduced to:

$$0 = 1- (T_5 - T_1)/[(T_3 - T_2)+k (T_4 - T_3)] \quad (9.4.12)$$

Example 9.4.1.

Pressure and temperature at the start of compression in a Dual cycle are 14.7 psia and 540ER. The compression ratio is 15. Heat addition at constant volume is 300 Btu/lbm of air, while heat addition at constant pressure is 500 Btu/lbm of air. The mass of air contained in the cylinder is 0.03 lbm. Determine (a) the maximum cycle pressure and maximum cycle temperature, (b) the efficiency and work output per kilogram of air, and (c) the MEP. Show the cycle on T-s diagram. Plot the sensitivity diagram of cycle efficiency vs compression ratio.

To solve this problem by CyclePad, we take the following steps:

1. Build
   (A) Take a compression device, two combustion chambers, an expander and a cooler from the closed system inventory shop and connect the five devices to form the Dual cycle.
   (B) Switch to analysis mode.
2. Analysis

(A) Assume a process for each the five processes: (a) compression device as isentropic, (b) first combustion as isocbaric and second combustion as isobaric, (c) expander as isentropic, and (d) cooler as isochoric.

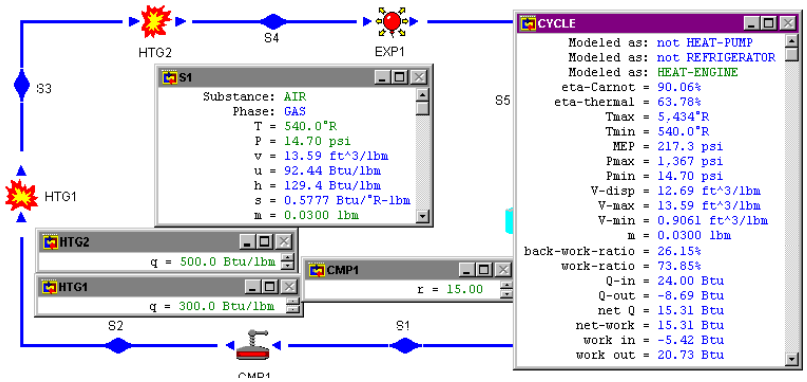

Figure E9.4.1a. Dual cycle.

(B) Input the given information: (a) working fluid is air, (b) the inlet pressure and temperature of the compression device are 14.7 psia and 540ER, (c) the compression ratio of the compression device is 15, (d) the heat addition is 300 Btu/lbm in the isocbaric combustion chamber, (e) the heat addition is 500 Btu/lbm in the isobaric combustion chamber, and (f)The mass of air contained in the cylinder is 0.03 lbm.

3. Display results

(A) Display the T-s diagram and cycle properties results. The cycle is a heat engine. The answers are T_{max}=5434ER, p_{max}=1367 psia, 0=63.78%, MEP=217.3 psia and Wnet=15.31 Btu, and

(B) Display the sensitivity diagram of cycle efficiency vs compression ratio.

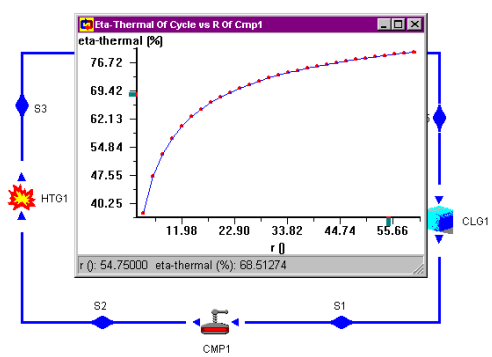

Figure E9.4.1b. Dual cycle sensitivity analysis.

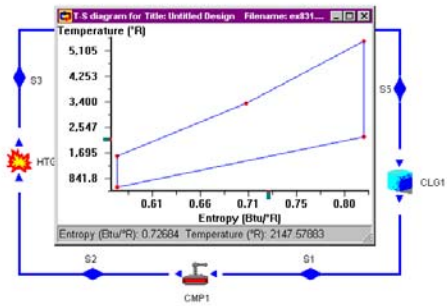

Figure E9.4.1c. Dual cycle T-s diagram.

Homework 9.4. Dual Cycle

1. What five processes make up the Dual cycle?
2. The combustion process in internal combustion engines as an isobaric or isometric heat addition process is over simplistic and not realistic. A real cycle p-v diagram of the Otto or Diesel cycle looks like a curve (combination of isobaric and isometric) rather than a linear line. Are the combustion processes in the Dual cycle more realistic?
3. Can we consider the Otto or Diesel cycle to be special cases of the Dual cycle?
4. Sketch T-s and p-v diagrams for the Dual cycle.
5. Show how the Dual cycle is a compromise between the Otto and Diesel cycles.
6. For a Dual cycle, plot the cycle efficiency as a function of compression ratio from 4 to 16.
7. For a Dual cycle, plot the MEP as a function of compression ratio from 4 to 16.
8. Pressure and temperature at the start of compression in a Dual cycle are 101 kPa and 15EC. The compression ratio is 8. Heat addition at constant volume is 100 kJ/kg of air, while the maximum temperature of the cycle is limited to 2000EC. The mass of air contained in the cylinder is 0.01 kg. Determine (a) the maximum cycle pressure, the MEP, Heat added, heat removed, compression work added, expansion work produced, net work produced and efficiency of the cycle.
   ANSWER: p_{max}=2248 kPa, MEP=988.1 kPa, Q_{add}=15.77 kJ, Q_{remove}=-8.7 kJ, W_{comp}=-2.68 kJ, $W_{expansion}$=9.75 kJ, Wnet=7.07 kJ, and 0=44.85%.
9. Pressure and temperature at the start of compression in a Dual cycle are 101 kPa and 15EC. The compression ratio is 12. Heat addition at constant volume is 100 kJ/kg of air, while the maximum temperature of the cycle is limited to 2000EC. The mass of air contained in the cylinder is 0.01 kg. Determine (a) the maximum cycle pressure, the MEP, Heat added, heat removed, compression work added, expansion work produced, net work produced and efficiency of the cycle.
   ANSWER: p_{max}=3862 kPa, MEP=1067 kPa, Q_{add}=14.60 kJ, Q_{remove}=-6.60 kJ, W_{comp}=-kJ, $W_{expansion}$=11.51 kJ, Wnet=8.00 kJ, and 0=57.48%.
10. Pressure and temperature at the start of compression in a Dual cycle are 101 kPa and 15EC. The compression ratio is 12. Heat addition at constant volume is 100 kJ/kg of

air, while the maximum temperature of the cycle is limited to 2200EC. The mass of air contained in the cylinder is 0.01 kg. Determine (a) the maximum cycle pressure, the MEP, Heat added, heat removed, compression work added, expansion work produced, net work produced and efficiency of the cycle.
ANSWER: p_{max}=3862 kPa, MEP=1189 kPa, Q_{add}=16.60 kJ, Q_{remove}=-7.69 kJ, W_{comp}=-3.51 kJ, W_{comp}=12.43 kJ, Wnet=8.92 kJ, and 0=53.71%.

9.5. LENOIR CYCLE

The first commercially successful internal combustion engine was made by the French engineer Lenoir in 1860. He converted a reciprocating steam engine to admit a mixture of air and methane during the first half of the piston's outward suction stroke, at which point it was ignited with an electric spark and resulting combustion pressure acted on the piston for the remainder of the outward expansion stroke. The following inward stroke of the piston was used to expel the exhaust gases, and then the cycle began over again. The *Lenoir cycle* as shown in Figure 9.5.1 is composed of the following three effective processes:

1-2 isochoric combustion process
2-3 isentropic power expansion process
3-1 isobaric exhaust process

The p-v and T-s diagrams of the cycle is shown in Figure 9.5.2.

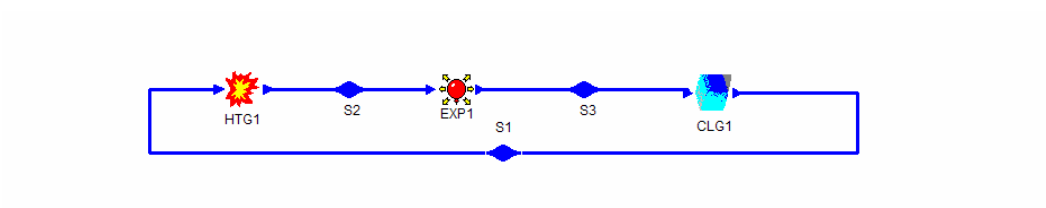

Figure 9.5.1. Lenoir cycle.

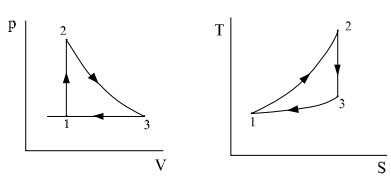

Figure 9.5.2. Lenoir cycle p-v diagram and T-s diagram.

Applying the First law and Second law of thermodynamics of the closed system to each of the three processes of the cycle yields:

$$W_{12} = 0 \tag{9.5.1}$$

$$Q_{12} - 0 = m(u_2 - u_1) \tag{9.5.2}$$

$$Q_{23} = 0 \tag{9.5.3}$$

$$0 - W_{23} = m\,(u_3 - u_2) \tag{9.5.4}$$

$$W_{31} = IpdV = m(p_1v_1 - p_3v_3) \tag{9.5.5}$$

and

$$Q_{31} = m(u_1 - u_3) + W_{31} = m(h_1 - h_3) \tag{9.5.6}$$

The net work (W_{net}), which is also equal to net heat (Q_{net}), is

$$W_{net} = W_{23}+W_{31}= Q_{net} = Q_{12}+Q_{31} \tag{9.5.7}$$

The thermal efficiency of the cycle is

$$0 = W_{net} /Q_{12} = Q_{net} /Q_{12} = 1+ Q_{31} /Q_{12} \tag{9.5.8}$$

This expression for thermal efficiency of the cycle can be simplified if air is assumed to be the working fluid with constant specific heats. Equation (9.5.8) is reduced to:

$$0 = 1- (h_3 - h_1)/(u_2 - u_1) = 1 - k\,T_2\,(r_s -1)/(\,T_2 -T_1) \tag{9.5.9}$$

where r_s is the isentropic volume compression ratio, $r_s=v_3/v_1$.

Because the air-fuel mixture was not compressed before ignition, the engine efficiency was very low and fuel consumption was very high. The fuel-air mixture was ignited by an electric spark inside the cylinder.

Example 9.5.1.

The isochoric heating process of a Lenoir engine receives air at 15EC and 101 kPa. The air is heated to 2000EC. The mass of air contained in the cylinder is 0.01 kg. Determine the pressure at the end of the isochoric heating process, the temperature at the end of the isentropic expansion process, heat added, heat removed, work added, work produced, net work produced, and efficiency of the cycle. Draw the T-s diagram of the cycle.

To solve this problem by CyclePad, we take the following steps:

1. Build

(A) Take a combustion chamber, an expander and a cooler from the closed system inventory shop and connect the three devices to form the Lenoir cycle.
(B) Switch to analysis mode.

2. Analysis
   (A) Assume a process for each the three processes: (a) combustion as isochoric, (b) expander as isentropic, and (c) cooler as isobaric.
   (B) Input the given information: (a) working fluid is air, (b) the inlet pressure and temperature of the combustion device are 101 kPa and 15EC, (c) the temperature at the end of combustion device is 2000EC, and (d) the mass of air is 0.01 kg .
3. Display results
   (A) Display cycle properties results. The cycle is a heat engine. The answers are T_3=986.8 EC, p_2=796.8 kPa, Q_{add}=14.23 kJ, Q_{remove}=-9.75 kJ, W_{comp}=-2.79 kJ, W_{expan}=7.26 kJ, W_{net}=4.48 kJ, and 0=31.46%; and
   (B) Display the T-s diagram.

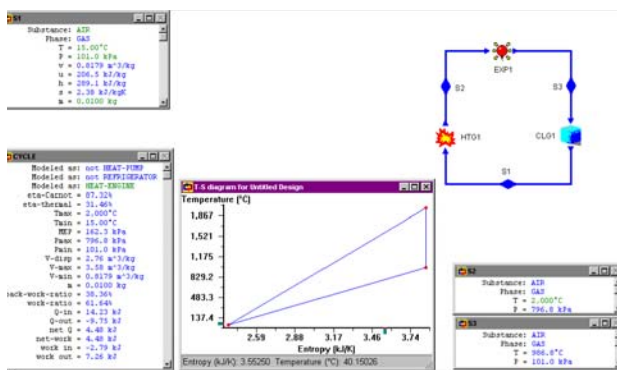

Figure E9.5.1. Lenoir cycle

Homework 9.5. Lenoir Cycle

1. What are the five processes that make up the Lenoir cycle?
2. The isochoric heating process of a Lenoir engine receives air at 15EC and 101 kPa. The air is heated to 2200EC. The mass of air contained in the cylinder is 0.01 kg. Determine the pressure at the end of the isochoric heating process, the temperature at the end of the isentropic expansion process, heat added, heat removed, work added, work produced, net work produced, and efficiency of the cycle.
   ANSWER: T_3=1065EC, p_2=866.9 kPa, Q_{add}=15.66 kJ, Q_{remove}=-10.54 kJ, W_{comp}=-3.01 kJ, W_{expan}=8.13 kJ, W_{net}=5.12 kJ, and 0=32.72%.
3. The isochoric heating process of a Lenoir engine receives air at 60EF and 14.7 psia. The air is heated to 4000EF. The mass of air contained in the cylinder is 0.02 lbm. Determine the pressure at the end of the isochoric heating process, the temperature at the end of the isentropic expansion process, heat added, heat removed, work added, work produced, net work produced, and efficiency of the cycle.

ANSWER: T_3=1953EF, p_2=126.2 psia, Q_{add}=13.49 Btu, Q_{remove}=-9.08 Btu, W_{comp}=-2.59 Btu, W_{expan}=7.01 Btu, W_{net}=4.41 Btu, and 0=32.72%.

4. The isochoric heating process of a Lenoir engine receives air at 80EF and 14.7 psia. The air is heated to 4500EF. The mass of air contained in the cylinder is 0.02 lbm. Determine the pressure at the end of the isochoric heating process, the temperature at the end of the isentropic expansion process, heat added, heat removed, work added, work produced, net work produced, and efficiency of the cycle.
   ANSWER: T_3=2172EF, p_2=135.1 psia, Q_{add}=15.13 Btu, Q_{remove}=-10.03 Btu, W_{comp}=-2.86 Btu, W_{expan}=7.97 Btu, W_{net}=5.11 Btu, and 0=33.74%.

9.6. STIRLING CYCLE

The Stirling cycle is composed of the following four processes:

1-2	isothermal compression
2-3	constant volume heat addition
3-4	isothermal expansion
4-1	constant volume heat removing

Stirling-cycle engine is an external-combustion engine. Figure 9.6.1 shows the Stirling cycle on p-v and T-s diagrams.

During the isothermal compression process 1-2, heat is rejected to maintain a constant temperature T_L. During the isothermal expansion process 3-4, heat is added to maintain a constant temperature T_H. There are also heat interactions along the constant volume heat addition process 2-3 and the constant volume heat removing process 4-1. The quantities of heat in these two constant volume processes are equal but opposite in direction.

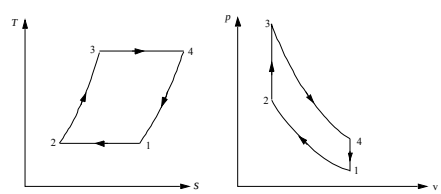

Figure 9.6.1. Stirling cycle on p-v and T-s diagrams.

The operation of the Stirling-cycle engine is shown in Figure 9.6.2. There are two pistons in the cylinder. One is a power piston (P), and the other is the displace piston (D). The purpose of the displace piston is to move the working fluid around from one space to another space through the regenerator. At state 1, the power piston is at BDC (bottom dead center), with the displacer at its TDC (top dead center). The power piston moves from its BDC to TDC to compress the working fluid during the compression process 1-2. From 1-2, the

working fluid in the cylinder is in contact with the low temperature reservoir, so the temperature remains constant (T_1=T_2) and heat is removed. During the heating process 2-3, the displacer moves downward, pushing the working fluid through the regenerator where it picks up heat to reach T_3. During the expansion process 3-4, the working fluid in the cylinder is in contact with the high temperature reservoir, so the temperature remains constant (T_3=T_4) and heat is added. During the cooling process 4-1, the displacer moves upward, pushing the working fluid through the regenerator where it removes heat to reach T_1.

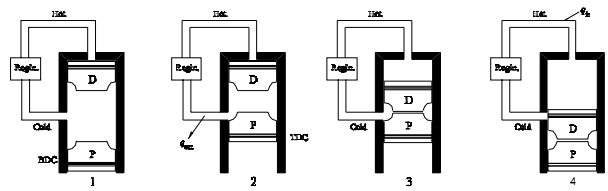

Figure 9.6.2. Stirling cycle operation.

Applying the First law and Second law of thermodynamics of the closed system to each of the four processes of the cycle yields:

$$W_{12} = IpdV,\ Q_{12}=ITdS= T_1(S_2-S_1) \tag{9.6.1}$$

$$Q_{12} - W_{12} = m(u_2 - u_1) =0 \tag{9.6.2}$$

$$W_{23} = IpdV=0 \tag{9.6.3}$$

$$Q_{23} - 0 = m(u_3 - u_2) \tag{9.6.4}$$

$$W_{34} = IpdV,\ Q_{34}=ITdS= T_3(S_4-S_3) \tag{9.6.5}$$

$$Q_{34} - W_{34} = m(u_4 - u_3) =0 \tag{9.6.6}$$

$$W_{41} = IpdV = 0 \tag{9.6.7}$$

and

$$Q_{41} - 0 = m(u_1 - u_4) \tag{9.6.8}$$

The net work (W_{net}), which is also equal to net heat (Q_{net}), is

$$W_{net} =W_{12} +W_{34} = Q_{net} = Q_{12}+ Q_{23}+ Q_{34} + Q_{41} \tag{9.6.9}$$

The thermal efficiency of the cycle is

$$0 = W_{net} /(Q_{34}+Q_{23}) \tag{9.6.10}$$

Example 9.6.1.

A Stirling cycle operates with 0.1 kg of hydrogen as a working fluid between 1000EC and 30EC. The highest pressure and the lowest pressure during the cycle are 3000 kPa and 500 kPa. Determine the heat and work added in each of the four processes, net work, and cycle efficiency.

To solve this problem by CyclePad, we take the following steps:

1. Build
   (A) Take a compression device, a combustion chamber, an expander and a cooler from the closed system inventory shop and connect the four devices to form the Stirling cycle.
   (B) Switch to analysis mode.
2. Analysis
   (A) Assume a process for each of the four processes: (a) compression device as isothermal, (b) combustion as isochoric, (c) expander as isothermal, and (d) cooler as isochoric.
   (B) Input the given information: (a) working fluid is helium, (b) the inlet pressure and temperature of the compression device are 500 kPa and 30EC and m=0.1 kg, (c) the inlet pressure and temperature of the expander are 3000 kPa and 1000EC.
3. Display results
   (A) Display the cycle properties results. The cycle is a heat engine. The answers are: $Q_{12}=W_{12}=-22.46$ kJ, $Q_{23}=300.7$ kJ, $Q_{34}=W_{34}=94.33$ kJ, $Q_{41}=-300.7$ kJ, $W_{net}=71.87$ kJ, $Q_{in}=395.0$ kJ, and 0=18.19%.

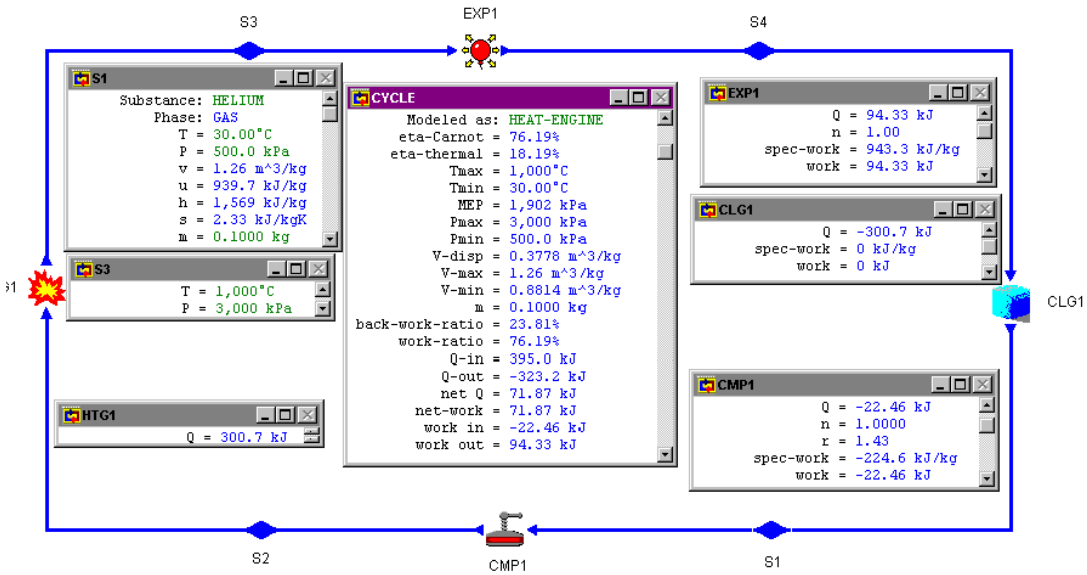

Figure E9.6.1. Stirling cycle.

The Stirling cycle is an attempt to achieve Carnot efficiency by the use of an ideal regenerator.

A device called regenerator can be used to absorb heat during process 4-1 (Q_{41}) and ideally delivering the same quantity of heat during process 2-3 (Q_{23}). These two quantities of heat are represented by the areas underneath of the process 4-1 and process 2-3 of the T-s diagram in Figure 9.6.1. Using the ideal regenerator, Q_{41} is not counted as a part of the heat input. The efficiency of the Stirling cycle can be reduced from Equation (9.6.10) to

$$0 = W_{net} / Q_{12} = 1 - T_3 / T_1 \tag{9.6.11}$$

In this respect, the Stirling cycle has the same efficiency as the Carnot cycle.

The regenerative Stirling cycle is illustrated in Figure 9.6.3. In this figure, the combination of heater #1 and cooler #1 is equivalent to the regenerator. Heat removed from the cooler #1 is added to the heater #1. Since this energy transfer occurs within the cycle internally, the amount of heat added to the heater #1 from the cooler #1 is not a part of heat added to the cycle from its surrounding heat reservoirs. Therefore

$$Q_{in} = Q_{12} \tag{9.6.12}$$

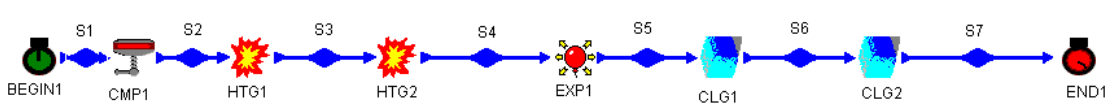

Figure 9.6.3. Regenerative Stirling cycle.

Practical attempts to follow the Stirling cycle present difficulties primarily due to the difficulty of achieving isothermal compression and isothermal expansion in a machine operating at a reasonable speed.

Example 9.6.2 illustrates the analysis of the regenerative Stirling cycle.

Example 9.6.2.

A regenerative Stirling cycle operates with 0.1 kg of helium as a working fluid between 1000EC and 30EC. The highest pressure and the lowest pressure during the cycle are 3000 kPa and 500 kPa. The temperature at the exit of the regenerator (heater #1) and inlet to the heater #2 is 990EC and the temperature at the exit of the regenerator (cooler #1) and inlet to the cooler #2 is 40EC. Determine the heat and work added in each of the four processes, net work, and cycle efficiency.

To solve this problem by CyclePad, we take the following steps:

1. Build
   (A) Take a compression device, a heater (cold-side regenerator) combustion chamber, an expander and two coolers (cooler #1 is the hot-side regenerator) from the closed system inventory shop and connect the four devices to form the regenerative Stirling cycle as shown in Figure 9.6.2.
   (B) Switch to analysis mode.
2. Analysis
   (A) Assume a process for each of the six processes: (a) compression device as isothermal, (b) both heaters as isochoric, (c) expander as isothermal, and (d) both coolers as isochoric.
   (B) Input the given information: (a) working fluid is helium, (b) the inlet pressure and temperature of the compression device are 500 kPa and 30EC and m=0.1 kg, (c) the inlet pressure and temperature of the expander are 3000 kPa and 1000EC, (d) temperature at the exit of the regenerator (heater #1)= 990EC, (e) temperature at the exit of the regenerator (cooler #1)=40EC.
3. Display results
   (A) Display the cycle properties results. The cycle is a heat engine. The answers are: $Q_{12}=W_{12}=-22.46$ kJ, $Q_{23}=Q_{htr\#1}=-Q_{clr\#1}=Q_{regenerator}=297.6$ kJ, $Q_{34}=3.1$ kJ, $Q_{45}=W_{45}=94.33$ kJ, $Q_{56}=-3.1$ kJ, $W_{net}=71.87$ kJ, $Q_{in}=94.33+3.1=97.43$ kJ, and 0=71.87/97.43=73.77%.

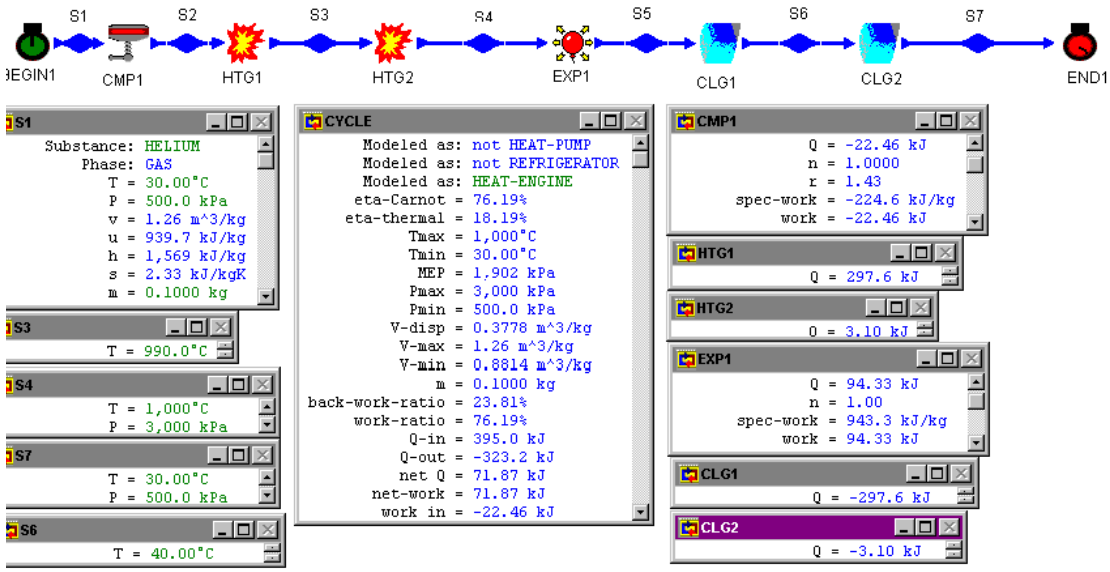

Figure E9.6.2. Regenerative Stirling cycle.

Comment: The regenerator used in this example is not ideal. Yet, the regenerator raises the cycle efficiency almost to the Carnot efficiency.

Homework 9.6. Stirling Cycle.

1. What are the four processes of the basic Stirling cycle?
2. The Stirling cycle uses a concept in its operation. Describe this concept and its principle.
3. What is a regenerator?
4. What is a regenerative Stirling cycle?
5. What would be the cycle efficiency of the Stirling cycle with an ideal regenerator?
6. Sketch T-s and p-v diagrams for the Stirling cycle.
7. Theoretically, would there be any improvement in thermal cycle efficiency by the use of helium instead of air in a perfect Stirling cycle engine?
8. A Stirling cycle operates with 1 lbm of helium as a working fluid between 1800ER and 540ER. The highest pressure and the lowest pressure during the cycle are 450 psia and 75 psia. Determine the heat added, net work, and cycle efficiency.
   ANSWER: W_{net}=367.4 Btu, Q_{in}=1458 Btu, and 0=25.20%.
9. A Stirling cycle operates with 0.1 kg of air as a working fluid between 1000EC and 30EC. The highest pressure and the lowest pressure during the cycle are 3000 kPa and 500 kPa. Determine the heat and work added in each of the four processes, net work, and cycle efficiency.

ANSWER: $Q_{12}=W_{12}=-3.10$ kJ, $Q_{23}=69.52$ kJ, $Q_{34}=W_{34}=13.02$ kJ, $Q_{41}=-69.52$ kJ, $W_{net}=9.92$ kJ, $Q_{in}=82.54$ kJ, and 0=12.02%.

10. A regenerative Stirling cycle operates with 0.1 kg of air as a working fluid between 1000EC and 30EC. The highest pressure and the lowest pressure during the cycle are 3000 kPa and 500 kPa. The temperature at the exit of the regenerator (heater #1) and inlet to the heater #2 is 990EC and the temperature at the exit of the regenerator (cooler #1) and inlet to the cooler #2 is 40EC. Determine the heat added, heat removed, work added, work removed, net work, MEP, and cycle efficiency.
    ANSWER: 82.54 kJ, -72.62 kJ, -3.10 kJ, 13.02 kJ, 9.92 kJ, 1902 kPa, 12.02%.
11. A regenerative Stirling cycle operates with 0.02 lbm of air as a working fluid between 1900EF and 80EF. The highest pressure and the lowest pressure during the cycle are 450 psia and 70 psia. The temperature at the exit of the regenerator (heater #1) and inlet to the heater #2 is 1800EF and the temperature at the exit of the regenerator (cooler #1) and inlet to the cooler #2 is 110EF. Determine the heat added, heat removed, work added, work removed, net work, MEP, and cycle efficiency.
    ANSWER: 7.48 Btu, -6.52 Btu, -2.849 Btu, 1.25 Btu, 0.9607 Btu, 284.5 psia, 12.85%.
12. A regenerative Stirling cycle operates with 0.02 lbm of carbon dioxide as a working fluid between 1900EF and 80EF. The highest pressure and the lowest pressure during the cycle are 450 psia and 70 psia. The temperature at the exit of the regenerator (heater #1) and inlet to the heater #2 is 1800EF and the temperature at the exit of the regenerator (cooler #1) and inlet to the cooler #2 is 110EF. Determine the heat added, heat removed, work added, work removed, net work, MEP, and cycle efficiency.
    ANSWER: 6.48 Btu, -5.85 Btu, -0.1877 Btu, 0.8208 Btu, 0.6331 Btu, 284.5 psia, 9.76%.

9.7. MILLER CYCLE

Alternative to lowering the compression ratio and simultaneously the expansion ratio of an Otto or Diesel cycle, is to lower compression ratio only while the expansion ratio is kept as the original. *Miller* (reference: Miller, R.H., Supercharging and internal cooling cycle for high output, *Transaction of the American Society of Mechanical Engineers*, v69, pp453-457, 1947) proposed a cycle which has the following characteristics:

1. Effective compression stroke is shorter than expansion stroke
2. Increased charging pressure
3. Variable valve timing

Miller proposed the use of early intake valve closing to provide internal cooling before compression so as to reduce compression work. Miller further proposed increasing the boost pressure to compensate for the reduced inlet duration. By proper selection of boost pressure and variation of intake valve closing time, Miller showed that turbo-charged engines could maintain sea-level power while operating over varying altitudes.

A modified Otto cycle is known as the *Miller-Otto cycle* whose p-V and T-s diagrams are shown in Figure 9.7.1. A modified Diesel cycle is known as the *Miller-Diesel cycle* whose p-V and T-s diagrams are shown in Figure 9.7.2.

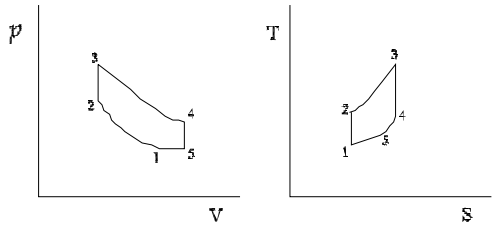

Figure 9.7.1. Miller-Otto cycle.

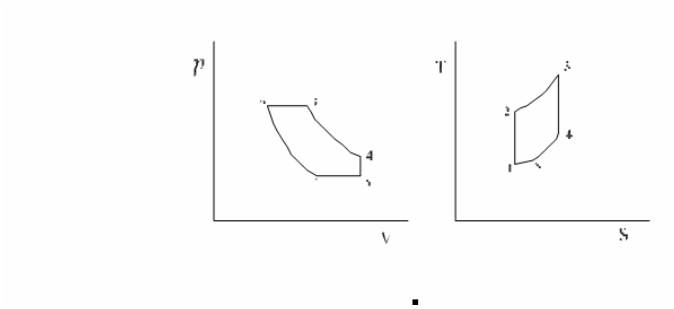

Figure 9.7.2. Miller-Diesel cycle.

A four stroke Miller-Otto cycle without supercharger and inter-cooler is shown in Figure 9.7.3. The intake valve is closed late at state 3.

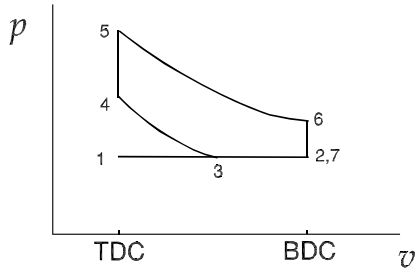

Figure 9.7.3. Miller-Otto cycle without supercharger and inter-cooler.

A four stroke Miller-Otto cycle with supercharger is shown in Figure 9.7.4. The intake valve is closed late at state 3.

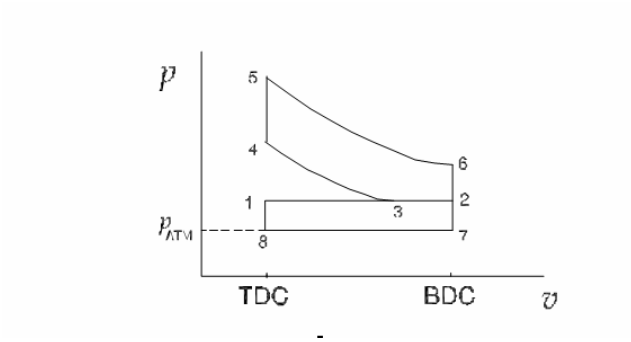

Figure 9.7.4. Miller-Otto cycle with supercharger.

Similarly, an extended expansion stroke is desirable in four-stroke spark ignition and Diesel engines from the viewpoint of providing an increase in thermal cycle efficiency and, for prescribed air and fuel flow rates, an increasing in engine output. Spark ignition engines modified to achieve extended expansion within the engine cylinder are termed Otto-Atkinson cycle (Reference: Ma, T.H., Recent advances in variable valve timing, *Automotive Engine Alternatives* Edited by R.L. Evans, Plenum Press, pp235-252, 1986). By analogy, Diesel engines modified to achieve extended expansion within the engine cylinder are termed Diesel-Atkinson cycle (Reference: Kentfield, J.A.C., Diesel engines with extended strokes, *SAE Transaction Journal of Engines*, v98, pp1816-1825, 1989).

Variable valve timing is being developed to improve the performance and reduce the pollution emissions from internal combustion heat engines for automobiles and trucks. A unique benefit for these engines is that changing the timing of the intake valves can be used to control the engine's compression ratio. These engines can be designed to have a conventionally high compression ratio for satisfactory cold starting characteristics and a reduced compression ratio for better cycle efficiency, exhaust gas emissions and noise characteristics.

Example 9.7.1.

Determine the temperature at the end of the compression process, compression work, expansion work, and thermal efficiency of an ideal Otto cycle. The volume of the cylinder before and after compression are 3 liter and 0.3 liter. Heat added to the air in the combustion chamber is 800 kJ/kg. What is the mass of air in the cylinder? The atmosphere conditions are 101.3 kPa and 20EC.

To solve this problem, we build the Otto cycle. Then (A) Assume isentropic for compression process 1-2, isochoric for the heating process 2-3, isentropic for expansion process 3-4, and isochoric for the cooling process 4-5; (B) input p_1=101.3 kPa, T_1=20EC and V_1=3 L, V_2=0.3 L, heat added in the combustion chamber is 800 kJ/kg, p_5=101.3 kPa, and T_5=20EC; and (C) display results. The results are: T_2=463.2EC, W_{12}=-1.15 kJ, Q_{23}=2.89 kJ, W_{34}=2.89 kJ, W_{net}=1.74 kJ, 0=60.19%, and m=3.62 g as shown in Figure E9.7.1.

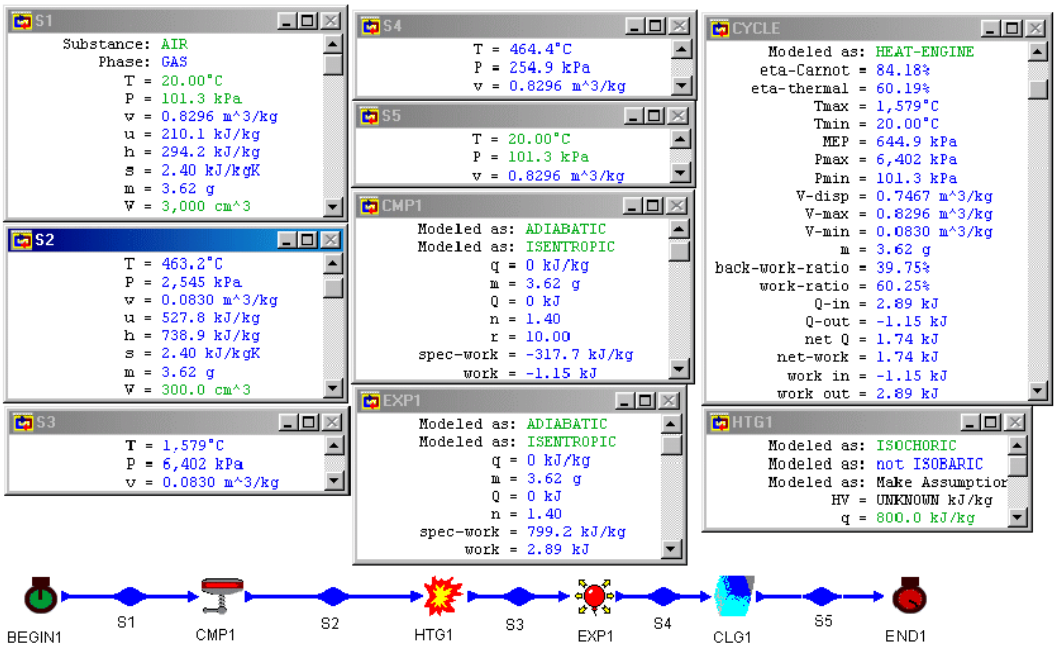

Figure E9.7.1. Otto cycle.

Example 9.7.2.

Determine the temperature at the end of the compression process, compression work, expansion work, and thermal efficiency of an Otto-Miller cycle. The volume of the cylinder before and after compression are 3 liter and 0.3 liter. Heat added to the air in the combustion chamber is 800 kJ/kg. A supercharger and an inter-cooler are used. The supercharger pressure is 180 kPa and the temperature at the end of the inter-cooler is 20EC. The intake valve closes at 2.8 liter. The end temperature of the cooling process of the cycle is 20EC. What is the mass of air in the cylinder? The atmosphere conditions are 101.3 kPa and 20EC.

To solve this problem, we build the cycle as shown in Figure E9.7.2. Then (A) Assume isentropic for both compression processes, isochoric for the heating process, isentropic for expansion process, and isochoric for both cooling processes; (B) input p_1=101.3 kPa and T_1=20EC, p_2=180 kPa, T_3=20EC and V_3=2.8 liter, V_4=0.3 liter, heat added in the combustion chamber is 800 kJ/kg, V_6=3 liter and T_7=20EC; and (C) display results. The results are: T_4=443.2EC, W_{comp}=-1.73 kJ, Q_{add}=4.07 kJ, W_{exp}=4.02 kJ, W_{net}=2.29 kJ, 0=2.29/4.07=56.27%, and m=5.09 g as shown in Figure E9.7.2. Notice that if the supercharger is operated by the exhaust gas, then 0=(4.02-1.54)/4.07=60.93%

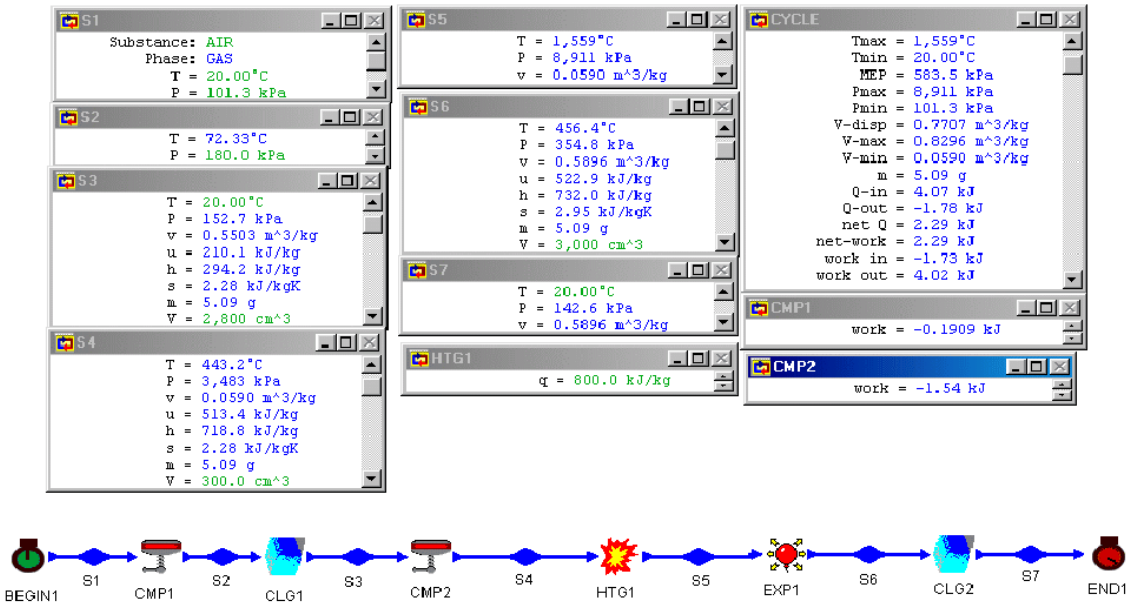

Figure E9.7.2. Miller-Otto cycle with supercharger and inter-cooler.

Homework 9.7. Miller Cycle

1. What is the idea of the Miller cycle?
2. What are the benefits of the Miller cycle?
3. Determine the temperature at the end of the compression process, compression work, expansion work, and thermal efficiency of an Otto-Miller cycle. The volume of the cylinder before and after compression are 3 liter and 0.3 liter. Heat added to the air in the combustion chamber is 800 kJ/kg. A supercharger and an inter-cooler are used. The supercharger pressure is 180 kPa and the temperature at the end of the inter-cooler is 20EC. The intake valve closes at 2.5 liter. The end temperature of the cooling process of the cycle is 20EC. What is the mass of air in the cylinder? The atmosphere conditions are 101.3 kPa and 20EC.
   ANSWER: T_4=411.4EC, W_{comp}=-1.44 kJ, Q_{add}=3.63 kJ, W_{exp}=3.53 kJ, W_{net}=2.08 kJ, 0=57.3%, and m=4.54 g.
4. Determine the temperature at the end of the compression process, compression work, expansion work, and thermal efficiency of an Otto-Miller cycle. The volume of the cylinder before and after compression are 3 liter and 0.3 liter. Heat added to the air in the combustion chamber is 800 kJ/kg. A supercharger and an intercooler are used. The supercharger pressure is 200 kPa and the temperature at the end of the intercooler is 20EC. The intake valve closes at 2.0 liter. The end temperature of the

cooling process of the cycle is 20EC. What is the mass of air in the cylinder? The atmosphere conditions are 101.3 kPa and 20EC.
ANSWER: T_4=353EC, W_{comp}=-1.11 kJ, Q_{add}=3.14 kJ, W_{exp}=2.95 kJ, W_{net}=1.83 kJ, 0=58.28%, and m=3.92 g.

5. Determine the temperature at the end of the compression process, compression work, expansion work, and thermal efficiency of an Otto-Miller cycle. The volume of the cylinder before and after compression are 3 liter and 0.3 liter. Heat added to the air in the combustion chamber is 800 kJ/kg. A supercharger and an intercooler are used. The supercharger pressure is 180 kPa and the temperature at the end of the intercooler is 20EC. The intake valve closes at 2 liter. The end temperature of the cooling process of the cycle is 20EC. What is the mass of air in the cylinder? The atmosphere conditions are 101.3 kPa and 20EC.
ANSWER: T_4=411.4EC, W_{comp}=-1.44 kJ, Q_{add}=3.63 kJ, W_{exp}=3.53 kJ, W_{net}=2.08 kJ, 0=57.3%, and m=4.54 g.

9.8. WICKS CYCLE

The Carnot cycle is the ideal cycle only for the conditions of constant temperature hot and cold surrounding thermal reservoirs. However, the conditions of constant temperature hot and cold surrounding thermal reservoirs do not exist for fuel burning engines. For fuel burning engines, the combustion products are artificially created as a finite size hot reservoir that releases heat over the entire temperature range from its maximum to ambient temperature. The natural environment in terms of air or water bodies is the cold reservoir and can be considered as an infinite reservoir relative to the engine. Thus, an ideal fuel burning engine should operate reversibly between a finite size hot reservoir and an infinite size cold reservoir. Wicks (Reference: Wicks, F., The thermodynamic theory and design of an ideal fuel burning engine, Proceedings of the Intersociety Engineering Conference of Energy Conversion, v2, pp474-481, 1991) proposed a three-process ideal fuel burning engine consisting of an isothermal compression, an isochoric heat addition, and an adiabatic expansion process. The schematic Wicks cycle is shown in Figure 9.8.1. The p-v and T-s diagrams of the cycle is shown in Figure 9.8.2. and an example of the cycle is given in Example 9.8.1.

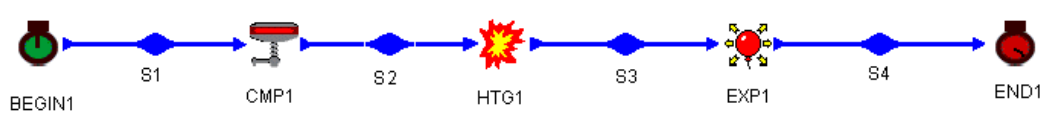

Figure 9.8.1. Wicks cycle.

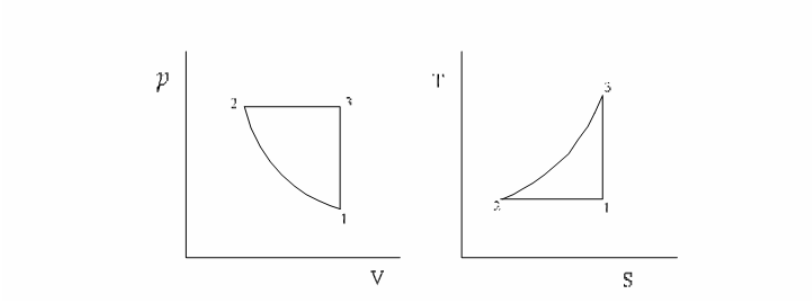

Figure 9.8.2. p-v and T-s diagrams of the Wicks cycle.

Example 9.8.1.

Air is compressed from 14.7 psia and 500ER isothermally to 821.8 psia, heated isochorically to 2500ER, and then expanded isentropically to 14.7 psia in a Wick cycle. Determine the heat added, heat removed, work added, work produced, net work, and cycle efficiency.

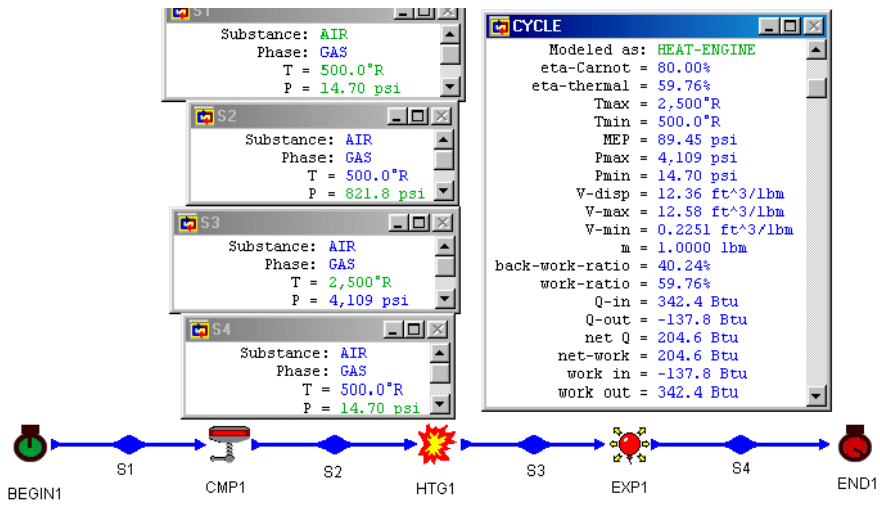

Figure E9.8.1. Wicks cycle.

To solve this problem by CyclePad, we take the following steps:

1. Build
   (A) Take a begin, an end, a compression device, a heater, and an expander from the closed system inventory shop and connect them to form the Wicks cycle as shown in Figure 9.8.1.
   (B) Switch to analysis mode.
2. Analysis

(A) Assume a process for each of the three processes: (a) compression device as isothermal, (b) heater as isochoric, and (c) expander as isentropic.
(B) Input the given information: (a) working fluid is air, (b) the begin pressure and temperature of the compression device are 14.7 psia and 500ER, and m=1 lbm, (c) the end temperature of the heater expander is 2500ER, and (d) the end pressure of the expander is 14.7 psia.

3. Display results
   (A) Display the cycle properties results. The cycle is a heat engine. The answers are: Q_{in}=342.4 Btu, Q_{out}=-137.8 Btu, W_{in}=-137.8 Btu, W_{out}=342.4 Btu, W_{net}=204.6 Btu, MEP=89.45 psia, and 0=59.76%.

Homework 9.8. Wicks Cycle

1. What are the processes of the Wicks cycle?
2. Air is compressed from 100 kPa and 20EC isothermally to 2000 kPa, heated isochorically to 1200EK, and then expanded isentropically to 100 kPa in a Wick cycle. Determine the heat added, heat removed, work added, work produced, net work, and cycle efficiency.

9.9. RALLIS CYCLE

The Rallis cycle is defined by two isothermal processes at temperatures T_H and T_L separated by two regenerative processes which are part constant volume and part constant pressure in any given combination. The Stirling cycle is a special case of the Rallis cycle. Many other Rallis cycles can be defined which have no identifying names.

A conceptual arrangement of a Rallis heat engine is shown in Figure 9.9.1. The p-v and T-s diagrams for the cycle are shown in Figure 9.9.2. T_H is the heat source temperature and T_L is the heat sink temperature. The cycle is composed of the following six processes:

1-2	isobaric cooling
2-3	isothermal compression at T_L
3-4	constant volume heat addition
4-5	isobaric heating
5-6	isothermal expansion at T_H
6-1	constant volume heat removing

During the isothermal compression process 2-3, heat is rejected to maintain a constant temperature T_L. During the isothermal expansion process 5-6, heat is added to maintain a constant temperature T_H. There are heat interactions along the constant volume heat addition process 3-4 and the constant volume heat removing process 6-1; the quantities of heat in these two constant volume processes are equal but opposite in direction. There are also heat interactions along the constant pressure heat addition process 4-5 and the constant pressure heat removing process 1-2. The quantities of heat in these two constant pressure processes are equal but opposite in direction.

Applying the First law and Second law of thermodynamics of the closed system to each of the six processes of the cycle yields:

$$W_{12} = IpdV=p_1(V_2-V_1) \tag{9.9.1}$$

$$Q_{12} - W_{12} = m(u_2 - u_1),\ Q_{12}= -Q_{34} \tag{9.9.2}$$

$$Q_{23} = ITdS=T_L(S_3-S_2) \tag{9.9.3}$$

$$Q_{23} - W_{23} = m(u_3 - u_2) =0 \tag{9.9.4}$$

$$W_{34} = IpdV=0 \tag{9.9.5}$$

$$Q_{34} - 0 = m(u_4 - u_3),\ Q_{34}= -Q_{12} \tag{9.9.6}$$

$$W_{45} = IpdV = p_4(V_5-V_4) \tag{9.9.7}$$

$$Q_{45} - W_{45} = m(u_5 - u_4),\ Q_{45}= -Q_{61}$$

$$Q_{56} = ITdS=T_H(S_6-S_5) \tag{9.9.8}$$

$$Q_{56} - W_{56} = m(u_6 - u_5) =0 \tag{9.9.9}$$

$$W_{61} = IpdV=0 \tag{9.9.10}$$

and

$$Q_{61} - 0 = m(u_1 - u_6),\ Q_{61}= -Q_{45} \tag{9.9.11}$$

The net work (W_{net}), which is also equal to net heat (Q_{net}), is

$$W_{net} =W_{12} +W_{23} +W_{45} +W_{56} = Q_{net}$$

$$= Q_{12}+ Q_{23}+ Q_{34} + Q_{45} + Q_{56} + Q_{61}$$

$$= Q_{23}+ Q_{56}. \tag{9.9.12}$$

The thermal efficiency of the cycle is

$$0 = W_{net} /Q_{56} \tag{9.9.13}$$

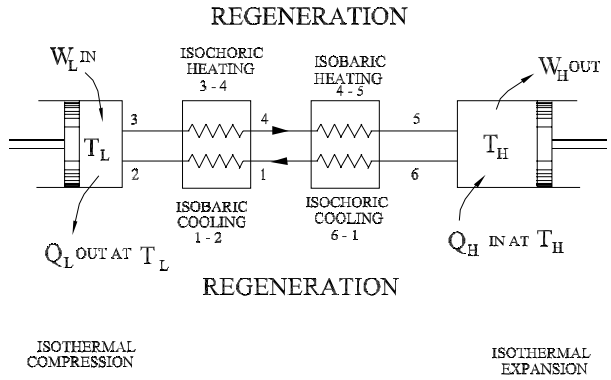

Figure 9.9.1. Rallis cycle.

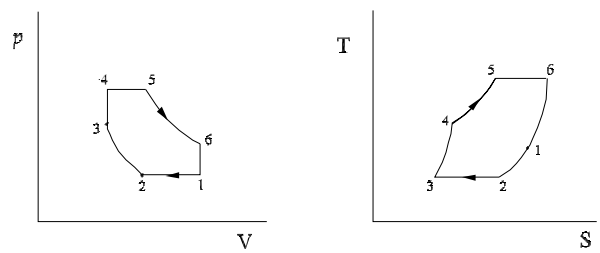

Figure 9.9.2. p-v and T-s diagram of Rallis cycle.

Example 9.9.1.

A Rallis heat engine is shown in Figure E9.9.1a. Helium mass contained in the cylinder is 0.1 lbm. The six processes are:

1-2	isobaric cooling
2-3	isothermal compression at T_L
3-4	constant volume heat addition
4-5	isobaric heating
5-6	isothermal expansion at T_H
6-1	constant volume heat removing

The following information is given:

p_2=15 psia, T_2=60EF, q_{34}=60 Btu/lbm, q_{12}=-60 Btu/lbm, p_5=100 psia, and T_5=800EF. Determine the pressure and temperature of each state of the cycle, work and heat of each process, work input, work output, net work output, heat added, heat removed, MEP and cycle efficiency. Draw the T-s diagram of the cycle.

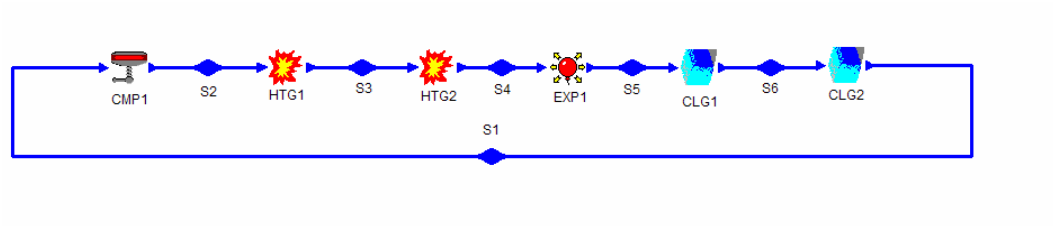

Figure E9.9.1a. Rallis heat engine.

To evaluate this example by CyclePad, we take the following steps:

1. Build
   (A) Take a compression device, two heaters, an expander and two coolers from the closed system inventory shop and connect the six devices to form the cycle as shown in Figure E9.9.1a.
   (B) Switch to analysis mode.
2. Analysis
   (A) Assume a process for each of the six processes: (a) compression device as isothermal, (b) one heater as isochoric and the other as isobaric, (c) expander as isothermal, and (d) one cooler as isochoric and the other as isobaric.
   (B) Input the given information: working fluid is air, m=0.1 lbm, p_2=15 psia, T_2=60EF, q_{34}=60 Btu/lbm, q_{12}=-60 Btu/lbm, p_5=100 psia, and T_5=800EF as shown in Figure E9.9.1b.
3. Display results
   (A) Display the cycle properties results. The cycle is a heat engine. The results are: p_1=15 psia, T_1=108.5EF, p_2=15 psia, T_2=60EF, p_3=45.11 psia, T_3=60EF, p_4=45.11 psia, T_4=108.5EF, p_5=100 psia, T_5=800EF, p_6=33.25 psia, T_6=800EF; q_{12}=-60 Btu/lbm, w_{12}=-24.07 Btu/lbm, q_{23}=-283.8 Btu/lbm, w_{23}=-283.8 Btu/lbm, q_{34}=60 Btu/lbm, w_{34}=2.41 Btu/lbm, q_{45}=512 Btu/lbm, w_{45}=0 Btu/lbm, q_{56}=688 Btu/lbm, w_{56}=688 Btu/lbm, q_{61}=-512 Btu/lbm, w_{61}=0 Btu/lbm; Q_{in}=126 Btu, Q_{out}=-85.58 Btu, Q_{net}=40.42 Btu, W_{in}=-30.79 Btu, W_{out}=71.21 Btu, W_{net}=40.42 Btu, MEP=30.91 psia, and 0=32.08% as shown in Figure E9.9.1c. The T-s diagram of the cycle is shown in Figure E9.9.1d.

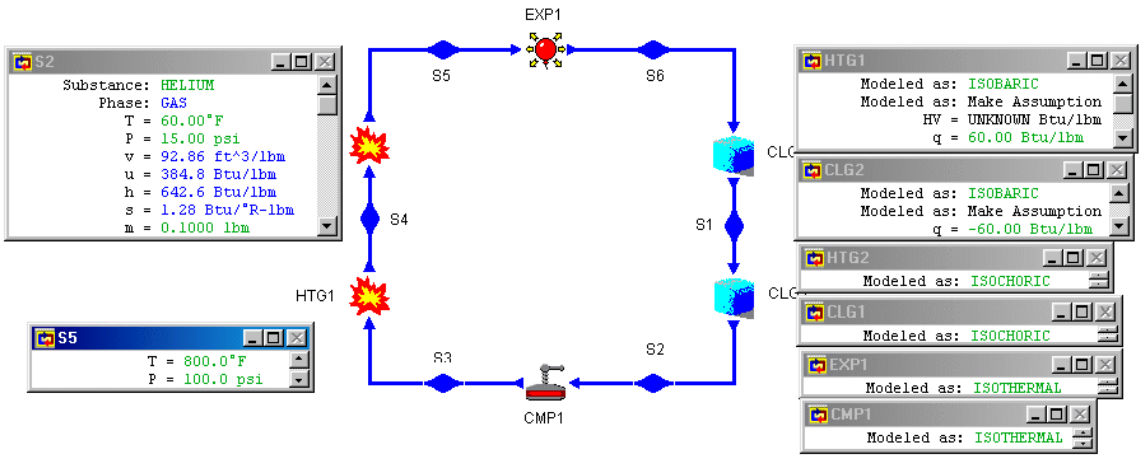

Figure E9.9.1b. Rallis heat engine input.

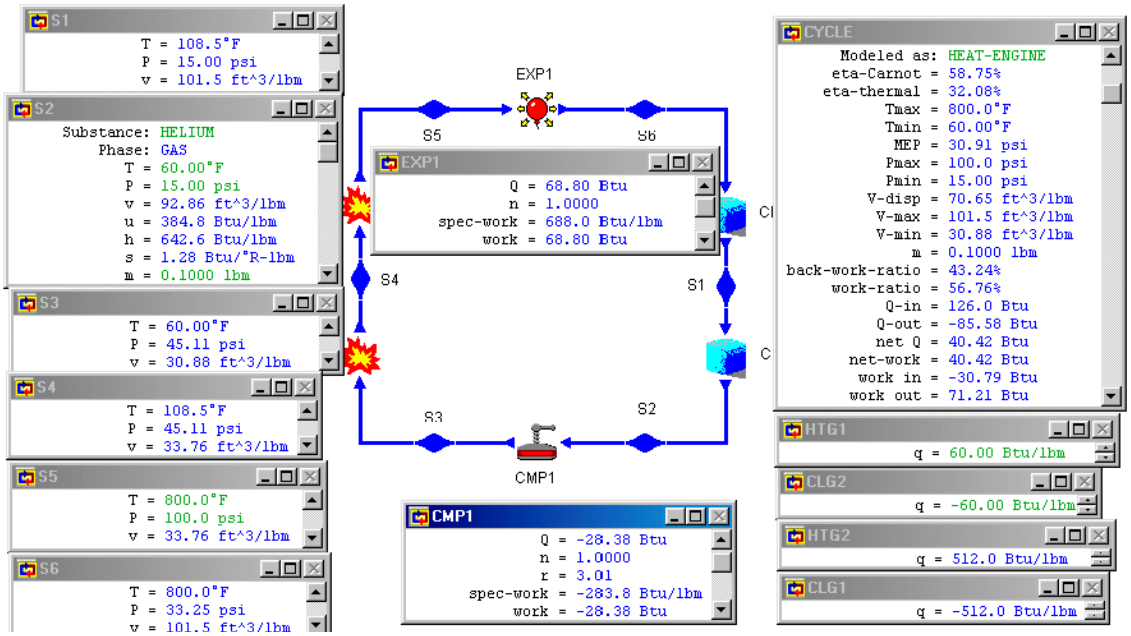

Figure E9.9.1c. Rallis cycle output results.

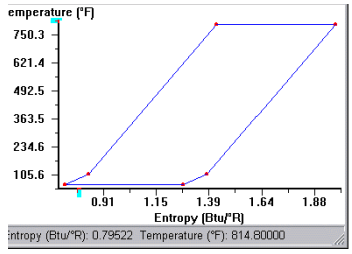

Figure E9.9.1d. Rallis cycle T-s diagram.

Homework 9.9. Rallis Cycle

1. What is the Rallis cycle?
2. How many regenerating processes are there in a Rallis cycle?
3. A Rallis heat engine is shown in Figure E9.9.1a. Air mass contained in the cylinder is 0.1 lbm. The six processes are:
   1-2 isobaric cooling
   2-3 isothermal compression at T_L
   3-4 constant volume heat addition
   4-5 isobaric heating
   5-6 isothermal expansion at T_H
   6-1 constant volume heat removing
   The following information is given:
   p_2=15 psia, T_2=60EF, q_{34}=60 Btu/lbm, q_{12}=-60 Btu/lbm, p_5=100 psia, and T_5=800EF. Determine the pressure and temperature of each state of the cycle, work and heat of each process, work input, work output, net work output, heat added, heat removed, MEP and cycle efficiency. Draw the T-s diagram of the cycle.
   ANSWER: [(15 psia, 310.4EF), (15 psia, 60EF), (59.72 psia, 60EF), (100 psia, 410.5EF), (100 psia, 800EF), (24.54 psia, 800EF)], [(-1.71 Btu, -6 Btu), (-4.92 Btu, -4.92 Btu), (0 Btu, 6 Btu), (2.67 Btu, 9.34 Btu), (12.12 Btu, 12.12 Btu), (0 Btu, -8.38 Btu)], -6.63 Btu, 14.79 Btu, 8.15 Btu, 27.45 Btu, -19.3 Btu, 27.93 psia, 29.70%.
4. A Rallis heat engine is shown in Figure E9.9.1a. Carbon dioxide mass contained in the cylinder is 0.1 lbm. The six processes are:
   1-2 isobaric cooling
   2-3 isothermal compression at T_L
   3-4 constant volume heat addition
   4-5 isobaric heating
   5-6 isothermal expansion at T_H
   6-1 constant volume heat removing
   The following information is given:
   p_2=15 psia, T_2=60EF, q_{34}=60 Btu/lbm, q_{12}=-60 Btu/lbm, p_5=100 psia, and T_5=800EF. Determine the work input, work output, net work output, heat added, heat removed, MEP and cycle efficiency. Draw the T-s diagram of the cycle.
   ANSWER: -4.50 Btu, 9.93 Btu, 5.44 Btu, 21.45 Btu, -16.01 Btu, 26.47 psia, 58.75%.

5. A Rallis heat engine is shown in Figure E9.9.1a. Air mass contained in the cylinder is 0.1 lbm. The six processes are:
   1-2 constant volume heat removing
   2-3 isothermal compression at T_L
   3-4 isobaric heating
   4-5 constant volume heat addition
   5-6 isothermal expansion at T_H
   6-1 isobaric cooling
   The following information is given:
   p_2=15 psia, T_2=60EF, q_{34}=60 Btu/lbm, q_{12}=-60 Btu/lbm, p_5=100 psia, and T_5=800EF.
   Determine the work input, work output, net work output, heat added, heat removed, MEP and cycle efficiency. Draw the T-s diagram of the cycle.
   ANSWER: -6.63 Btu, 14.79 Btu, 8.15 Btu, 27.45 Btu, -19.3 Btu, 27.93 psia, 29.70%.
6. A Rallis heat engine is shown in Figure E9.9.1a. Air mass contained in the cylinder is 0.01 kg. The six processes are:
   1-2 constant volume heat removing
   2-3 isothermal compression at T_L
   3-4 isobaric heating
   4-5 constant volume heat addition
   5-6 isothermal expansion at T_H
   6-1 isobaric cooling
   The following information is given:
   p_2=100 kPa, T_2=15EC, q_{34}=140 kJ/kg, q_{12}=-140 kJ/kg, p_5=700 kPa, and T_5=430EC.
   Determine the work input, work output, net work output, heat added, heat removed, MEP and cycle efficiency. Draw the T-s diagram of the cycle.
   ANSWER: -1.58 kJ, 3.55 kJ, 1.97 kJ, 6.52 kJ, -455 kJ, 191.6 kPa, 30.20%.

9.10. DESIGN EXAMPLES

Although the Carnot cycle is useful in determining the ideal behavior of ideal heat engine, it is not a practical cycle to use in the design of heat engines. There are different reasons for developing cycles other than the Carnot cycle. These reasons includes the characteristics of the energy source available, working fluid chosen for the cycle, material limitations in the hardware and other practical consideration.

CyclePad is a powerful tool for cycle design and analysis. Due to its capabilities, the software allows users to view the cycle effects of varying design input parameters at once. The following examples illustrate the design of several closed-system gas power cycles.

Example 9.10.1.

A six-process internal combustion engine as shown in Figure E9.10.1a is proposed by a junior engineer. Air mass contained in the cylinder is 0.01 kg. The six processes are:

Process 1-2 isentropic compression

Process 2-3 isochoric heating
Process 3-4 isobaric heating
Process 4-5 isentropic expansion
Process 5-6 isochoric cooling
Process 6-1 isobaric cooling

The following information is given:

p_1=100 kPa, T_1=20EC, V_1=10V_2, q_{23}=600 kJ/kg, q_{34}=400 kJ/kg, and T_5=400EC.

Determine the pressure and temperature of each state of the cycle, work and heat of each process, work input, work output, net work output, heat added, heat removed, MEP and cycle efficiency.

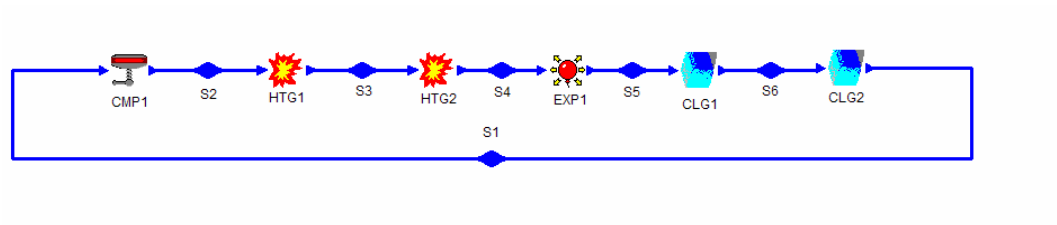

Figure E9.10.1a. Six-process internal combustion engine design.

To evaluate this design by CyclePad, we take the following steps:

1. Build
   (A) Take a compression device, two heaters, an expander and two coolers from the closed system inventory shop and connect the six devices to form the cycle as shown in Figure E9.10.1a.
   (B) Switch to analysis mode.
2. Analysis
   (A) Assume a process for each of the six processes: (a) compression device as isentropic, (b) one heater as isochoric and the other as isobaric, (c) expander as isentropic, and (d) one cooler as isochoric and the other as isobaric.
   (B) Input the given information: working fluid is air, m=0.01 kg, p_1=100 kPa, T_1=20EC, V_1=10V_2, q_{23}=600 kJ/kg, q_{34}=400 kJ/kg, and T_5=400EC.
3. Display results
   (A) Display the cycle properties results. The cycle is a heat engine. The results are: p_1=100 kPa, T_1=20EC, p_2=2512 kPa, T_2=463.2EC, p_3=5368 kPa, T_3=1300EC, p_4=5368 kPa, T_4=1699EC, p_5=124.7 kPa, T_5=400EC, p_6=100 kPa, T_6=266.6EC, Q_{12}=0, W_{12}=-3.18 kJ, Q_{23}=6 kJ, W_{23}=0, Q_{34}=4 kJ, W_{34}=1.14 kJ, Q_{45}=0, W_{45}=9.31 kJ, Q_{56}=-0.9558 kJ, W_{56}=0, Q_{61}=-2.47 kJ, W_{61}=-0.7071 kJ, W_{add}=-3.88 kJ, W_{out}=10.45 kJ, W_{net}=6.57 kJ, Q_{in}=10 kJ, Q_{out}=-3.43 kJ, MEP=448.9 kPa, and 0=65.69% as shown in Figure E9.10.1b.

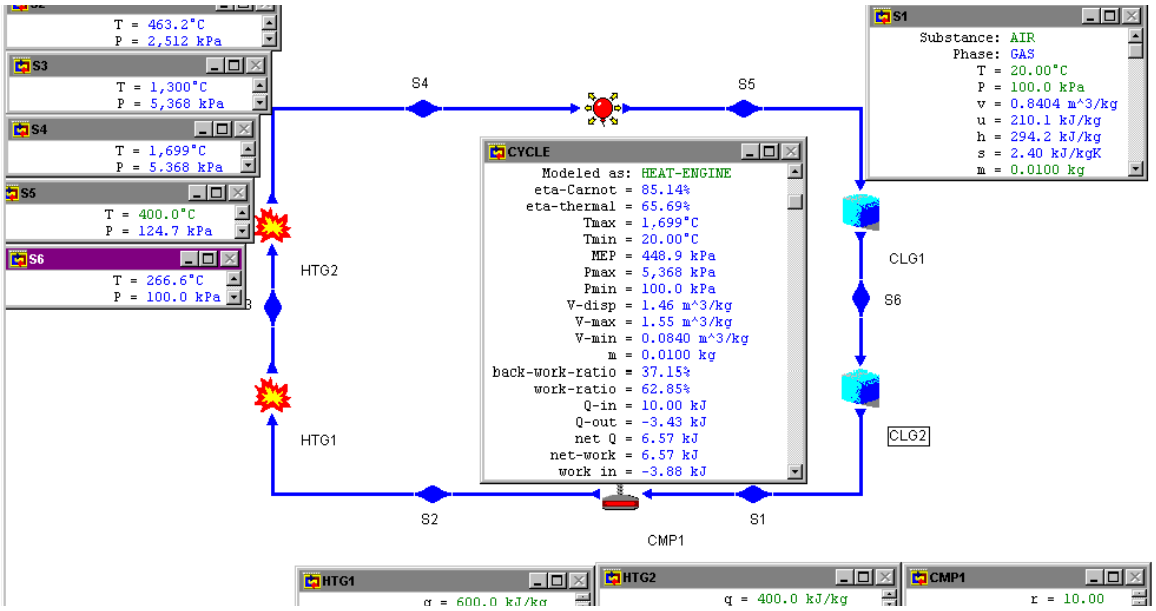

Figure E9.10.1b. Six-process internal combustion engine design results.

The T-s diagram of the cycle is shown in Figure E9.10.1c.

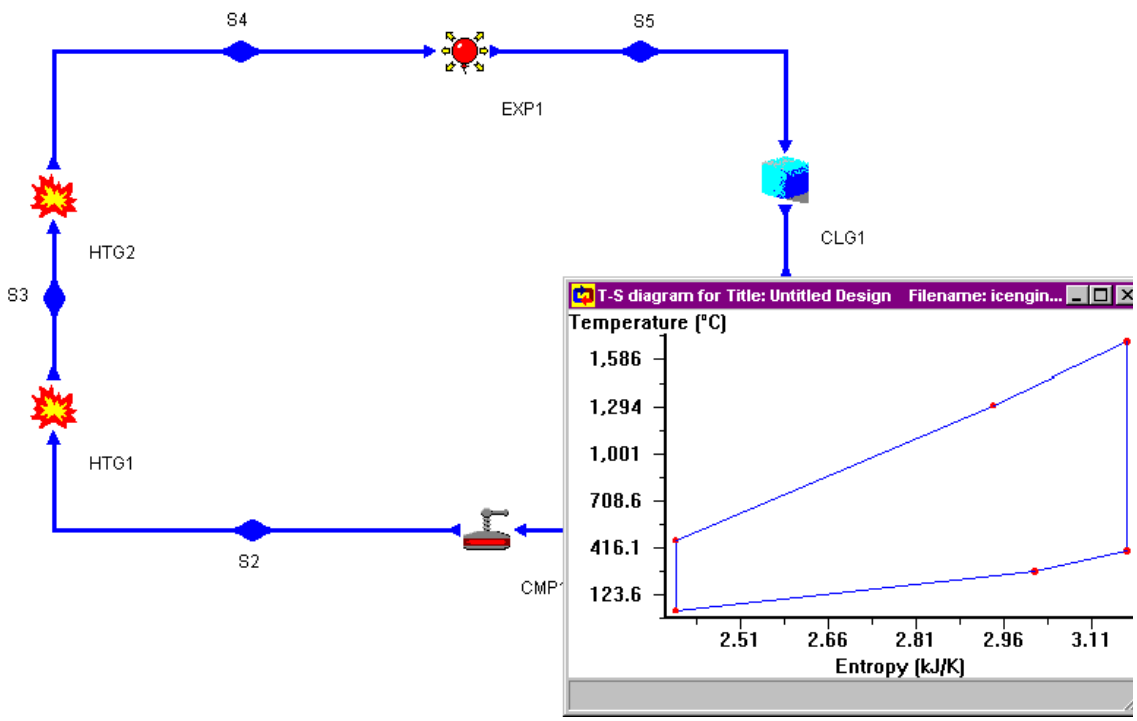

Figure E9.10.1c. T-s diagram.

The sensitivity diagram of 0 (cycle efficiency) versus r (compression ratio) is plotted in Figure E9.10.1d. The figure shows that the larger the compression ratio, the better the cycle efficiency. To improve the proposed engine, a larger compression ratio could be used.

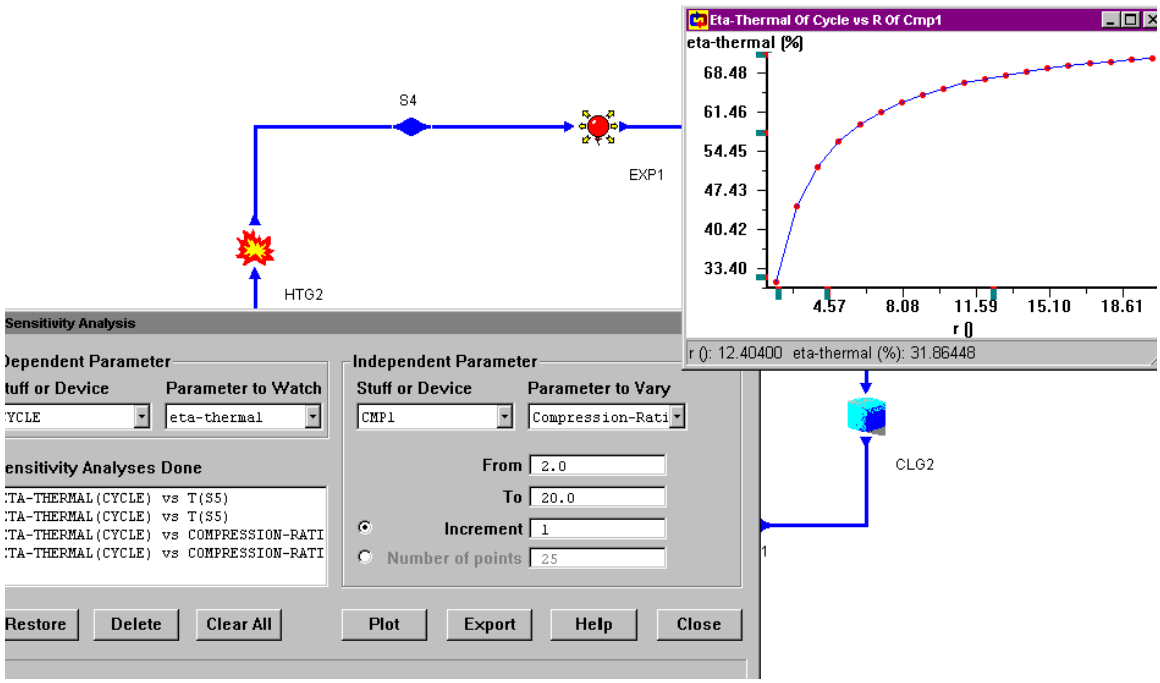

Figure E9.10.1d. Sensitivity diagram.

Example 9.10.2.

A six-process internal combustion engine as shown in Figure E9.10.2a is proposed by a junior engineer. Air mass contained in the cylinder is 0.01 kg. The six processes are:

Process 1-2 isentropic compression
Process 2-3 isochoric heating
Process 3-4 isobaric heating
Process 4-5 isentropic expansion
Process 5-6 isobaric cooling
Process 6-1 isochoric cooling

The following information is given:

p_1=100 kPa, T_1=20EC, V_1=10V_2, q_{23}=600 kJ/kg, q_{34}=400 kJ/kg, and T_5=400EC.

Determine the pressure and temperature of each state of the cycle, work and heat of each process, work input, work output, net work output, heat added, heat removed, MEP and cycle efficiency.

Notice that process 5-6 and process 6-1of the cycle are different from process 5-6 and process 6-1of the cycle proposed in Example 9.10.1.

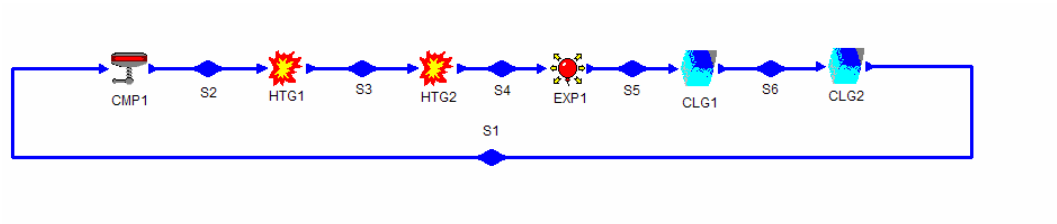

Figure E9.10.2a. Six process internal combustion engine.

To evaluate this design by CyclePad, we take the following steps:

1. Build
   (A) Take a compression device, two heaters, an expander and two coolers from the closed system inventory shop and connect the four devices to form the cycle as shown in Figure E9.10.2a.
   (B) Switch to analysis mode.
2. Analysis
   (A) Assume a process for each of the six processes: (a) compression device as isentropic, (b) one heater as isochoric and the other as isobaric, (c) expander as isentropic, and (d) one cooler as isochoric and the other as isobaric.
   (B) Input the given information: working fluid is air, m=0.01 kg, p_1=100 kPa, T_1=20EC, V_1=10V_2, q_{23}=600 kJ/kg, q_{34}=400 kJ/kg, and T_5=400EC.
3. Display results
   (A) Display the cycle properties results. The cycle is a heat engine. The results are: p_1=100 kPa, T_1=20EC, p_2=2512 kPa, T_2=463.2EC, p_3=5368 kPa, T_3=1300EC, p_4=5368 kPa, T_4=1699EC, p_5=124.7 kPa, T_5=400EC, p_6=124.7 kPa, T_6=92.42EC, Q_{12}=0, W_{12}=-3.18 kJ, Q_{23}=6 kJ, W_{23}=0, Q_{34}=4 kJ, W_{34}=1.14 kJ, Q_{45}=0, W_{45}=9.31 kJ, Q_{56}=-3.09 kJ, W_{56}=-0.8818, Q_{61}=-0.5191 kJ, W_{61}=0 kJ, W_{add}=-4.06 kJ, W_{out}=10.45 kJ, W_{net}=6.39 kJ, Q_{in}=10 kJ, Q_{out}=-3.61 kJ, MEP=436.9 kPa, and 0=63.95% (see Figure E9.10.2b).

It is observed that both the cycle efficiency and MEP of the proposed cycle are less than those of the proposed cycle given by Example 9.10.1.

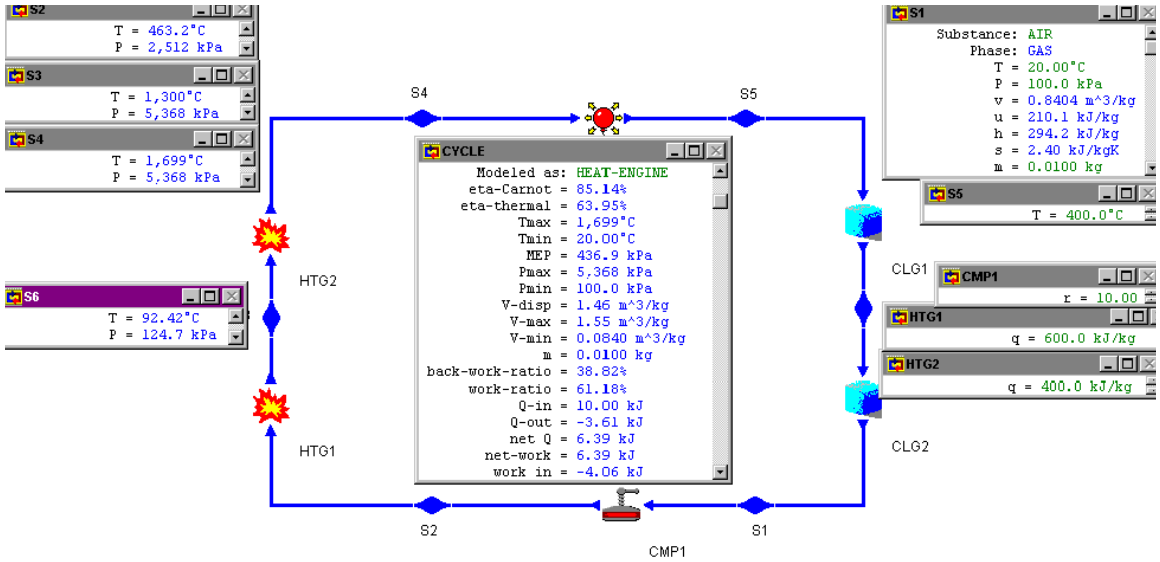

Figure E9.10.2b. Six-process internal combustion engine design results.

The T-s diagram and sensitivity diagram of 0 (cycle efficiency) versus r (compression ratio) is plotted in Figure E9.10.2c.

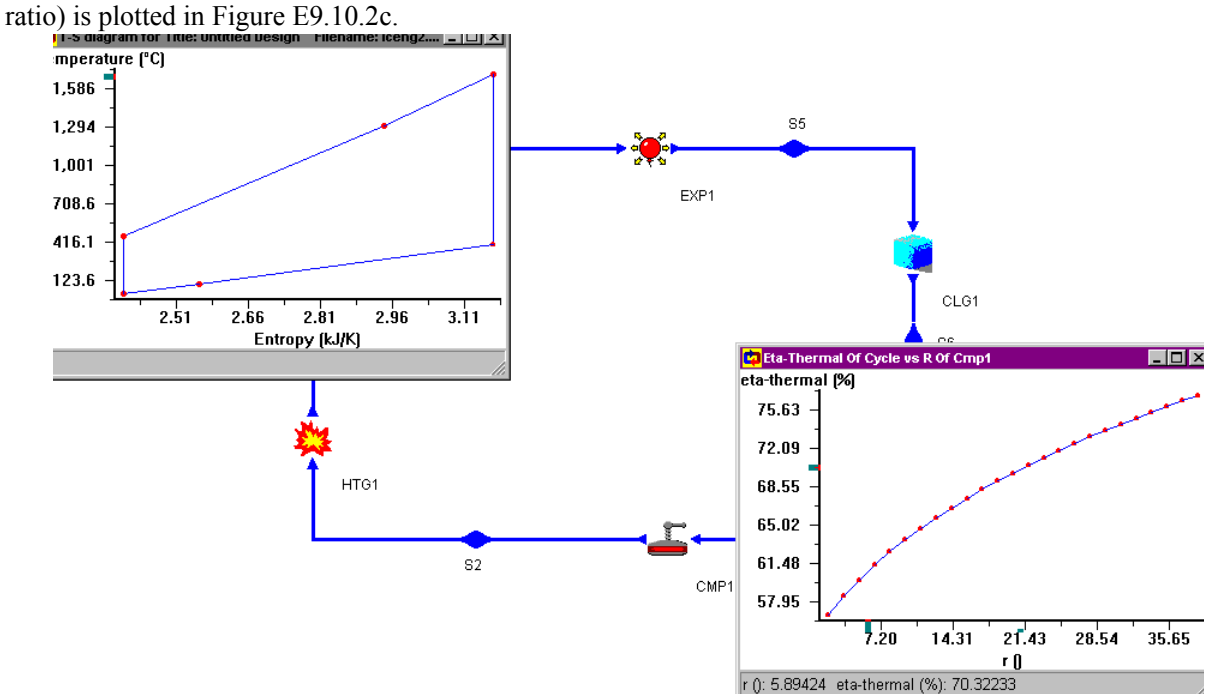

Figure E9.10.2c. T-s diagram and sensitivity diagram of 0 (cycle efficiency) vs r (compression ratio).

Example 9.10.3.

Adding a turbo-charger and a pre-cooler to a Dual cycle is proposed as shown in Figure E9.10.3a. The cylinder volume of the engine is 0.01 m^3. Evaluate the proposed cycle. The basic Dual cycle and the proposed turbo-charger and pre-cooler Dual cycle information is:

Basic Dual cycle:

$p_1=p_2=p_3=p_8=101$ kPa, $T_1=T_2=T_3=T_8=15$EC, $V_3=0.01$ m^3, r(compression ratio)=10, and $q_{45}=q_{56}=300$ kJ/kg.

Turbo-charger and pre-cooler Dual cycle

$p_1=p_8=101$ kPa, $T_1=T_8=15$EC, $p_2=150$ kPa, $T_3=15$EC, $V_3=0.01$ m^3, r(compression ratio)=10, and $q_{45}=q_{56}=300$ kJ/kg.

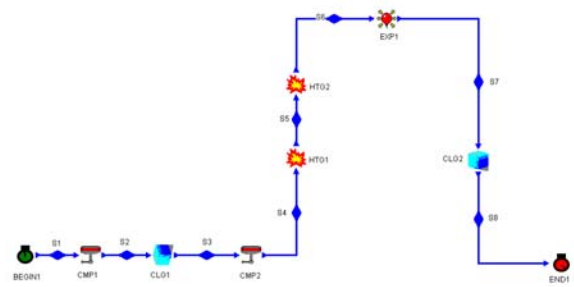

Figure E9.10.3a. Turbo-charger and pre-cooler Dual cycle.

To evaluate this proposed cycle by CyclePad, we take the following steps:

1. Build
   (A) Take two compression devices, two heaters, an expander and two coolers from the closed system inventory shop and connect the devices to form the cycle.
   (B) Switch to analysis mode.
2. Analysis
   (A) Assume a process for each of the seven processes: (a) compression devices as isentropic, (b) one heater as isochoric and the other as isobaric, (c) expander as isentropic, and (d) one cooler as isochoric and the other as isobaric.
   (B) Input the given information (see Figure E9.10.3b): working fluid is air, $p_1=p_8=101$ kPa, $T_1=T_8=15$EC, $p_2=150$ kPa, $T_3=15$EC, $V_3=0.01$ m^3, r(compression ratio)=10, and $q_{45}=q_{56}=300$ kJ/kg.
3. Display results
   (A) Display the cycle properties results. The cycle is a heat engine. The results are: $p_1=100$ kPa, $T_1=15$EC, $p_2=150$ kPa, $T_2=49.47$EC, $p_3=150$ kPa, $T_3=15$EC, $p_4=3768$ kPa, $T_4=450.7$EC, $p_5=5947$ kPa, $T_5=869.2$EC, $p_6=5947$ kPa,

T_6=1168EC, p_7=188.4 kPa, T_7=264.4EC, Q_{12}=0, W_{12}=-0.4486 kJ, Q_{23}=-0.6281 kJ, W_{23}=-0.1795, W_{34}=-5.67 kJ, Q_{45}=0, W_{45}=11.76 kJ, Q_{56}=-3.25 kJ, W_{add}=-6.30 kJ, W_{out}=13.32 kJ, W_{net}=7.02 kJ, Q_{in}=10.89 kJ, Q_{out}=-3.87 kJ, MEP=506.8 kPa, and 0=64.44% as shown in Figure E9.10.3c.

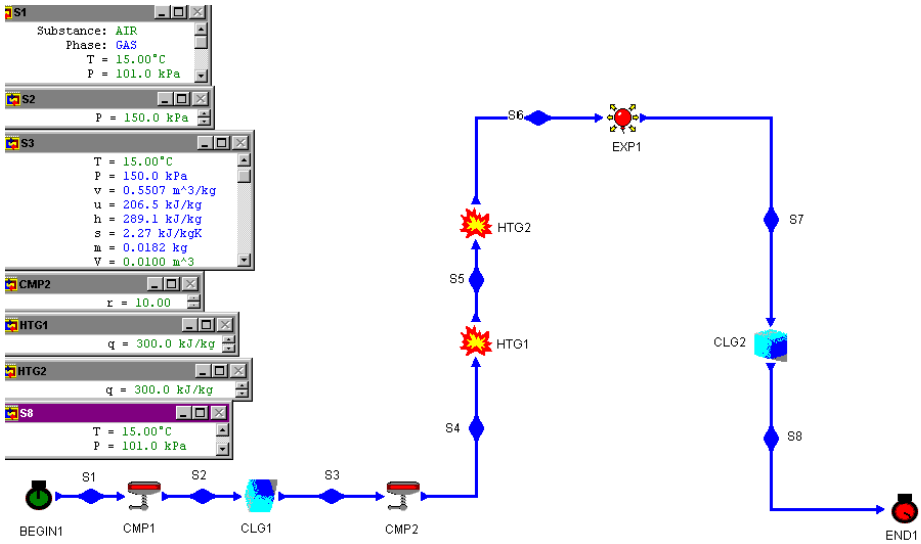

Figure E9.10.3b. Turbo-charger and pre-cooler Dual cycle input.

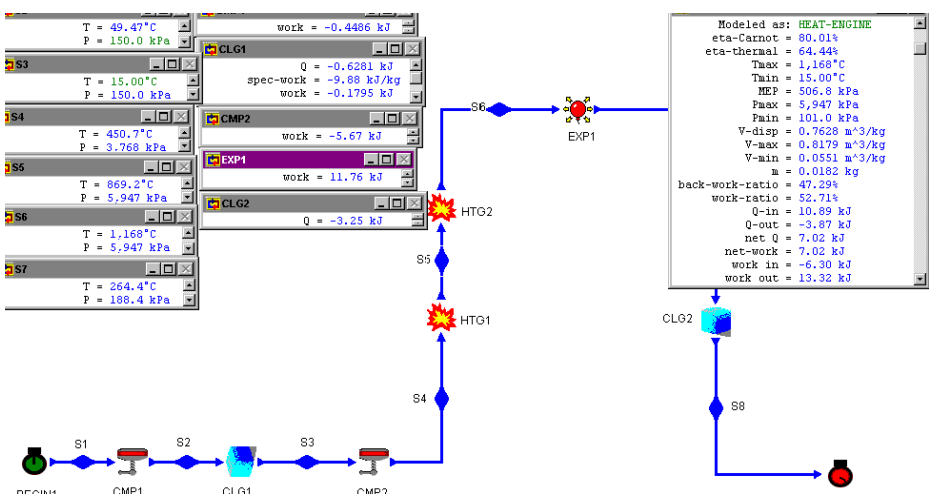

Figure E9.10.3c. Turbo-charger and pre-cooler Dual cycle result.

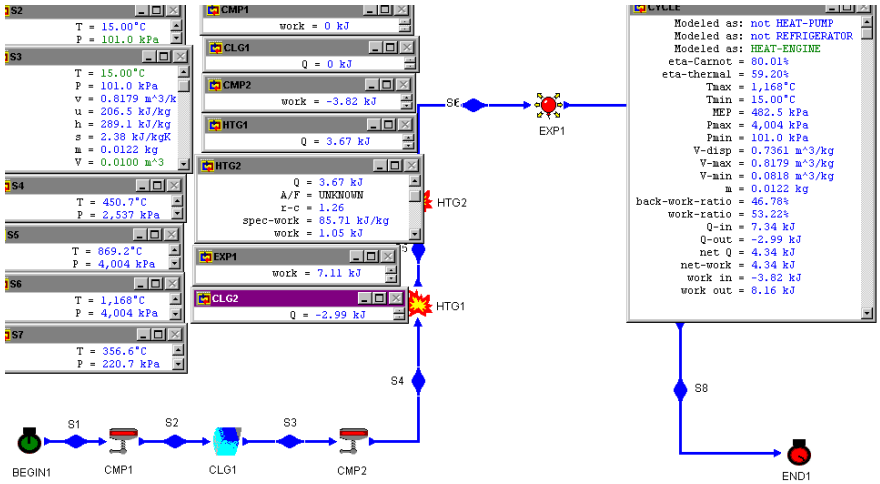

Figure E9.10.3d. Dual cycle without result turbo-charger and pre-cooler.

For the Dual cycle without turbo-charger and pre-cooler, the input are: $p_1=p_2=p_3=p_8=101$ kPa, $T_1=T_2=T_3=T_8=15$EC, $V_3=0.01$ m^3, r(compression ratio)=10, and $q_{45}=q_{56}=300$ kJ/kg as shown in Figure E9.10.3d.

The output results are: $p_1=p_2=p_3=101$ kPa, $T_1=T_2=T_3=15$EC, $p_4=2537$ kPa, $T_4=450.7$EC, $p_5=4004$ kPa, $T_5=869.2$EC, $p_6=4004$ kPa, $T_6=1168$EC, $p_7=220.7$ kPa, $T_7=355.6$EC, $Q_{12}=0$, $W_{12}=-0$ kJ, $Q_{23}=-0$ kJ, $W_{23}=-0$ kJ, $W_{34}=-3.82$ kJ, $Q_{45}=0$, $W_{45}=7.11$ kJ, $Q_{56}=-2.99$ kJ, $W_{add}=-3.82$ kJ, $W_{out}=8.16$ kJ, $W_{net}=4.34$ kJ, $Q_{in}=7.34$ kJ, $Q_{out}=-2.94$ kJ, MEP=482.5 kPa, and 0=59.20% as shown in Figure E9.10.3d.

It is observed that both the cycle efficiency and MEP of the proposed cycle are better than those of the Dual cycle without turbo-charger and pre-cooler.

Homework 9.10. Design

1. An imaginary ideal gas cycle is made by three processes. Air at 1 bar, 0.5 m^3 and 300 K is compressed in a constant volume compression process (Process 1-2, zero work) to 6 bar; air is expanded in an isentropic expansion process Process (2-3) to 1 bar; and air is compressed in an isobaric compression process (Process 3-1) to 0.5 m^3. Find the heat added, heat removed, work added, work produced, net work produced, and cycle efficiency.
   ANSWER: 625 kJ, -454.3 kJ, -129.8 kJ, 300.5 kJ, 170.7 kJ, 27.31%.
2. An imaginary ideal gas cycle is made by three processes. Air at 1 bar, 0.5 m^3 and 300 K is compressed in a constant volume compression process (Process 1-2, zero work) to 8 bar; air is expanded in an isentropic expansion process Process (2-3) to 1 bar; and air is compressed in an isobaric compression process (Process 3-1) to 0.5 m^3. Find the heat added, heat removed, work added, work produced, net work produced, and cycle efficiency.
   ANSWER: 875 kJ, -597.7 kJ, -170.8 kJ, 448.0 kJ, 277.1 kJ, 31.67%.
3. An imaginary ideal gas cycle is made by three processes. Air at 14.7 psia, 12 ft^3 and 80EF is compressed in a constant volume compression process (Process 1-2, zero

work) to 120 psia; air is expanded in an isentropic expansion process Process (2-3) to 14.7 psia; and air is compressed in an isobaric compression process (Process 3-1) to 12 ft^3. Find the heat added, heat removed, work added, work produced, net work produced, and cycle efficiency.
ANSWER: 584.6 Btu, -397.7 Btu, -113.6 Btu, 300.6 Btu, 186.9 Btu, 31.98%.

4. An imaginary ideal gas cycle is made by three processes. Air at 14.7 psia, 12 ft^3 and 80EF is compressed in a constant volume compression process (Process 1-2, zero work) to 100 psia; air is expanded in an isentropic expansion process Process (2-3) to 14.7 psia; and air is compressed in an isobaric compression process (Process 3-1) to 12 ft^3. Find the heat added, heat removed, work added, work produced, net work produced, and cycle efficiency.
ANSWER: 473.6 Btu, -335.2 Btu, -95.77 Btu, 234.2 Btu, 138.4 Btu, 29.23%.
5. An imaginary ideal gas engine cycle is made by three processes. Air at 1 bar, 0.05 m^3 and 300 K is compressed in a constant volume compression process (Process 1-2, zero work) to 6 bar; air is expanded in an isobaric expansion process Process (2-3) to 0.9 m^3; and 100 kJ of heat is removed from air in a cooling process (Process 3-1) to 1 bar, 0.05 m^3 and 300 K. Find the heat added, heat removed, work added, work produced, net work produced, and cycle efficiency.
ANSWER: 146.5 kJ, -100.0 kJ, 0 kJ, 46.50 kJ, 46.50 kJ, 31.74%.
6. An imaginary ideal gas engine cycle is made by three processes. Air at 1 bar, 0.05 m^3 and 300 K is compressed in a constant volume compression process (Process 1-2, zero work) to 8 bar; air is expanded in an isobaric expansion process Process (2-3) to 0.9 m^3; and 100 kJ of heat is removed from air in a cooling process (Process 3-1) to 1 bar, 0.05 m^3 and 300 K. Find the heat added, heat removed, work added, work produced, net work produced, and cycle efficiency.
ANSWER: 199.5 kJ, -100.0 kJ, 0 kJ, 99.50 kJ, 99.50 kJ, 49.87%.
7. An imaginary ideal gas engine cycle is made by three processes. Air at 1 bar, 0.05 m^3 and 300 K is compressed in a constant volume compression process (Process 1-2, zero work) to 8 bar; air is expanded in an isobaric expansion process Process (2-3) to 0.9 m^3; and 120 kJ of heat is removed from air in a cooling process (Process 3-1) to 1 bar, 0.05 m^3 and 300 K. Find the heat added, heat removed, work added, work produced, net work produced, and cycle efficiency.
ANSWER: 199.3 kJ, -120.0 kJ, 0 kJ, 79.34 kJ, 79.34 kJ, 39.80%.
8. An imaginary ideal gas engine cycle is made by three processes. Air at 14.7 psia, 2.5 ft^3 and 80EF is compressed in a constant volume compression process (Process 1-2, zero work) to 120 psia; air is expanded in an isobaric expansion process Process (2-3) to 0.9 m^3; and 120 Btu of heat is removed from air in a cooling process (Process 3-1) to 14.7 psia, 2.5 ft^3 and 80EF. Find the heat added, heat removed, work added, work produced, net work produced, and cycle efficiency.
ANSWER: 165.3 Btu, -120.0 Btu, 0 Btu, 45.32 Btu, 45.32 Btu, 27.41%.
9. An imaginary ideal gas engine cycle is made by three processes. Heat in the amount of 30 kJ is added to air at 1 bar, 0.005 m^3 and 300 K in a heating process (Process 1-2) to 6 bar and 0.015 m^3; air is expanded in a constant volume process Process (2-3, zero work) to 1 bar; and air is compressed in an isobaric process (Process 3-1) to 1

bar, 0.005 m^3 and 300 K. Find the heat added, heat removed, work added, work produced, net work produced, and cycle efficiency.
ANSWER: 30.0 kJ, -22.25 kJ, -1 kJ, 8.75 kJ, 7.75 kJ, 25.83%.

10. An imaginary ideal gas engine cycle is made by three processes. Heat in the amount of 30 kJ is added to air at 1 bar, 0.005 m^3 and 300 K in a heating process (Process 1-2) to 8 bar and 0.015 m^3; air is expanded in a constant volume process Process (2-3, zero work) to 1 bar; and air is compressed in an isobaric process (Process 3-1) to 1 bar, 0.005 m^3 and 300 K. Find the heat added, heat removed, work added, work produced, net work produced, and cycle efficiency.
ANSWER: 30.0 kJ, -29.75 kJ, -1 kJ, 1.25 kJ, 0.25 kJ, 0.8333%.
11. An imaginary ideal gas engine cycle is made by three processes. Heat in the amount of 50 kJ is added to air at 100 kPa, 0.005 m^3 and 25EC in a heating process (Process 1-2) to 600 kPa and 0.015 m^3; air is expanded in a constant volume process Process (2-3, zero work) to 1 bar; and air is compressed in an isobaric process (Process 3-1) to 100 kPa, 0.005 m^3 and 25EC. Find the heat added, heat removed, work added, work produced, net work produced, and cycle efficiency.
ANSWER: 50.0 kJ, -29.75 kJ, -1 kJ, 21.25 kJ, 20.25 kJ, 40.50%.
12. An imaginary ideal gas engine cycle is made by three processes. Heat in the amount of 40 Btu is added to air at 14.7 psia, 0.4 ft^3 and 77EF in a heating process (Process 1-2) to 100 psia and 0.4 ft^3; air is expanded in a constant volume process Process (2-3, zero work) to 14.7 psia; and air is compressed in an isobaric process (Process 3-1) to 14.7 psia, 0.4 ft^3 and 77EF. Find the heat added, heat removed, work added, work produced, net work produced, and cycle efficiency.
ANSWER: 40.0 Btu, -18.64 Btu, -0.8162 Btu, 22.17 Btu, 21.36 kJ, 53.39%.
13. Air at 1 bar, 0.1 m^3 and 300 K is (A) heated reversibly at constant volume until its pressure is two times of its initial value; (B) heated reversibly at constant pressure until the volume is two times of its initial value; (C) cooled reversibly at constant volume until its pressure returns to its initial value; and (D) cooled reversibly at constant pressure to the initial state. Find the heat added, heat removed, work added, work produced, net work produced, and cycle efficiency.
ANSWER: 95.0 kJ, -85.0 kJ, -10.0 kJ, 20.0 kJ, 10.0 kJ, 10.53%.
14. Air at 1 bar, 0.1 m^3 and 300 K is (A) heated reversibly at constant volume until its pressure is two times of its initial value; (B) heated reversibly at constant pressure until the volume is three times of its initial value; (C) cooled reversibly at constant volume until its pressure returns to its initial value; and (D) cooled reversibly at constant pressure to the initial state. Find the heat added, heat removed, work added, work produced, net work produced, and cycle efficiency.
ANSWER: 165.0 kJ, -145.0 kJ, -20.0 kJ, 40.0 kJ, 20.0 kJ, 12.12%.
15. Air at 100 kPa, 0.05 m^3 and 30EC is (A) heated reversibly at constant volume until its pressure is two times of its initial value; (B) heated reversibly at constant pressure until the volume is two times of its initial value; (C) cooled reversibly at constant volume until its pressure returns to its initial value; and (D) cooled reversibly at constant pressure to the initial state. Find the heat added, heat removed, work added, work produced, net work produced, and cycle efficiency.
ANSWER: 187.5 kJ, -162.5 kJ, -25.0 kJ, 50.0 kJ, 25.0 kJ, 13.33%.

16. Helium at 100 kPa, 0.05 m^3 and 30EC is (A) heated reversibly at constant volume until its pressure is two times of its initial value; (B) heated reversibly at constant pressure until the volume is two times of its initial value; (C) cooled reversibly at constant volume until its pressure returns to its initial value; and (D) cooled reversibly at constant pressure to the initial state. Find the heat added, heat removed, work added, work produced, net work produced, and cycle efficiency.
    ANSWER: 132.1 kJ, -107.1 kJ, -25.0 kJ, 50.0 kJ, 25.0 kJ, 18.93%.
17. Helium at 14.7 psia, 1 ft^3 and 80EF is (A) heated reversibly at constant volume until its pressure is 40 psia; (B) heated reversibly at constant pressure until the volume is 5 ft^3; (C) cooled reversibly at constant volume until its pressure returns to its initial value; and (D) cooled reversibly at constant pressure to the initial state. Find the heat added, heat removed, work added, work produced, net work produced, and cycle efficiency.
    ANSWER: 80.8 Btu, -62.07 Btu, -10.88 Btu, 29.61 Btu, 18.73 kJ, 23.18%.
18. Air at 100 kPa, 0.1 m^3 and 300 K undergoes the following cycle of operations: (A) heating at constant volume from 300 K to 600 K; (B) isothermal expansion to 0.3 m^3; (C) cooling at constant volume from 600 K to 300 K; (D) isothermal compression to the initial state. Find the heat added, heat removed, work added, work produced, net work produced, and cycle efficiency.
    ANSWER: 46.97 kJ, -35.99 kJ, -10.99 kJ, 21.97 kJ, 10.99 kJ, 23.39%.
19. Air at 100 kPa, 0.1 m^3 and 300 K undergoes the following cycle of operations: (A) heating at constant volume from 300 K to 800 K; (B) isothermal expansion to 0.3 m^3; (C) cooling at constant volume from 800 K to 300 K; (D) isothermal compression to the initial state. Find the heat added, heat removed, work added, work produced, net work produced, and cycle efficiency.
    ANSWER: 70.96 kJ, -52.65 kJ, -10.99 kJ, 29.30 kJ, 18.31 kJ, 25.80%.
20. Carbon dioxide at 100 kPa, 0.1 m^3 and 300 K undergoes the following cycle of operations: (A) heating at constant volume from 300 K to 800 K; (B) isothermal expansion to 0.3 m^3; (C) cooling at constant volume from 800 K to 300 K; (D) isothermal compression to the initial state. Find the heat added, heat removed, work added, work produced, net work produced, and cycle efficiency.
    ANSWER: 86.77 kJ, -68.46 kJ, -10.99 kJ, 29.30 kJ, 18.31 kJ, 21.10%.
21. Helium at 100 kPa, 0.1 m^3 and 300 K undergoes the following cycle of operations: (A) heating at constant volume from 300 K to 800 K; (B) isothermal expansion to 0.3 m^3; (C) cooling at constant volume from 800 K to 300 K; (D) isothermal compression to the initial state. Find the heat added, heat removed, work added, work produced, net work produced, and cycle efficiency.
    ANSWER: 54.17 kJ, -35.86 kJ, -10.99 kJ, 29.30 kJ, 18.31 kJ, 33.80%.
22. Air at 100 kPa, 1 m^3 and 300 K is heated to 1200 K at constant pressure. It then expands isentropically until the temperature falls to 900 K, is then cooled at constant volume to 300 K, and compressed isothermally to its initial state.
23. Find the heat added, heat removed, work added, work produced, net work produced, and cycle efficiency.
    ANSWER: 1050 kJ, -710.5 kJ, -210.5 kJ, 550 kJ, 339.5 kJ, 32.33%.

24. Air at 100 kPa, 1 m^3 and 300 K is heated to 1600 K at constant pressure. It then expands isentropically until the temperature falls to 1000 K, is then cooled at constant volume to 300 K, and compressed isothermally to its initial state.
25. Find the heat added, heat removed, work added, work produced, net work produced, and cycle efficiency.
    ANSWER: 1517 kJ, -868.2 kJ, -284.9 kJ, 933.3 kJ, 648.4 kJ, 42.75%.
26. Helium at 100 kPa, 1 m^3 and 300 K is heated to 1600 K at constant pressure. It then expands isentropically until the temperature falls to 1000 K, is then cooled at constant volume to 300 K, and compressed isothermally to its initial state.
27. Find the heat added, heat removed, work added, work produced, net work produced, and cycle efficiency.
    ANSWER: 1080 kJ, -585.8 kJ, -237.5 kJ, 731.8 kJ, 494.3 kJ, 45.76%.
28. Carbon dioxide at 100 kPa, 1 m^3 and 300 K is heated to 1600 K at constant pressure. It then expands isentropically until the temperature falls to 1000 K, is then cooled at constant volume to 300 K, and compressed isothermally to its initial state. Find the heat added, heat removed, work added, work produced, net work produced, and cycle efficiency.
    ANSWER: 1928 kJ, -1134 kJ, -329.5 kJ, 1123 kJ, 793.5 kJ, 41.17%.
29. Air at 200 kPa, 0.5 m^3 and 300 K is heated to 1800 K at constant pressure. It then expands isentropically until the temperature falls to 300 K, is then compressed isothermally to its initial state. Find the heat added, heat removed, work added, work produced, net work produced, and cycle efficiency.
    ANSWER: 1750 kJ, -627.1 kJ, -627.1 kJ, 1750 kJ, 1123 kJ, 64.16%.
30. Air at 200 kPa, 0.5 m^3 and 300 K is heated to 1500 K at constant pressure. It then expands isentropically until the temperature falls to 300 K, is then compressed isothermally to its initial state. Find the heat added, heat removed, work added, work produced, net work produced, and cycle efficiency.
    ANSWER: 1400 kJ, -563.3 kJ, -563.3 kJ, 1400 kJ, 836.7 kJ, 59.76%.
31. Helium at 200 kPa, 0.5 m^3 and 300 K is heated to 1500 K at constant pressure. It then expands isentropically until the temperature falls to 300 K, is then compressed isothermally to its initial state. Find the heat added, heat removed, work added, work produced, net work produced, and cycle efficiency.
    ANSWER: 997.0 kJ, -401.2 kJ, -401.2 kJ, 997.0 kJ, 595.9 kJ, 59.76%.
32. Helium at 20 psia, 1 ft^3 and 80EF is heated to 2000EF at constant pressure. It then expands isentropically until the temperature falls to 80EF, is then compressed isothermally to its initial state. Find the heat added, heat removed, work added, work produced, net work produced, and cycle efficiency.
    ANSWER: 32.82 Btu, -13.99 Btu, -13.99 Btu, 32.82 Btu, 18.83 kJ, 57.37%.
33. Carbon dioxide at 20 psia, 1 ft^3 and 80EF is heated to 2000EF at constant pressure. It then expands isentropically until the temperature falls to 80EF, is then compressed isothermally to its initial state. Find the heat added, heat removed, work added, work produced, net work produced, and cycle efficiency.
    ANSWER: 58.58 Btu, -24.97 Btu, -24.97 Btu, 58.58 Btu, 33.60 kJ, 57.37%.

34. A six-process internal combustion engine as shown in Figure E9.10.2a is proposed by a junior engineer. Air mass contained in the cylinder is 0.01 kg. The six processes are:
    Process 1-2 isentropic compression
    Process 2-3 isochoric heating
    Process 3-4 isobaric heating
    Process 4-5 isentropic expansion
    Process 5-6 isobaric cooling
    Process 6-1 isochoric cooling
    The following information is given as shown in Figure E9.10.2b:
    p_1=14.7 psia, T_1=60EF, V_1=8V_2, q_{23}=130 Btu/lbm, q_{34}=170 Btu/lbm, and T_5=750EF.
    Determine the work input, work output, net work output, heat added, heat removed, MEP and cycle efficiency.
    ANSWER: -2.61 Btu, 5.95 Btu, 3.33 Btu, 6 Btu, -2.67 Btu, 62.61 psia, 55.56%.
35. A six-process internal combustion engine as shown in Figure E9.10.2a is proposed by a junior engineer. Air mass contained in the cylinder is 0.02 lbm. The six processes are:
    Process 1-2 isentropic compression
    Process 2-3 isochoric heating
    Process 3-4 isobaric heating
    Process 4-5 isentropic expansion
    Process 5-6 isobaric cooling
    Process 6-1 isochoric cooling
    The following information is given as shown in Figure E9.10.2b:
    p_1=100 kPa, T_1=15EC, V_1=8V_2, q_{23}=300 kJ/kg, q_{34}=400 kJ/kg, and T_5=400EC.
    Determine the pressure and temperature of each state of the cycle, work and heat of each process, work input, work output, net work output, heat added, heat removed, MEP and cycle efficiency.
    ANSWER: [(100 kPa, 15EC), (1838 kPa, 388.8EC), (3000 kPa, 807.4EC), (3000 kPa, 1206EC), (190.7 kPa, 400EC), (190.7 kPa, 276.4EC)], [(-2.68 kJ, 0 kJ), (0 kJ, 3 kJ), (1.14 kJ, 4 kJ), (5.78 kJ, 0 kJ), (-0.3543 kJ, -1.24 kJ), (0 kJ, -1.87 kJ)], -3.03 kJ, 6.92 kJ, 3.89 kJ, 7 kJ, -3.11 kJ, 427.7 kPa, 55.52%.
36. Adding a turbo-charger and a pre-cooler to a Dual cycle is proposed as shown in Figure E9.10.3a. The cylinder volume of the engine is 0.01 m^3. Evaluate the proposed cycle. The basic Dual cycle and the proposed turbo-charger and pre-cooler Dual cycle information are:
    Basic Dual cycle:
    p_1=p_2=p_3=p_8=101 kPa, T_1=T_2=T_3=T_8=15EC, V_3=0.01 m^3, r(compression ratio)=8, and q_{45}=q_{56}=300 kJ/kg.
    Turbo-charger and pre-cooler Dual cycle
    p_1=p_8=101 kPa, T_1=T_8=15EC, p_2=120 kPa, T_3=15EC, V_3=0.01 m^3, r(compression ratio)=10, and q_{45}=q_{56}=300 kJ/kg.
    ANSWER: [Dual cycle--0=59.20%, MEP=482.5 kPa, m=0.0122 kg, Qi=7.34 kJ, Qo=-2.99 kJ, Wi=-3.82 kJ, Wo=8.16 kJ, Wn=4.34 kJ], [Proposed cycle--0=61.78%,

MEP=494.8 kPa, m=0.0145 kg, Qi=8.72 kJ, Qo=-3.33 kJ, Wi=-4.75 kJ, Wo=10.13 kJ, Wn=5.38 kJ].

37. Adding a turbo-charger and a pre-cooler to a Dual cycle is proposed as shown in Figure E9.10.3a. The cylinder volume of the engine is 0.3 ft^3. Evaluate the proposed cycle. The basic Dual cycle and the proposed turbo-charger and pre-cooler Dual cycle information are:
    Basic Dual cycle:
    $p_1=p_2=p_3=p_8=14.7$ psia, $T_1=T_2=T_3=T_8=60$EF, $V_3=0.3$ ft^3, r(compression ratio)=10, and $q_{45}=q_{56}=130$ Btu/lbm.
    Turbo-charger and pre-cooler Dual cycle
    $p_1=p_8=14.7$ psia, $T_1=T_8=60$EF, $p_2=20$ psia, $T_3=60$EF, $V_3=0.3$ ft^3, r(compression ratio)=10, and $q_{45}=q_{56}=130$ Btu/lbm.
38. ANSWER: [Dual cycle--0=59.19%, MEP=70.64 psia, m=0.0229 lbm, Qi=5.96 Btu, Qo=-2.43 Btu, Wi=-3.08 Btu, Wo=6.61 Btu, Wn=3.53 Btu], [Proposed cycle--0=63.48%, MEP=73.59 psia, m=0.0312 lbm, Qi=8.11 Btu, Qo=-2.96 Btu, Wi=-4.55 Btu, Wo=9.70 Btu, Wn=5.15 Btu]].
39. Adding a turbo-charger and a pre-cooler to a Dual cycle is proposed as shown in Figure E9.10.3a. The cylinder volume of the engine is 0.3 ft^3. Evaluate the proposed cycle. The basic Dual cycle and the proposed turbo-charger and pre-cooler Dual cycle information are:
    Basic Dual cycle:
    $p_1=p_2=p_3=p_8=14.7$ psia, $T_1=T_2=T_3=T_8=60$EF, $V_3=0.3$ ft^3, r(compression ratio)=8, and $q_{45}=q_{56}=130$ Btu/lbm.
    Turbo-charger and pre-cooler Dual cycle
    $p_1=p_8=14.7$ psia, $T_1=T_8=60$EF, $p_2=20$ psia, $T_3=60$EF, $V_3=0.3$ ft^3, r(compression ratio)=8, and $q_{45}=q_{56}=130$ Btu/lbm.
    ANSWER: [Dual cycle--0=55.32%, MEP=67.91 psia, m=0.0229 lbm, Qi=5.96 Btu, Qo=-2.66 Btu, Wi=-2.65 Btu, Wo=5.95 Btu, Wn=3.30 Btu], [Proposed cycle--0=60.06%, MEP=71.04 psia, m=0.0312 lbm, Qi=8.11 Btu, Qo=-3.24 Btu, Wi=-3.96 Btu, Wo=8.83 Btu, Wn=4.87 Btu]].

9.11. SUMMARY

Heat engines that use gases as the working fluid in a closed system model were discussed in this chapter. Otto cycle, Diesel, Miller, and Dual cycle are internal combustion engines. Stirling cycle is an external combustion engine.

The Otto cycle is a spark-ignition reciprocating engine made of an isentropic compression process, a constant volume combustion process, an isentropic expansion process, and a constant volume cooling process. The thermal efficiency of the Otto cycle depends on its compression ratio. The compression ratio is defined as $r=V_{max}/V_{min}$. The Otto cycle efficiency is limited by the compression ratio because of the engine knock problem.

The Diesel cycle is a compression-ignition reciprocating engine made of an isentropic compression process, a constant pressure combustion process, an isentropic expansion process, and a constant volume cooling process. The thermal efficiency of the Otto cycle

depends on its compression ratio and cut-off ratio. The compression ratio is defined as $r=V_{max}/V_{min}$. The cut-off ratio is defined as $r_{cutoff}=V_{combustion\ off}/V_{min}$.

The Dual cycle involves two heat addition processes, one at constant volume and one at constant pressure. It behaves more like an actual cycle than either Otto or Diesel cycle.

The Lenoir cycle was the first commercially successful internal combustion engine.

The Stirling cycle and Wicks cycle are attempt to achieve the Carnot efficiency.

The Miller cycle uses variable valve timing for compression ratio control to improve the performance of internal combustion engines.

Chapter 10

GAS OPEN SYSTEM CYCLES

10.1. BRAYTON OR JOULE CYCLE

The *ideal Brayton* (sometimes called Joule cycle) *gas turbine cycle* is named after an American engineer, George Brayton, who proposed the cycle in the 1870s. The gas turbine cycle consists of four processes: an isentropic compression process 1-2, a constant pressure combustion process 2-3, an isentropic expansion process 3-4, and a constant pressure cooling process 4-1. The p-v and T-s diagrams for an ideal Brayton cycle are illustrated in Figure 10.1.1.

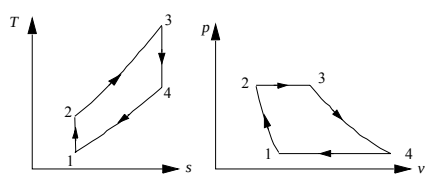

Figure 10.1.1. Brayton cycle p-v and T-s diagrams.

The gas turbine cycle may be either closed or open. The more common cycle is the open one, in which atmospheric air is continuously drawn into the compressor, heat is added to the air by the combustion of fuel in the combustion chamber, and the working fluid expands through the turbine and exhausts to the atmosphere. A schematic diagram of an *open Brayton cycle*, which is assumed to operate steadily as an open system, is shown in Figure 10.1.2.

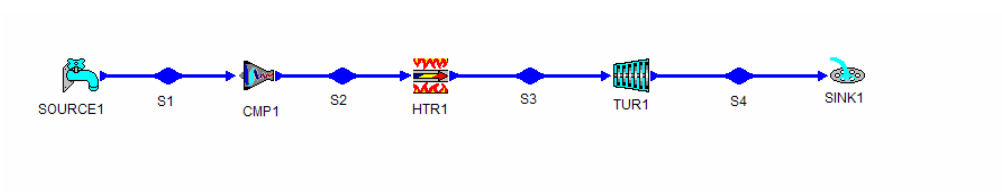

Figure 10.1.2. Open Brayton cycle.

In the closed cycle, the heat is added to the fluid in a heat exchanger from an external heat source, such as nuclear reactor, and the fluid is cooled in another heat exchanger after it leaves the turbine and before it enters the compressor. A schematic diagram of a *closed Brayton cycle* is shown in Figure 10.1.3.

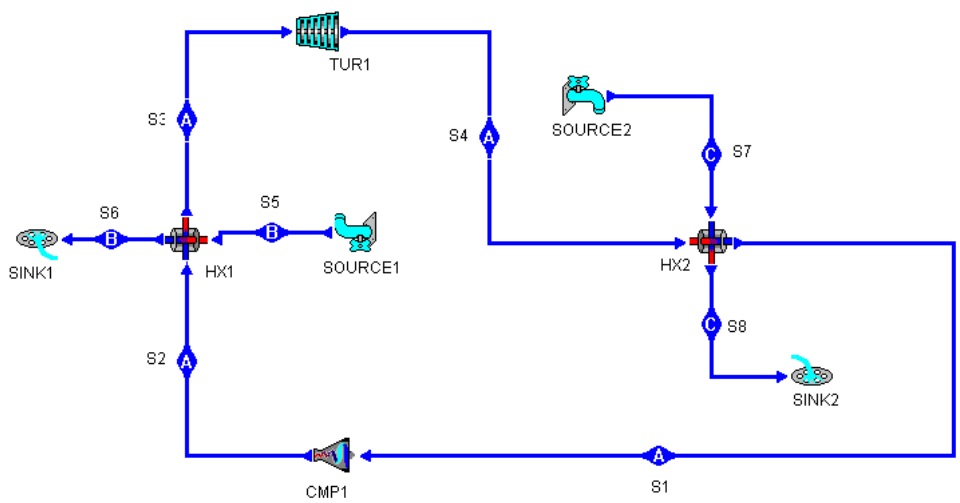

Figure 10.1.3. Closed Brayton cycle.

Applying the First law and Second law of thermodynamics for an open system to each of the four processes of the Brayton cycle yields:

$$Q_{12} = 0 \tag{10.1.1}$$

$$W_{12} = m(h_1 - h_2) \tag{10.1.2}$$

$$W_{23} = 0 \tag{10.1.3}$$

$$Q_{23} - 0 = m(h_3 - h_2) \tag{10.1.4}$$

$$Q_{34} = 0 \tag{10.1.5}$$

$$W_{34} = m(h_3 - h_4) \tag{10.1.6}$$

$$W_{41} = 0 \tag{10.1.7}$$

and

$$Q_{41} - 0 = m(h_1 - h_4) \tag{10.1.8}$$

The net work (W_{net}), which is also equal to net heat (Q_{net}), is

$$W_{net} = W_{12}+W_{34} = Q_{net} = Q_{23} + Q_{41} \quad (10.1.9)$$

The thermal efficiency of the cycle is

$$0 = W_{net} /Q_{23} =Q_{net} /Q_{23} = 1- Q_{41} /Q_{23} =1- (h_4 - h_1)/(h_3 - h_2) \quad (10.1.10)$$

This expression for thermal efficiency of an ideal Brayton cycle can be simplified if air is assumed to be the working fluid with constant specific heats. Equation (10.1.10) is reduced to:

$$0 = 1- (T_4 - T_1)/(T_3 - T_2) = 1-(r_p)^{(k-1)/k} \quad (10.1.11)$$

where r_p is the *pressure compression ratio* for the compressor defined by the equation

$$r_p = p_2 /p_1 \quad (10.1.12)$$

The highest temperature in the cycle occurs at the end of the combustion process (state 3), and it is limited by the maximum temperature that the turbine blade can withstand. The maximum temperature does have an effect on the optimal performance of the gas turbine cycle.

In the gas turbine cycle, the ratio of the compressor work to the turbine work is called *back work ratio*. The back work ratio is very high, usually more than 40 percent.

Example 10.1.1.

An engine operates on the open Brayton cycle and has a compression ratio of eight. Air, at a mass flow rate of 0.1 kg/s, enters the engine at 27EC and 100 kPa. The amount of heat addition is 1000 kJ/kg. Determine the efficiency, compressor power input, turbine power output, back-work-ratio, and net power of the cycle.

To solve this problem by CyclePad, we take the following steps:

1. Build
   (A) Take a compressor, a combustion chamber (heater), a turbine and a cooler from the open system inventory shop and connect the four devices to form the open Brayton cycle.
   (B) Switch to analysis mode.
2. Analysis
   (A) Assume a process for each of the four processes: (a) compressor device as isentropic, (b) combustion chamber and cooler as isobaric, and (c) turbine as isentropic.
   (B) Input the given information: (a) working fluid is air, (b) the inlet pressure and temperature of the compression device are 100 kPa and 27EC, (c) the compression ratio of the compressor is 8, (d) the heat addition is 1000 kJ/kg in

the combustion chamber, (e) mass flow rate of air is 0.1 kg/s, and (f) the exit pressure of the turbine is 100 kPa.

3. Display results
   (A) Display cycle properties results. The cycle is a heat engine. The answers are 0=44.80%, Compressor power=-24.44 kW, Turbine power=69.23 kW, back-work-ratio=35.30%, and Net power=69.23 kW.

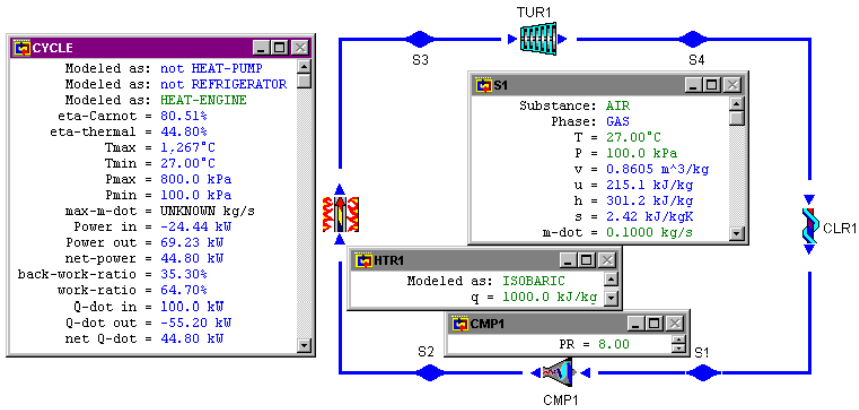

Figure E10.1.1. Open Brayton cycle.

COMMENT: The cycle efficiency increases as compressor ratio increases

For *actual Brayton cycles*, many irreversibilities in various components are present. The T-s diagram of an actual Brayton cycle is shown in Figure 10.1.4. The major irreversibilities occurs within the turbine and compressor. To account for these irreversibility effects, turbine efficiency and compressor efficiency must be used in computing the actual work produced or consumed. The effect of irreversibilities on the thermal efficiency of a Brayton cycle is illustrated in the following example.

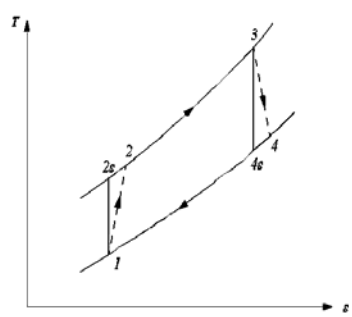

Figure 10.1.4. Actual Brayton cycle T-s diagram.

Example 10.1.2.

An engine operates on an open actual Brayton cycle and has a compression ratio of 8. The air enters the engine at 27EC and 100 kPa. The mass flow rate of air is 0.1 kg/s. The amount of heat addition is 1000 kJ/kg. The compressor efficiency is 86% and the turbine efficiency is 89%. Determine the efficiency and work output per kilogram of air.

To solve this problem by CyclePad, we take the following steps:

1. Build
   (A) Take a source, a compressor, a combustion chamber (heater), a turbine and a sink from the open system inventory shop and connect the five devices to form the open actual Brayton cycle.
   (B) Switch to analysis mode.
2. Analysis
   (A) Assume a process for three of the devics: (a) compressor device as adiabatic, (b) combustion chamber as isobaric, and (c) turbine as adiabatic.
   (B) Input the given information: (a) working fluid is air, (b) the inlet pressure and temperature of the compression device are 100 kPa and 27EC, (c) the compression ratio of the compressor is 8, (d) the heat addition is 1000 kJ/kg in the combustion chamber, (e) the compressor efficiency is 86% and the turbine efficiency is 89%, (f) mass flow rate of air is 0.1 kg/s, and (g) the exit pressure of the turbine is 100 kPa.
3. Display results
   (A) Display the cycle properties results. The cycle is a heat engine. The answers are 0=34.79% and net-power=34.79 kW.

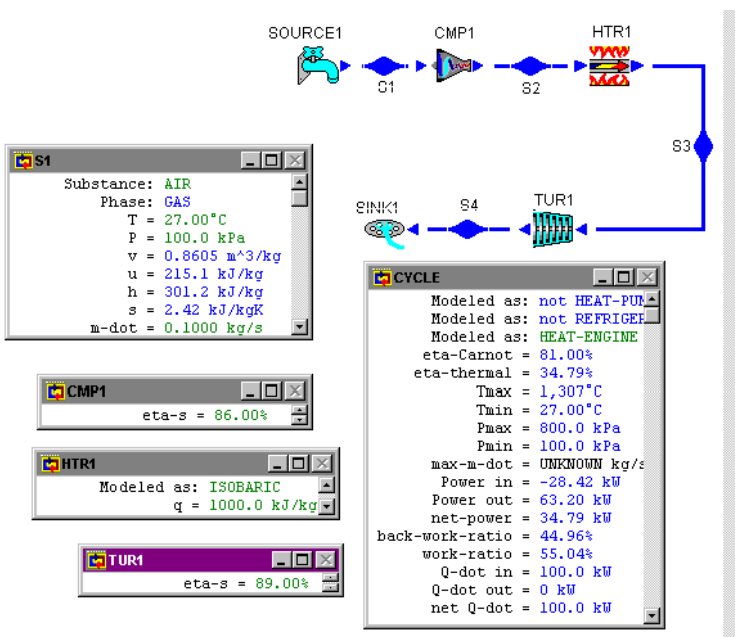

Figure E10.1.2. Open actual Brayton cycle.

Example 10.1.3.

An engine operates on the closed Brayton cycle and has a compression ratio of 8. Helium enters the engine at 47EC and 200 kPa. The mass flow rate of helium is 1.2 kg/s. The amount of heat addition is 1000 kJ/kg. Determine the highest temperature of the cycle, the turbine power produced, the compressor power required, the back work ratio, the rate of heat added, and the cycle efficiency.

To solve this problem by CyclePad, we take the following steps:

1. Build
   (A) Take a compressor, a combustion chamber (heater), a turbine and a cooler from the open system inventory shop and connect the four devices to form the closed Brayton cycle.
   (B) Switch to analysis mode.
2. Analysis
   (A) Assume a process for each of the four processes: (a) compressor device as adiabatic and isentropic, (b) combustion chamber as isobaric, (c) turbine as adiabatic and isentropic, and (d) cooler as isobaric.
   (B) Input the given information: (a) working fluid is helium, (b) the inlet pressure and temperature of the compression device are 200 kPa and 47EC, (c) the compressor exit pressure is 1600 kPa, (d) the mass flow rate of helium is 1.2 kg/s, and (d) the heat addition is 1000 kJ/kg in the combustion chamber.
3. Display results
   (A) Display the cycle properties results. The cycle is a heat engine. The answers are Tmax=657.4EC, Turbine power=3271 kW, Compressor power=-2592 kW, back-work-ratio=79.24%, Qdot in=1200 kW, and 0=56.58%.

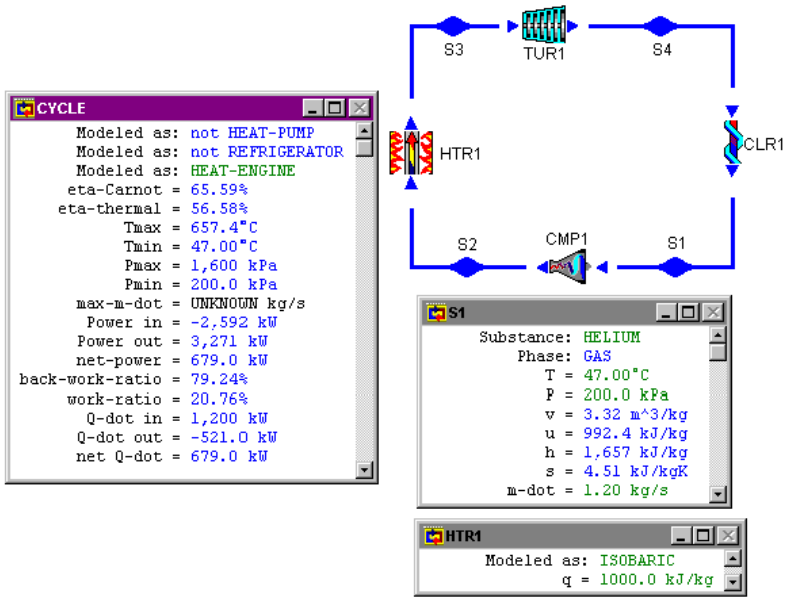

Figure E10.1.3. Closed Brayton cycle.

Homework 10.1. Brayton Cycle

1. Describe the Brayton cycle. What four processes make up the Brayton cycle?
2. How is the compression ratio in the Otto cycle differ from that of the Brayton cycle?
3. How does the Brayton cycle efficiency compare to the Otto cycle efficiency for the same compression ratio?
4. On what single factor does the Brayton cycle efficiency depend?
5. How does the operation of the closed Brayton cycle differ from the open Brayton cycle?
6. What is the back work ratio?
7. Is the back work ratio of the Brayton cycle higher than that of the Rankine cycle? Why?
8. What is the net work of the airplane Brayton cycle?
9. What is the back work ratio of the airplane Brayton cycle?
10. How is the efficiency of the turbine affect the back work ratio of the Brayton cycle?
11. How is the efficiency of the compressor affect the efficiency of the Brayton cycle?
12. The Brayton cycle has the same four processes as the Rankine cycle, but the p-v and T-s diagrams look very different; why is that?
13. The efficiency formula for the Carnot and the Brayton cycles have the same form, yet the Carnot is often referred to as an example of a cycle with the maximum possible thermal efficiency, while the Brayton is not. What is the distinction in this respect?
14. Assume that the minimum and maximum temperatures and the minimum and maximum pressures are fixed for a Brayton cycle. In comparison with an ideal

Brayton cycle, what is the effect of the efficiency of the compressor in the following values:

(A) Heat added per unit of mass? (a) same (b) larger (c) smaller
(B) Work per unit of mass? (a) same (b) larger (c) smaller
(C) Net work per unit of mass? (a) same (b) larger (c) smaller
(D) Heat rejected per unit of mass? (a) same (b) larger (c) smaller
(E) Thermal cycle effiency? (a) same (b) larger (c) smaller

15. Assume that the minimum and maximum temperatures and the minimum and maximum pressures are fixed for a Brayton cycle. In comparison with an ideal Brayton cycle, what is the effect of the efficiency of the turbine in the following values:

(A) Heat added per unit of mass? (a) same (b) larger (c) smaller
(B) Work per unit of mass? (a) same (b) larger (c) smaller
(C) Net work per unit of mass? (a) same (b) larger (c) smaller
(D) Heat rejected per unit of mass? (a) same (b) larger (c) smaller
(E) Thermal cycle effiency? (a) same (b) larger (c) smaller

16. An ideal Brayton cycle uses air as a working fluid. The air enters the compressor at 100 kPa and 37EC. The pressure ratio of the compressor is 12:1, and the temperature of the air as it leaves the turbine is 497EC. Assuming variable specific heats, determine (A) the specific work required to operate the compressor, (B) the specific work produced by the turbine, (C) the heat transfer added to the air in the combustion chamber, and (D) the thermal efficiency of the cycle.

ANSWER: (A) -321.8 kJ/kg, (B) 799.0 kJ/kg, (C) 938.8 kJ/kg, (D) 50.83%.

17. An ideal Brayton engine receives 1 lbm/s of air at 15 psia and 70EF. The maximum cycle temperature is 1300EF and the compressor pressure ratio of the engine is 10. Determine (A) the power added during the compression process, (B) the rate of heat added to the air during the heating process, (C) the power done during the expansion process, and (D) the thermal efficiency of the cycle.

ANSWER: (A) -167.2 hp, (B) 176.7 Btu/s, (C) 287.6 hp, (D) 48.21%.

18. A Brayton engine receives air at 15 psia and 70EF. The air mass rate of flow is 4.08 lbm/s. The discharge pressure of the compressor is 78 psia. The maximum cycle temperature is 1740EF and the air turbine discharge temperature is 1161EF. Determine (A) the power added during the compression process, (B) the rate of heat added to the air during the heating process, (C) the power produced during the expansion process, (D) the turbine efficiency, and (E) the thermal efficiency of the cycle.

ANSWER: (A) -440.9 hp, (B) 1321 Btu/s, (C) 801.0 hp, (D) 70.07%, (E) 19.26%.

19. A Brayton engine receives air at 103 kPa and 27EC. The maximum cycle temperature is 1050EC and the compressor discharge pressure is 1120 kPa. The compressor efficiency is 85% and the turbine efficiency is 82%. Determine (A) the work added during the compression process, (B) the heat added to the air during the heating process, (C) the work done during the expansion process, and (D) the thermal efficiency of the cycle.

ANSWER: (A) -346.3 kJ/kg, (B) 680.2 kJ/kg, (C) 538.1 kJ/kg, (D) 28.20%.

20. An ideal Brayton engine receives air at 15 psia and 80EF. The maximum cycle temperature is 1800EF and the compressor discharge pressure is 225 psia. The mass rate flow of air is 135 lbm/s. Determine (A) the power added during the compression process, (B) the rate of heat added to the air during the heating process, (C) the power produced during the expansion process, (D) the net power produced by the engine, (E) the back work ratio, and (F) the thermal efficiency of the cycle.
    ANSWER: (A) -28851 hp, (B) 35261 Btu/s, (C) 55725 hp, (D) 26874 hp, (E) 51.77%, (E) 53.87%.
21. An ideal Brayton engine receives air at 14.7 psia and 60EF. The maximum cycle temperature is 1750EF and the compressor discharge pressure is 147 psia. The mass rate flow of air is 15 lbm/s. Determine (A) the power added during the compression process, (B) the heat added to the air during the heating process, (C) the power produced during the expansion process, (D) the net power produced by the engine, (E) the back work ratio, and (F) the thermal efficiency of the cycle.
    ANSWER: (A) -2460 hp, (B) 4337 Btu/s, (C) 5418 hp, (D) 2958 hp, (E) 45.41%, (E) 48.21%.
22. A Brayton engine receives air at 14 psia and 70EF. The air mass rate of flow is 16 lbm/s. The compression ratio is 10. The maximum cycle temperature is 1500EF. The compressor efficiency is 79% and the turbine efficiency is 90%. Determine (A) the work done during the compression process, (B) the heat added to the air during the heating process, (C) the work done during the expansion process, (D) the turbine efficiency, and (E) the thermal efficiency of the cycle.
    ANSWER: (A) -149.6 Btu/lbm, (B) 193.2 Btu/s, (C) 203.8 Btu/lbm, (D) 0.7340, (E) 28.06%.
23. A Brayton engine receives air at 100 kPa and 25EC. The maximum cycle temperature is 1082EC and the compressor discharge pressure is 1300 kPa. The compressor efficiency is 87%. The air temperature at the turbine exit is 536EC. Determine (A) the work done during the compression process, (B) the heat added to the air during the heating process, (C) the work done during the expansion process, (D) the turbine efficiency, and (E) the thermal efficiency of the cycle.
    ANSWER: (A) -371.7 kJ/kg, (B) 688.9 kJ/kg, (C) 574.9 kJ/kg, (D) 77.56%, (E) 25.57%.
24. An ideal air Brayton cycle has air enters the compressor at a temperature of 310 K and a pressure of 100 kPa. The pressure ratio across the compressor is 12, and the temperature of the air leaves the turbine at 780 K. Assume variable specific heats, determine (A) the compressor work required, (B) the turbine work produced, (C) the heat added during the combustion, and (D) the thermal efficiency of the cycle.
    ANSWER: (A) -321.6 kJ/kg, (B) 397.9 kJ/kg, (C) 150.0 kJ/kg, (D) 50.83%.
25. Air enters the compressor of an ideal Brayton cycle at 100 kPa and 300 K with a volumetric flow rate of 5 m^3/s. The compressor pressure ratio is 10. The turbine inlet temperature is 1400 K. Determine (A) the thermal efficiency of the cycle, (B) the back work ratio, and (C) the net power developed.
    ANSWER: (A) 48.21%, (B) 41.37%, (C) 2308 kW.
26. Air enters the compressor of a simple gas turbine at 14.7 psia and 520 R, and a volumetric flow rate of 1,000 ft^3/s. The compressor discharge pressure is 260 psia.

The turbine inlet temperature is 2000 F. The turbine efficiency is 87% and the compressor efficiency is 83%. Determine (A) the thermal efficiency of the cycle, (B) the back work ratio, and (C) the net power developed.
ANSWER: (A) 35.11%, (B) 66.52%, (C) 10395 hp.

27. Consider a Brayton cycle in which the air into the compressor is at 100 kPa and 20EC with a mass flow rate of 1 kg/s, and the pressure ratio across the compressor is 12:1. The maximum temperature in the cycle is 1100EC. Determine the power input to the compressor, power produced by the turbine, net power produced by the plant, rate of heat added in the combustion chamber, and the thermal efficiency of the cycle.
ANSWER: -304.1 kW, 700.4 kW, 396.3 kW, 779.6 kW, 50.83%.
28. Consider a Brayton cycle in which the air into the compressor is at 100 kPa and 20EC with a mass flow rate of 1 kg/s, and the pressure ratio across the compressor is 12:1. The maximum temperature in the cycle is 1100EC. The turbine efficiency is 85%. The compressor efficiency is 85%. Determine the power input to the compressor, power produced by the turbine, net power produced by the plant, rate of heat added in the combustion chamber, and the thermal efficiency of the cycle.
ANSWER: -357.8 kW, 595.4 kW, 237.5 kW, 725.9 kW, 32.73%.
29. The minimum temperature in a Brayton cycle is 300 K, and the maximum temperature is 1600 K. The minimum pressure is 100 kPa, and the compressor pressure ratio is 4 to 1. The mass flow rate through the compressor is 1 kg/s.
Determine the power input to the compressor, power produced by the turbine, net power produced by the plant, rate of heat added in the combustion chamber, and the thermal efficiency of the cycle.
ANSWER: -146.3 kW, 525.1 kW, 378.8 kW, 1158 kW, 32.7%.
30. The minimum temperature in a Brayton cycle is 300 K, and the maximum temperature is 1600 K. The minimum pressure is 100 kPa, and the compressor pressure ratio is 4 to 1. The mass flow rate through the compressor is 1 kg/s.
The turbine efficiency is 85%. The compressor efficiency is 85%. Determine the power input to the compressor, power produced by the turbine, net power produced by the plant, rate of heat added in the combustion chamber, and the thermal efficiency of the cycle.
ANSWER: -172.1 kW, 446.3 kW, 274.2 kW, 1132 kW, 24.22%.
31. The maximum and minimum temperatures and pressures of a 40 MW turbine shaft output power ideal air Brayton power plant are 1200K (T_3), 0.38 MPa (P_3) and 290K (T_1), 0.095 MPa (P_1), respectively. Determine the temperature at the exit of the compressor (T_2), the temperature at the exit of the turbine (T_4), the compressor work, the turbine work, the heat added, the mass rate of flow of air, the back work ratio (the ratio of compressor work to the turbine work), and the thermal efficiency of the cycle.
ANSWER: 430.9 K, 807.5 K, -141.4 kJ/kg, 393.8 kJ/kg, 771.7 kJ/kg, 101.6 kg/s, 0.3591, 32.70%.
32. An ideal Brayton cycle with 101 kPa and 300 K at the intake of the compressor is to produce net useful work. By what percentage could the thermal efficiency be

improved if the allowable high temperature at turbine inlet were increased from 1000 K to 1400 K?

An ideal Brayton cycle with 101 kPa and 300 K at the intake of the compressor is to produce the maximum net useful work. The allowable high temperature at turbine inlet is 1400 K. What is the pressure ratio across the compressor at the maximum net useful work condition? What is the compressor work at the maximum net useful work condition?

What is the turbine work at the maximum net useful work condition? What is the heat added at the maximum net useful work condition?

10.2. SPLIT-SHAFT GAS TURBINE CYCLE

Gas turbines can be arranged either in single-shaft or split shaft types. The single-shaft arrangement requires the turbine to provide power to drive both the compressor and the load. This means that the compressor is influenced by the load. The compressor efficiency is a function of the speed. When the load is increased, the compressor speed is slowed down which is not desirable. It is very desirable to make the gas turbine a reliable shaft driven propulsion system, therefore the compressor speed must be held constant. Hence the *split-shaft gas turbines* are developed. In this arrangement, there are two turbines each with its own independent shaft. The sole function of the first turbine is to drive the compressor at a steady speed without being influenced by the load. The net power of the gas turbine is produced by the second turbine as shown by Figure 10.2.1.

Figure 10.2.1. Split-shaft gas turbine.

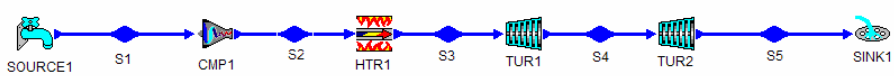

Figure 10.2.1. Split-shaft gas turbine.

Example 10.2.1.

An engine operates on the split-shaft actual open Brayton cycle and has a compression ratio of 8. The air enters the engine at 27EC and 100 kPa. The mass flow rate of air is 0.1 kg/s. The amount of heat addition is 1000 kJ/kg. The compressor efficiency is 86% and the efficiency is 89% for both turbines. Determine the highest temperature of the cycle, the turbine power produced, the compressor power required, the back work ratio, the rate of heat added, the pressure and temperature between the two turbines, and the cycle efficiency.

To solve this problem by CyclePad, we take the following steps:

1. Build
   (A) Take a source, a compressor, a combustion chamber (heater), two turbines and a sink from the open system inventory shop and connect the four devices to form the open actual Brayton cycle.
   (B) Switch to analysis mode.
2. Analysis
   (A) Assume a process for each of the four processes: (a) compressor device as adiabatic and 0=86%, (b) combustion chamber as isobaric, and (c) turbines as adiabatic and 0=89%.
   (B) Input the given information: (a) working fluid is air, (b) the inlet pressure and temperature of the compression device are 100 kPa and 27EC, (c) the compressor exit pressure is 800 kPa, (d) the heat addition is 1000 kJ/kg in the combustion chamber, (e) mass flow rate of air is 0.1 kg/s, (f) Display the compressor and find the power required to run the compressor, the finding is -28.42 kW, (g) input the first turbine power (which is used to operate the compressor) 28.42 kW, and (h) the exit pressure of the turbine is 100 kPa.
3. Display results
   (A) Display the cycle properties results. The cycle is a heat engine. The answers are Tmax=1307EC, first turbine power=28.42 kW, second turbine power=35.75 kW, compressor power=-28.42 kW, back-work-ratio=44.28%, Qdot in=100 kW, the pressure and temperature between the two turbines are 364.1 kPa and 1024EC, and 0=35.75%.

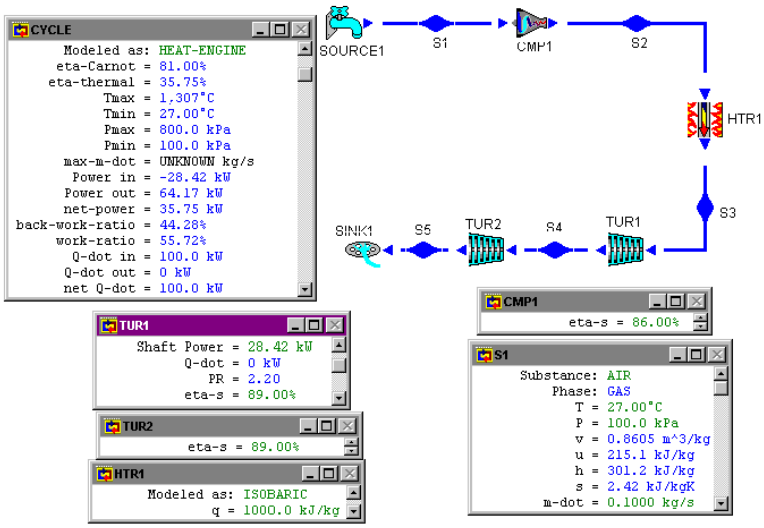

Figure E10.2.1. Split-shaft open Brayton cycle.

Homework 10.2. Split-Shaft Gas Turbine Cycle

1. Why do we need a split shaft gas turbine engine?

2. What is the function of each turbine in a split shaft gas turbine engine?
3. An ideal split shaft Brayton cycle receives air at 14.7 psia and 70EF. The upper pressure and temperature limits of the cycle are 60 psia and 1500EF, respectively. Find the temperature and pressure of all states of the cycle. Find the input compressor work, the output power turbine work, heat supplied in the combustion chamber, and the thermal efficiency of the cycle.
   ANSWER: p_1=14.7 psia, T_1=70EF, p_2=60 psia, T_2=332EF, p_3=60 psia, T_3=1500EF, p_4=36.35 psia, T_4=1239EF, p_5=14.7 psia, T_5=857.5EF, input compressor work=-88.83 Btu/lbm, the output power turbine work=219.9 Btu/lbm, heat supplied in the combustion chamber=280.0 Btu/lbm, and the thermal efficiency of the cycle=33.09%.
4. An actual split shaft Brayton cycle receives air at 14.7 psia and 70EF. The upper pressure and temperature limits of the cycle are 60 psia and 1500EF, respectively. The turbine efficiency is 85% for both turbines. The compressor efficiency is 80%. Find the temperature and pressure of all states of the cycle. The mass flow rate of air is 1 lbm/s. Calculate the input compressor power, the output power turbine power, rate of heat supplied in the combustion chamber, and the thermal efficiency of the cycle, based on variable specific heats.
   ANSWER: p_2=60 psia, T_2=397.5EF, p_3=60 psia, T_3=1500EF, p_5=14.7 psia, T_5=940.6EF, $Wdot_c$=-111.0 hp, $Wdot_{t1}$=111.0 hp, $Wdot_{t2}$=78.7 hp, $Qdot_s$=264.3 Btu/s, 0=21.04%.
5. The following are operating characteristics of a split-shaft gas turbine:
   Atmospheric conditions– p=14.7 psia, T=60EF
   Compressor– inlet pressure=14.5 psia, inlet temperature=60EF, mdot=1 lbm/s, 0=0.8, exit pressure=101.5 psia
   Combustion chamber-- exit temperature=1800EF, exit pressure=99 psia
   Turbine #1--0=0.85
   Power Turbine #2--0=0.85, exit pressure=14.9 psia
   Find the temperatures of all states of the cycle, power required by the compressor, power produced by the Turbine #1, power produced by the Power Turbine #2, rate of heat transfer supplied in the combustion chamber, cycle efficiency, and power output.
   ANSWER: $T_{compressor\ exit}$=543.1EF, $T_{turbine\ \#1\ exit}$=1317EF, $T_{power\ turbine\ \#2\ exit}$=981.3EF, $Power_{compressor}$=-163.8 hp, $Power_{turbine\ \#1}$=163.8 hp, $Power_{power\ turbine\ \#2}$=-113.8 hp, $Qdot_{combustion\ chamber}$=301.2 Btu/s, 0=26.71%, power output=113.8 hp.
6. A split shaft Brayton gas turbine operates with the following information:
   inlet compressor temperature=70EF=T_1
   inlet compressor pressure=14.5 psia=p_1
   inlet combustion chamber pressure=145 psia=p_2
   inlet ggt (gas generator turbine) temperature=2000EF=T_3
   exit pt (power turbine) pressure=14.8 psia=p_{5a}
   air mass rate of flow=2 lbm/s
   power turbine efficiency=85%
   gas generator turbine efficiency=100%

compressor efficiency=100%
Draw the T-s diagram of the cycle.
Find the temperature at the exit of the compressor (T_2), the temperature at the exit of the gas generator turbine (T_4), the temperature at the exit of the power turbine (T_{5a}), compressor work required per unit mass, gas generator turbine work produced per unit mass, power turbine work produced per unit mass, heat supplied per unit mass, net work produced per unit mass, total power produced by the cycle, and cycle efficiency.
ANSWER: T_2=563.0EF, T_4=1516EF, T_{4a}=1507EF, w_c=-118.1 Btu/lbm, q_s=344.0 Btu/lbm, w_{t1}=118.1 Btu/lbm, w_{t2}=143.7 Btu/lbm, w_{net}=143.7 Btu/lbm, P_{net}=287.4 Btu/s=740.9 hp, 0=41.72%.

7. A split shaft Brayton gas turbine operates with the following information:
inlet compressor temperature=60EF=T_1
inlet compressor pressure=14.5 psia=p_1
inlet combustion chamber pressure=145 psia=p_2
inlet ggt (gas generator turbine) temperature=2000EF=T_3
exit pt (power turbine) pressure=14.8 psia=p_{5a}
air mass rate of flow=2 lbm/s
power turbine efficiency=85%
gas generator turbine efficiency=100%
compressor efficiency=100%
Draw the T-s diagram of the cycle.
Find the temperature at the exit of the compressor (T_2), the temperature at the exit of the gas generator turbine (T_4), the temperature at the exit of the power turbine (T_{5a}), compressor work required per unit mass, gas generator turbine work produced per unit mass, power turbine work produced per unit mass, heat supplied per unit mass, net work produced per unit mass, total power produced by the cycle, and cycle efficiency.
ANSWER: T_2=543.7EF, T_4=1516EF, T_{5a}=926EF, w_c=-115.9 Btu/lbm, q_s=349.0 Btu/lbm, w_{t1}=115.9 Btu/lbm, w_{t2}=141.5 Btu/lbm, w_{net}=141.5 Btu/lbm, P_{net}=283.0 Btu/s=400.4 hp, 0=40.54%.

10.3. IMPROVEMENTS TO BRAYTON CYCLE

The thermal efficiency or net work of the Brayton cycle can be improved by several modifications to the basic cycle. These modifications include increasing the turbine inlet temperature, reheating, inter-cooling, regeneration, etc.

Increasing the turbine inlet temperature increases the thermal efficiency of the Brayton cycle. It is limited by the metallurgical material problem in the turbine blade.

Increasing the average temperature during the heat addition process with a re-heater without increasing the compressor pressure ratio increases the net work of the Brayton cycle. A multi-stage turbine is used. Gas is reheated between stages.

Using an inter-cooler without increasing the compressor pressure ratio increases the net work of the Brayton cycle. A multi-stage compressor is used. Gas is cooled between stages.

Increasing the average temperature during the heat addition process can also be done by regenerating the gas. A multi-stage turbine is used. The exhaust gas is used to preheat the air before it is heated in the combustion chamber. In this way, the amount of heat added at the low temperature is reduced. So the average temperature during the heat addition process is increased.

Homework 10.3. Improvements to Brayton Cycle

1. Consider a simple ideal Brayton cycle with fixed turbine inlet temperature and fixed compressor inlet temperature. What is the effect of the pressure ratio on the cycle efficiency?
2. Consider a simple ideal Brayton cycle with fixed maximum temperature and fixed minimum temperature. What is the effect of reheating the gas on the cycle net work?
3. Consider a simple ideal Brayton cycle with fixed maximum temperature and fixed minimum temperature. What is the effect of intercooling the gas on the cycle net work?

10.4. Reheat and Inter-Cool Brayton Cycle

Methods for improving the gas turbine cycle performance are available.

Two ways to improve the cycle net work are to reduce the compressor work and to increase the turbine work. The inter-cool may be accomplished by compressing in stages with an inter-cooler, cooling the air as it passes from one stage to another. Similarly, the reheat may be accomplished by the expansion in stages with a re-heater. Since there is more than sufficient air for combustion, some more can be injected. The reheated products of combustion return to the turbine. The products of combustion reentering the turbine are usually at the same temperature as those entering the turbine. The schematic diagram of a reheat open Brayton cycle is illustrated in Figure 10.4.1. The schematic diagram and T-s diagram for a *reheat and inter-cool gas turbine* cycle is illustrated in Figure 10.4.2 and Figure 10.4.3, respectively.

Notice that reheat and inter-cool increase the net work of the gas turbine cycle, but not necessarily the efficiency, unless a regenerator is also added.

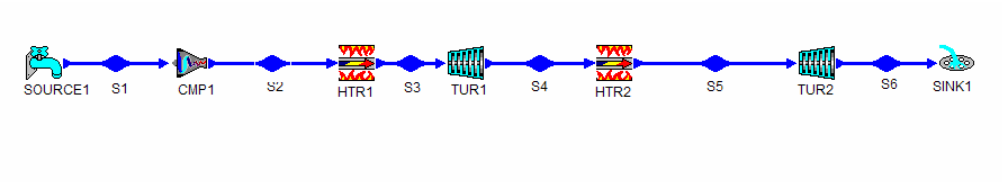

Figure 10.4.1. Reheat Brayton cycle.

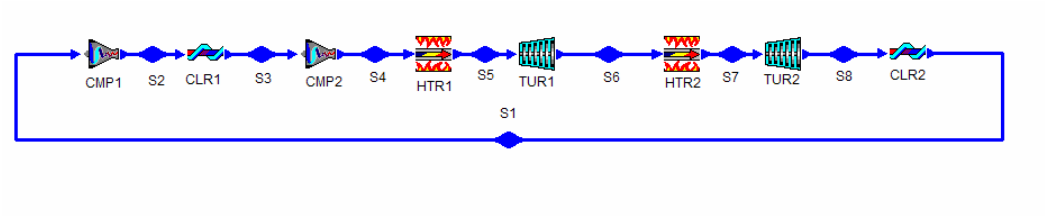

Figure 10.4.2. Reheat and inter-cool Brayton cycle.

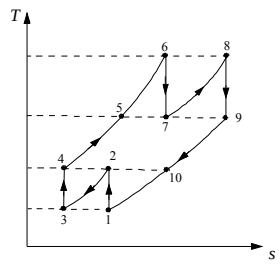

Figure 10.4.3. Reheat and inter-cool Brayton cycle T-s diagram.

Example 10.4.1.

An engine operates on an ideal reheat and inter-cooling Brayton cycle. The low-pressure compressor has a compression ratio of 2, and the high-pressure compressor has a compression ratio of 4. The air enters the engine at 27EC and 100 kPa. The air is cooled to 27EC at the inlet of the high-pressure compressor. The heat added in the combustion chamber is 1000 kJ/kg and air is heated to the maximum temperature of the cycle. The mass flow rate of air is 0.1 kg/s. Air expands to 200 kPa through the first turbine. Air is heated again by the re-heater to the maximum temperature of the cycle and then expanded through the second turbine to 100 kPa. Determine the power required for the first compressor, the power required for the second compressor, the maximum temperature of the cycle (at the exit of the combustion chamber), the power produced by the first turbine, the rate of heat added in the re-heater, the power produced by the second turbine, the net power produced, back work ratio, and the efficiency of the cycle. Show the cycle on T-s diagram.

To solve this problem by CyclePad, we take the following steps:

1. Build
   (A) Take two compressors, two coolers (one is the inter-cooler), two combustion chambers (one is the re-heater), and two turbines from the open system inventory shop and connect the devices to form the reheat and inter-cooling Brayton cycle.
   (B) Switch to analysis mode.
2. Analysis
   (A) Assume a process for each of the eight processes: (a) compressors as adiabatic and compressor efficiency is 86%, (b) combustion chamber as isobaric, (c)

turbines as adiabatic, and both turbine efficiency is 89%, (d) inter-cooler as isobaric, (e) re-heater as isobaric.

(B) Input the given information: (a) working fluid is air, (b) the inlet temperature and pressure of the compressor are 27EC and 100 kPa, (c) the inlet temperature and pressure of the high-pressure compressor are 27EC and 200 kPa, (d) the heat added in the combustion chamber is 1000 kJ/kg,, (e) the inlet pressure of the re-heater is 200 kPa, (f) display the exit temperature of the combustion chamber (maximum temperature of cycle), (g) input the exit temperature of the re-heater (same as the exit temperature of the combustion chamber as found in part f), (h) the mass flow rate of air is 0.1 kg/s, and (i) the exit pressure of the low-pressure turbine is 100 kPa.

3. Display results

(A) Display the T-s diagram and cycle properties results. The cycle is a heat engine. The answers are power required for the first compressor=-6.60 kW, the power required for the second compressor=-14.64 kW, the maximum temperature of the cycle =1169EC, the power produced by the first turbine=47.34 kW, the rate of heat added in the re-heater=47.29 kW, the power produced by the second turbine=26.00 kW, the net power produced=52.11 kW, back work ratio=28.95%, and the efficiency of the cycle 0=35.38%.

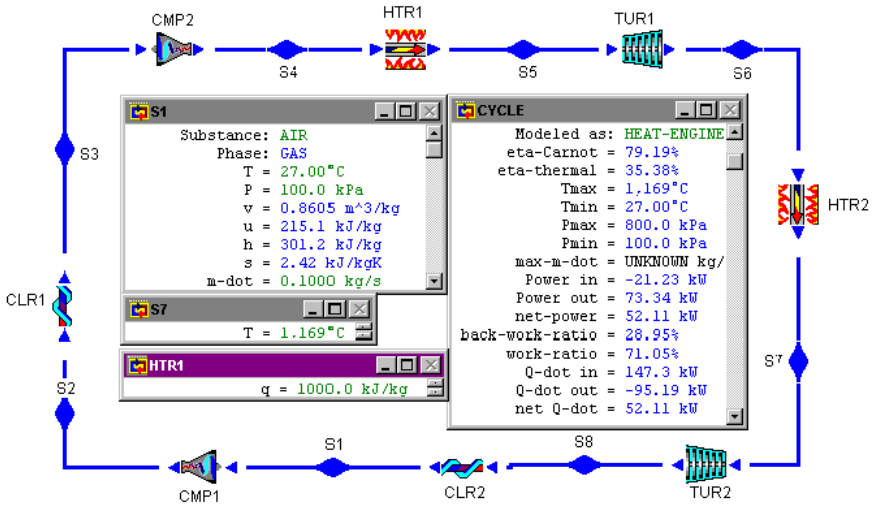

Figure E10.4.1. Ideal reheat and inter-cool Brayton cycle.

Comment: Comparing with Example 10.1.1, we see that: (1) the efficiency of the reheat and intercooler cycle does not increase, and (2) the net power of the reheat and intercooler cycle does increase.

Example 10.4.2.

An engine operates on an actual reheat open Brayton cycle. The air enters the compressor at 60EF and 14.7 psia, and leaves at 120 psia. The maximum cycle temperature (at the exit of the combustion chamber) allowed due to material limitation is 2000EF. The exit pressure of the high-pressure turbine is 50 psia. The air is reheated to 2000EF. The mass flow rate of air is 1 lbm/s. The exit pressure of the low-pressure turbine is 14.7 psia. The compressor efficiency is 86% and the turbine efficiency is 89%. Determine the power required for the compressor, the power produced by the first turbine, the rate of heat added in the re-heater, the power produced by the second turbine, the net power produced, back work ratio, and the efficiency of the cycle. Show the cycle on T-s diagram.

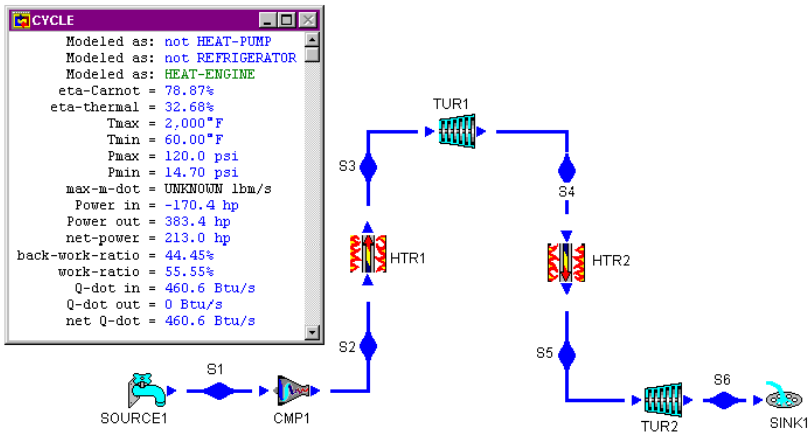

Figure E10.4.2a. Actual reheat open Brayton cycle.

To solve this problem by CyclePad, we take the following steps:

1. Build
   (A) Take a source, a compressors, a combustion chamber (heater), a reheater, two turbines and a sink from the open system inventory shop and connect the seven devices to form the actual reheat open Brayton cycle.
   (B) Switch to analysis mode.
2. Analysis
   (A) Assume a process for each of the five processes: (a) compressor as adiabatic with 85% efficiency, (b) combustion chamber as isobaric, (c) turbines as adiabatic with 89% efficiency, and (d) re-heater as isobaric.
   (B) Input the given information: (a) working fluid is air, (b) the inlet pressure and temperature of the compression device are 15 psia and 60EF, (c) the exit pressure of the compressor is 120 psia, (d) the exit temperature of the combustion chamber is 2000EF, (e) the exit pressure of the high-pressure turbine is 50 psia, (f) the inlet temperature of the low-pressure turbine is 2000EF, (g) the mass flow rate of air is 1 lbm/s, and (h) the exit pressure of the turbine is 15 psia.

3. Display results
   Display the cycle properties results. The cycle is a heat engine. The answers are power required for the compressor=-170.4 hp, the power produced by the first turbine=164.3 hp, the rate of heat added in the combustion chamber=334.5 Btu/s, the rate of heat added in the re-heater=116.1 Btu/s, the power produced by the second turbine=219.1 hp, the net power produced=213.0 hp, back work ratio=44.45%, and the efficiency of the cycle 0=32.68%.

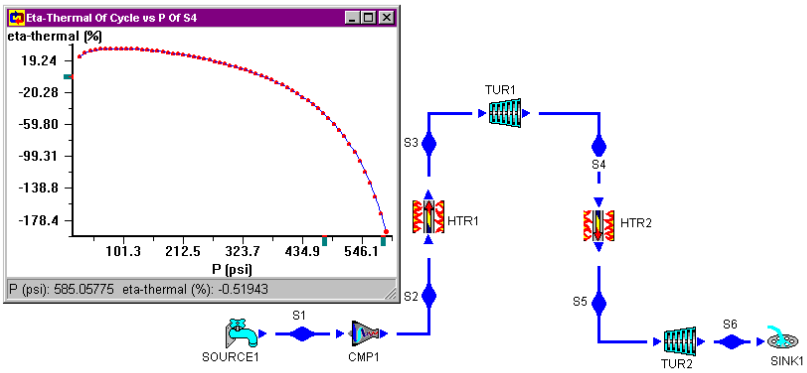

Figure E10.4.2b. Actual reheat open Brayton cycle sensitivity analysis.

Homework 10.4. Reheat and Inter-Cool Brayton Cycle

1. Does reheat or inter-cooling increase the net work of the Brayton cycle?
2. Does reheat or inter-cooling increase the efficiency of the Brayton cycle?
3. Do the inlet pressure and inlet temperature have any influence on the efficiency of the Brayton cycle?
4. Why do you add a reheater between the turbine stages? Why do you add an intercooler between the compressor stages?
5. An ideal Brayton cycle is modified to incorporate multi-stage compression with inter-cooling. Does the compressor work increase?
6. An ideal Brayton cycle is modified to incorporate multi-stage expansion with reheat. Does the turbine work increase?
7. An ideal Brayton cycle is modified to incorporate multi-stage compression with inter-cooling, and multi-stage expansion with reheating. As a result of these modifications, does the back work ratio increase?
8. An ideal Brayton cycle is modified to incorporate multi-stage compression with inter-cooling, and multi-stage expansion with reheating. As a result of these modifications, does the efficiency increase?
9. An ideal Brayton cycle is modified to incorporate multi-stage compression with inter-cooling, and multi-stage expansion with reheating. As a result of these modifications, does the net work increase?

10. In an ideal Brayton cycle with many number multi-stage compression with inter-cooling, and multi-stage expansion with reheating. As a result of these modifications, does the efficiency of the cycle approach to 100%?
11. Atmospheric air is at 100 kPa and 300 K. 1 kg/s of air at 800 kPa and 1200 K enters an actual two-stage (high-pressure stage and low-pressure stage) adiabatic turbine at steady state and exits to 100 kPa. Air is reheated to 1200 K and enters the low-pressure turbine. Air pressure at 300.1 kPa is measured at the exit of the high-pressure stage turbine. The high-pressure stage turbine, low-pressure stage turbine, and the compressor all are known to have an isentropic efficiency of 85%. Determine (A) the actual temperature at the exit of the high-pressure stage turbine, (B) the actual temperature at the exit of the low-pressure stage turbine, (C) the cycle efficiency, (D) net power produced by the cycle, (E) power required by the compressor, (F) power produced by the high-pressure turbine, (G) power produced by the low-pressure turbine, (H) the back work ratio, (I) the rate of heat added in the combustion chamber, and (J) the rate of heat added in the reheater.
    ANSWER: (A) 950.8 K, (B) 925.1 K, (C) 27.55%, (D) 238.5 kW, (E) -287.4 kW, (F) 250.1 kW, (G) 275.8 kW, (H) 0.5465, (I) 615.7 kW, and (J) 250.1 kW.
12. An ideal Brayton cycle with a one-stage compressor and a two-stage turbine has an overall pressure ratio of 10. Atmospheric air is at 101 kPa and 292 K. The high-pressure stage turbine, low-pressure stage turbine, and the compressor all are known to have an isentropic efficiency of 85%. Air enters each stage of the turbine at 1350 K. The mass rate of air flow is 0.56 kg/s. The air pressure at the inlet of the second stage turbine is 307 kPa. Determine (A) the power required by the compressor, (B) power produced by the turbine, (C) rate of heat added, (D) back work ratio, (E) net power produced, and (F) the cycle efficiency.
    ANSWER: (A) -179.7 kW, (B) 361.4 kW, (C) 600.8 kW, (D) 0.4971, (E) 181.8 kW, and (F) 30.26%.
13. An ideal Brayton cycle with a one-stage compressor and a two-stage turbine has an overall pressure ratio of 10. Atmospheric air is at 101 kPa and 292 K. The high-pressure stage turbine, low-pressure stage turbine, and the compressor all are known to have an isentropic efficiency of 85%. Air enters each stage of the turbine at 1350 K. The mass rate of air flow is 0.56 kg/s. Use air pressure at the inlet of the second stage turbine as a parameter (from 400 to 800 kPa), determine (A) the maximum cycle efficiency by showing the sensitivity diagram, (B) the optimum air pressure at the inlet of the second stage turbine at the maximum cycle efficiency condition, (C) power required by the compressor, (D) power produced by the turbine, (E) rate of heat added, (F) back work ratio, and (G) net power produced.
    ANSWER: (A) 33.12%, (B) 643 kPa, (C) -179.7 kW, (D) 342.7 kW, (E) 492.7 kW, (F) 0.5240, and (G) 163.2 kW.
14. An ideal Brayton cycle with a one-stage compressor and a two-stage turbine has an overall pressure ratio of 10. Atmospheric air is at 14.6 psia and 65 F. The high-pressure stage turbine, low-pressure stage turbine, and the compressor all are known to have an isentropic efficiency of 85%. Air enters each stage of the turbine at 2000 F. The mass rate of air flow is 1.5 lbm/s. The air pressure at the inlet of the second stage turbine is 50 psia. Determine (A) the power required by the compressor, (B)

power produced by the turbine, (C) rate of heat added, (D) back work ratio, (E) net power produced, and (F) the cycle efficiency.
ANSWER: (A) -856.4 hp, (B) 1015 hp, (C) 503 Btu/s, (D) 0.8439, (E) 158.3 hp, and (F) 22.25%.

10.5. REGENERATIVE BRAYTON CYCLE

The thermal efficiency of the gas turbine cycle is not high. It is observed that the exhaust temperature of the turbine is quite high, indicating that a large portion of available energy is wasted. One way to put this high-temperature available energy to use is to preheat the combustion air before it enters the combustion chamber. This increases the overall efficiency by decreasing the fuel required. The schematic diagram and T-s diagram for an ideal *regenerative gas turbine cycle* is illustrated in Figure 10.5.1 and Figure 10.5.2, respectively.

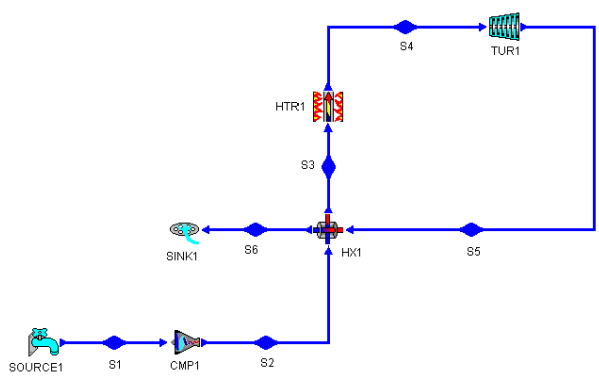

Figure 10.5.1. Regenerative Brayton cycle.

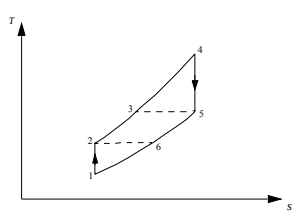

Figure 10.5.2. Regenerative Brayton cycle T-s diagram.

Example 10.5.1.

An engine operates on the actual regenerative Brayton cycle. Air enters the engine at 60EF and 14.7 psia. The maximum cycle temperature and the maximum pressure are 2000EF

and 120 psia. The compressor efficiency is 85% and the turbine efficiency is 89%. The mass flow rate of air is 1 lbm/s. Determine the power required for the compressor, the power produced by the turbine, the rate of heat added in the combustion chamber, the net power produced, back work ratio, and the efficiency of the cycle. Plot the sensitivity diagram of cycle efficiency vs exit temperature of the turbine exhaust stream in the heat exchanger.

To solve this problem by CyclePad, we take the following steps:

1. Build
   (A) Take a source, a compressor, a combustion chamber (heater), a heat exchanger, a turbine and a sink from the open system inventory shop and connect the six devices to form the actual regenerative Brayton cycle.
   (B) Switch to analysis mode.
2. Analysis
   (A) Assume a process for each of the four devices: (a) compressor as adiabatic with efficiency of 85%, (b) combustion chamber as isobaric, (c) turbine as adiabatic with efficiency of 89%, and (d) heat exchanger as isobaric on both hot and cold sides.
   (B) Input the given information: (a) working fluid is air, (b) the inlet pressure and temperature of the compression device are 14.7 psia and 60EF, (c) the inlet pressure and temperature of the turbine are 120 psia and 2000EF, (d) the mass flow rate of air is 1 lbm/s, (e) the exit pressure of the turbine is 14.7 psia, (f) display the exit temperature of the compressor, it is 562.5EF, and (g) input the exit temperature of the exhaust turbine gas be the same as the compressor exit temperature, 562.5EF, by assuming perfect regeneration.
3. Display results
   Display the cycle properties results. The cycle is a heat engine. The answers are power required for the compressor=-170.4 hp, the power produced by the turbine=334.9 hp, the rate of heat added in the combustion chamber=236.7 Btu/s, the net power produced=164.5 hp, back work ratio=50.88%, and the efficiency of the cycle 0=49.12%.

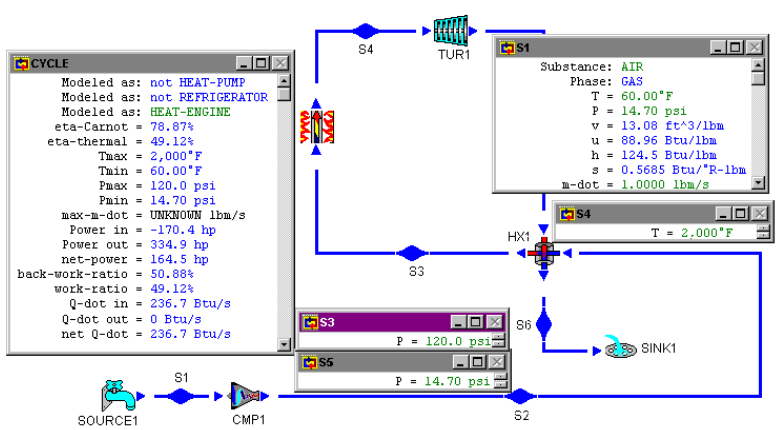

Figure E10.5.1a. Actual regenerative Brayton cycle.

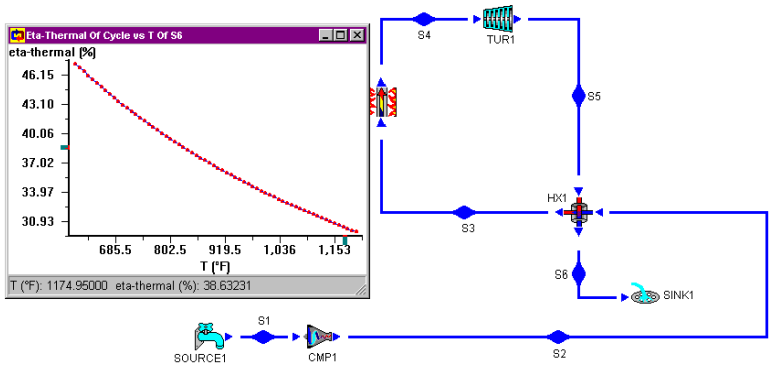

Figure E10.5.1b. Actual Regenerative Brayton cycle sensitive analysis.

Comment: The cycle efficiency is increased because the rate of heat added is decreased by making use of the waste energy. The higher the exit temperature of the heat exchanger in the exhaust turbine gas stream, the less waste energy is used, and therefore the less the efficiency as shown by the sensitivity diagram.

Homework 10.5. Regenerative Brayton Cycle.

1. What is regeneration?
2. Why is regeneration added to a Brayton cycle?
3. How does regeneration affect the efficiency of the Brayton cycle?
4. In a regenerator, can the air leaving the compressor heated to a temperature above that of the turbine exit?
5. In an ideal Brayton cycle with many number multi-stage compression with inter-cooling, many number multi-stage expansion with reheating, and regeneration. As a result of these modifications, does the efficiency of the cycle approach to the efficiency of the Carnot cycle?
6. An ideal Brayton cycle is modified to incorporate multi-stage compression with inter-cooling, multi-stage expansion with reheating, and regeneration. As a result of these modifications, does the efficiency increase?
7. An ideal regenerative Brayton cycle with perfect regeneration has the thermal efficiency expression, $0=1-(T_L/T_H)(p_H/p_L)^{(k-1)/k}$. Let T_L=300 K, T_H=1300 K, and p_H/p_L=6. Calculate the thermal efficiency of the cycle.
8. Referring to the last homework problem, is regeneration theoretically possible at p_H/p_L=15?
9. Referring to the last homework problem, at what pressure ratio does regenerator become useless?
10. A regenerative gas-turbine power plant is to be designed according to the following specifications:
    Maximum cycle temperature=1200 K
    Turbine efficiency=85%
    Compressor efficiency=82%

Inlet air temperature of the combustion chamber is 20 K higher than the exit air temperature of the compressor.
Inlet air pressure to the compressor=100 kPa
Turbine exit air pressure=110 kPa
Exit air pressure of the compressor=800 kPa
Mass flow rate of air=1.4 kg/s
Determine (A) the exit air temperature of the compressor, (B) the inlet air temperature of the combustion chamber, (C) the power required by the compressor, (D) power produced by the turbine, (E) rate of heat added, (F) back work ratio, (G) net power produced, and (H) the cycle efficiency.
ANSWER: (A) 577 K, (B) 597 K, (C) -403.1 hp, (D) 634.2 hp, (E) 847.1 Btu/s, (F) 0.6356, (G) 231.1 hp, and (H) 27.28%.

11. An ideal Brayton cycle with regeneration has a pressure ratio of 10. Air enters the compressor at 14.7 psia and 29EF. Air enters the combustion chamber at 610EF. Air enters the turbine at 1520EF. The turbine exit air pressure is 15.0 psia. The air mass flow rate is 0.41 lbm/s. The turbine efficiency is 85%, and the compressor efficiency is 82%. Determine (A) the exit air temperature of the compressor, (B) the inlet air temperature of the combustion chamber, (C) the power required by the compressor, (D) power produced by the turbine, (E) rate of heat added, (F) back work ratio, (G) net power produced, and (H) the cycle efficiency.
ANSWER: (A) 583.6 F, (B) 610 F, (C) -77.11 hp, (D) 112.1 hp, (E) 89.42 Btu/s, (F) 0.6880, (G) 34.96 hp, and (H) 27.63%.
12. An ideal Brayton cycle with regeneration has a pressure ratio of 10. Air enters the compressor at 101 kPa and 290 K. Air leaves the regenerator and enters the combustion chamber at 580 K. Air enters the turbine at 1220 K. The air mass flow rate is 0.46 kg/s. Determine (A) the power required by the compressor, (B) power produced by the turbine, (C) rate of heat added, (D) back work ratio, (E) net power produced, and (F) the cycle efficiency.
ANSWER: (A) -124.6 kW, (B) 271.5 kW, (C) 295.4 kW, (D) 0.4589, (E) 146.9 kW, and (F) 49.72%.

10.6. BLEED AIR BRAYTON CYCLE

Real gas turbine engines send a portion of the air supplied by the compressor through alternative flow paths to provide cooling to the outside of the engine, to protect nearby components, to be re-mixed with the combustion products, and to drive ancillary equipments such as air conditioning and ventilation. The rate of the bleed air can be controlled. The schematic diagram for the *bleed air Brayton cycle* is illustrated in Figure 10.6.1. It can be seen from the diagram that the engine's entire flow rate passes through the compressor, but only a fraction of the flow passes through the combustion chamber and the turbine.

Bleed air is a necessary feature of practical gas turbine engines. For example, when one enters a commercial aircraft, the cabin temperature is normally pleasant and the small vents above the seats are providing plenty of fresh air. The ventilation reduces dramatically as the aircraft prepares to take off, because the pilot has temporarily reduced the bleed air so that

more air will flow through the combustion chamber to give the pilot more power available to get airborne. Bleed air does not improve the efficiency of the Brayton cycle.

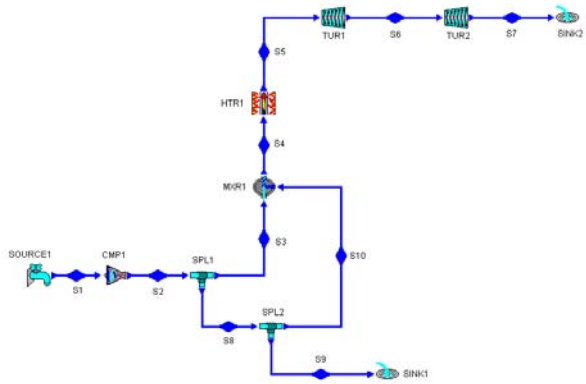

Figure 10.6.1. Bleed air Brayton cycle.

Example 10.6.1.

An open, split-shaft, bleed air Brayton cycle illustrated in Figure 10.6.1 has the following information:

Compressor efficiency=80%, turbine efficiency=80%, compressor inlet pressure=14.5 psia, compressor inlet temperature=60EF, compressor exit pressure=145 psia, combustion chamber exit temperature=1800EF, power turbine exit pressure=14.9 psia, air mass flow rate through compressor=1 lbm/s, and air mass flow rate through combustion chamber=0.9 lbm/s.

Find the temperature of all states, power required by the compressor, power produced by turbine #1 which drives the compressor, power produced by the power turbine, rate of heat supplied by the combustion chamber, and cycle efficiency.

To solve this problem by CyclePad, we take the following steps:

(A) Build the cycle as shown by Figure 10.6.1
(B) Assume compressor as adiabatic and 80% efficient, combustion chamber and mixing chamber as isobaric, and turbines as adiabatic and 80% efficient.
(C) Input working fluid is air, compressor inlet pressure=14.5 psia, compressor inlet temperature=60EF, compressor exit pressure=145 psia, combustion chamber exit temperature=1800EF, power turbine exit pressure=14.9 psia, air mass flow rate through compressor=1 lbm/s, air mass flow rate through state 9=0 lbm/s, and air mass flow rate through combustion chamber=0.9 lbm/s.
(D) Display compressor power (-205 hp), input turbine #1 power=205 hp.
(E) Display the cycle properties results and state results. The answers are T_2=664.6EF, T_3=T_4=T_8=T_9=T_{10}= 664.6EF, T_6=1128EF, T_7=913.1EF, compressor power=-205 hp, turbine #1 power=205 hp, turbine #2 power=65.66 hp, rate of heat added in the

combustion chamber=244.9 Btu/s, net cycle power=65.66 hp, and cycle efficiency=18.95%.

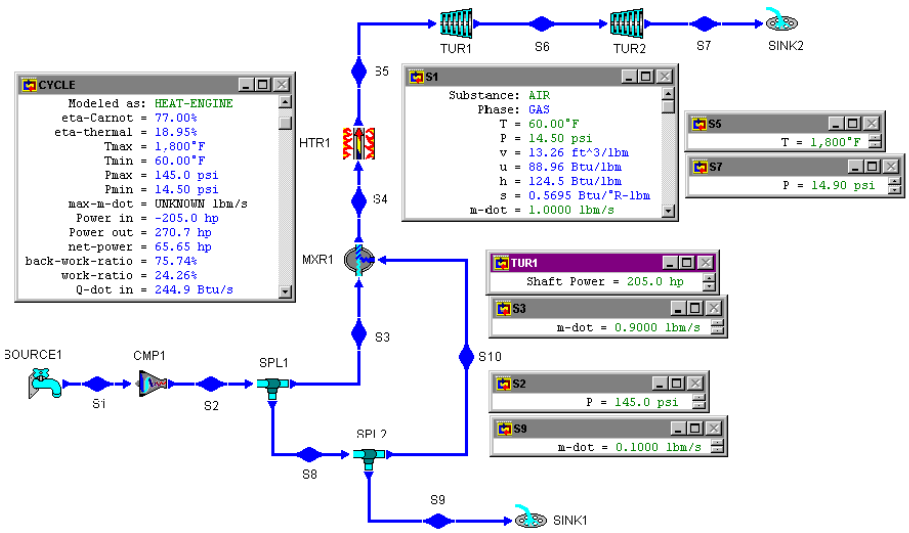

Figure E10.6.1. Bleed air Brayton cycle.

Example 10.6.2.

An open, split-shaft, air bleed Brayton cycle illustrated in Figure 10.6.1 has the following information:

Compressor efficiency=80%, turbine efficiency=80%, compressor inlet pressure=14.5 psia, compressor inlet temperature=60EF, compressor exit pressure=145 psia, combustion chamber exit temperature=1800EF, power turbine exit pressure=14.9 psia, air mass flow rate through compressor=1 lbm/s, and air mass flow rate through combustion chamber=0.9 lbm/s.

Find the temperature of all states, power required by the compressor, power produced by turbine #1 which drives the compressor, power produced by the power turbine, rate of heat supplied by the combustion chamber, and cycle efficiency.

To solve this problem by CyclePad, we take the following steps:

(A) Build the cycle as shown by Figure 10.6.1
(B) Assume compressor as adiabatic and 80% efficient, combustion chamber and mixing chamber as isobaric, and turbines as adiabatic and 80% efficient.
(C) Input working fluid is air, compressor inlet pressure=14.5 psia, compressor inlet temperature=60EF, compressor exit pressure=145 psia, combustion chamber exit temperature=1800EF, power turbine exit pressure=14.9 psia, air mass flow rate through compressor=1 lbm/s, air mass flow rate through state 9=0.05 lbm/s, and air mass flow rate through combustion chamber=0.9 lbm/s.
(D) Display compressor power (-205 hp), input turbine #1 power=205 hp.

(E) Display the cycle properties results and state results. The answers are T_2=664.6EF, T_3=T_4=T_8=T_9=T_{10}= 664.6EF, T_6=1164EF, T_7=911.1EF, compressor power=-205 hp, turbine #1 power=205 hp, turbine #2 power=81.33 hp, rate of heat added in the combustion chamber=258.5 Btu/s, net cycle power=81.33 hp, and cycle efficiency=22.24%.

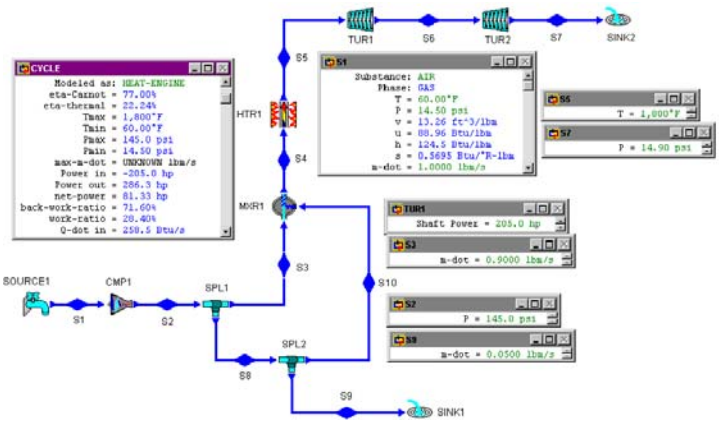

Figure E10.6.2. Bleed air Brayton cycle.

Example 10.6.3.

An open, split-shaft, air bleed Brayton cycle with two compressors (cmp1 and cmp2), three turbines (tur1, tur2, and tur3), one inter-cooler (clr1), one combustion chamber (htr1), one re-heater (htr2), and one regenerator (hx1) is illustrated in Figure E10.6.3a has the following information:

Compressor efficiency=80%, turbine efficiency=80%, compressor inlet pressure=14.5 psia, compressor inlet temperature=60EF, compressor #1 exit pressure=40 psia, inter-cooler exit temperature=100EF, compressor #2 exit pressure=140 psia, combustion chamber exit temperature=1800EF, reheater exit temperature=1800EF, regenerator hot-side exit temperature=500EF, power turbine exit pressure=14.9 psia, air mass flow rate through compressor #2=1 lbm/s, and air mass flow rate through combustion chamber=0.9 lbm/s, air mass flow rate through state 15=0.1 lbm/s, air mass flow rate through state 17=0.01 lbm/s, and air mass flow rate through state 13=0 lbm/s (regenerator is off).

Find the temperature of all states, power required by the compressors, power produced by turbine #1 which drives the compressor #1, power produced by turbine #2 which drives the compressor #2, power produced by the power turbine #3, rate of heat supplied by the combustion chamber, rate of heat supplied by the reheater, rate of heat removed from the inter-cooler, and cycle efficiency.

To solve this problem by CyclePad, we take the following steps:

(A) Build the cycle as shown by Figure E10.6.3a.

(B) Assume all compressors as adiabatic and 80% efficient, combustion chamber, re-heater, inter-cooler, heat exchanger (both hot- and cold-side) and mixing chamber as isobaric, and all turbines as adiabatic and 80% efficient.

(C) Input working fluid is air, compressor inlet pressure=14.5 psia, compressor inlet temperature=60EF, compressor #1 exit pressure=40 psia, inter-cooler exit temperature=100EF, compressor #2 exit pressure=140 psia, combustion chamber exit temperature=1800EF, re-heater exit temperature=1800EF, regenerator hot-side exit temperature=500EF, power turbine exit pressure=14.9 psia, air mass flow rate through compressor #2=1 lbm/s, and air mass flow rate through combustion chamber=0.9 lbm/s, air mass flow rate through state 15=0.1 lbm/s, air mass flow rate through state 17=0.01 lbm/s, and air mass flow rate through state 13=0 lbm/s (regenerator is off).

(D) Display compressor power #1 (-74.08 hp), input turbine #1 power=74.08 hp; Display compressor power #2 (-102.1 hp), input turbine #2 power=102.1 hp;

(E) Display the cycle properties results and state results. The answers are T_2=278.5EF, T_3=100EF, T_4=401.1EF=T_5=T_{15}=T_{17}=401.1EF, T_7=T_{11}=1800EF, T_8=1673EF, T_9=1452EF, T_{10}=1148EF, T_{12}=1359EF, compressor #1power=-74.08 hp, turbine #1 power=74.08 hp, compressor #2 power=-102.1 hp, turbine #2 power=102.1 hp, turbine #3 power=148.1 hp, rate of heat added in the combustion chamber=301.8 Btu/s, rate of heat added in the re-heater=154.7 Btu/s, rate of heat removed in the inter-cooler=-42.78 Btu/s, net cycle power=148.1 hp, and cycle efficiency=22.94%.

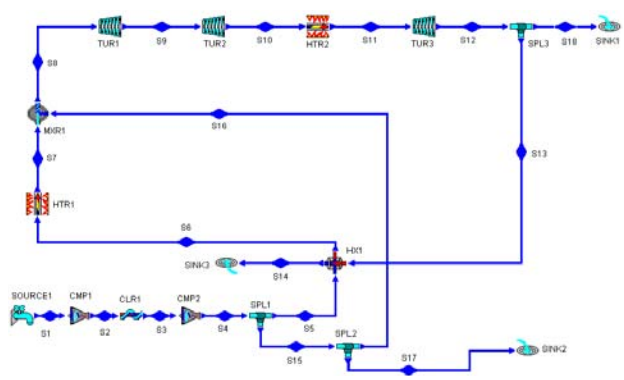

Figure E10.6.3a. Bleed air Brayton cycle (regenerator off).

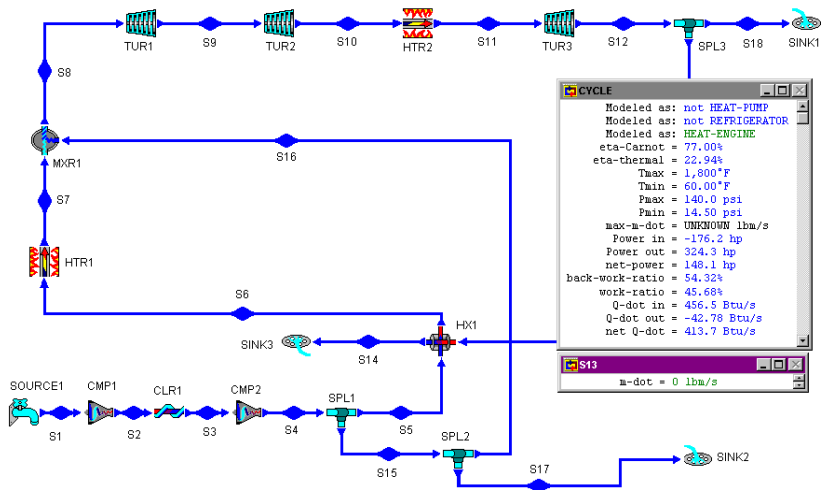

Figure E10.6.3b. Bleed air Brayton cycle (regenerator off).

Example 10.6.4.

An open, split-shaft, air bleed Brayton cycle with two compressors (cmp1 and cmp2), three turbines (tur1, tur2, and tur3), one inter-cooler (clr1), one combustion chamber (htr1), one re-heater (htr2), and one regenerator (hx1) is illustrated in Figure E10.6.4 has the following information:

Compressor efficiency=80%, turbine efficiency=80%, compressor inlet pressure=14.5 psia, compressor inlet temperature=60EF, compressor #1 exit pressure=40 psia, inter-cooler exit temperature=100EF, compressor #2 exit pressure=140 psia, combustion chamber exit temperature=1800EF, re-heater exit temperature=1800EF, regenerator hot-side exit temperature=500EF, power turbine exit pressure=14.9 psia, air mass flow rate through compressor #2=1 lbm/s, and air mass flow rate through combustion chamber=0.9 lbm/s, air mass flow rate through state 15=0.1 lbm/s, air mass flow rate through state 17=0.01 lbm/s, and air mass flow rate through state 13=0.99 lbm/s (regenerator is on).

Find the temperature of all states, power required by the compressors, power produced by turbine #1 which drives the compressor #1, power produced by turbine #2 which drives the compressor #2, power produced by the power turbine #3, rate of heat supplied by the combustion chamber, rate of heat supplied by the reheater, rate of heat removed from the inter-cooler, and cycle efficiency.

To solve this problem by CyclePad, we take the following steps:

(A) Build the cycle as shown by Figure E10.6.3a.
(B) Assume all compressors as adiabatic and 80% efficient, combustion chamber, reheater, inter-cooler, heat exchanger (both hot- and cold-side) and mixing chamber as isobaric, and all turbines as adiabatic and 80% efficient.

(C) Input working fluid is air, compressor inlet pressure=14.5 psia, compressor inlet temperature=60EF, compressor #1 exit pressure=40 psia, inter-cooler exit temperature=100EF, compressor #2 exit pressure=140 psia, combustion chamber exit temperature=1800EF, re-heater exit temperature=1800EF, regenerator hot-side exit temperature=500EF, power turbine exit pressure=14.9 psia, air mass flow rate through compressor #2=1 lbm/s, and air mass flow rate through combustion chamber=0.9 lbm/s, air mass flow rate through state 15=0.1 lbm/s, air mass flow rate through state 17=0.01 lbm/s, and air mass flow rate through state 13=0.99 lbm/s (regenerator is on).

(D) Display compressor power #1 (-74.08 hp), input turbine #1 power=74.08 hp; Display compressor power #2 (-102.1 hp), input turbine #2 power=102.1 hp;

(E) Display the cycle properties results and state results. The answers are T_2=278.5EF, T_3=100EF, T_4=401.1EF=T_5=T_{15}=T_{17}=401.1EF, T_7=T_{11}=1800EF, T_8=1673EF, T_9=1452EF, T_{10}=1148EF, T_{12}=1359EF, compressor #1power=-74.08 hp, turbine #1 power=74.08 hp, compressor #2 power=-102.1 hp, turbine #2 power=102.1 hp, turbine #3 power=148.1 hp, rate of heat added in the combustion chamber=301.8 Btu/s, rate of heat added in the re-heater=154.7 Btu/s, rate of heat removed in the inter-cooler=-42.78 Btu/s, net cycle power=148.1 hp, and cycle efficiency=22.94%.

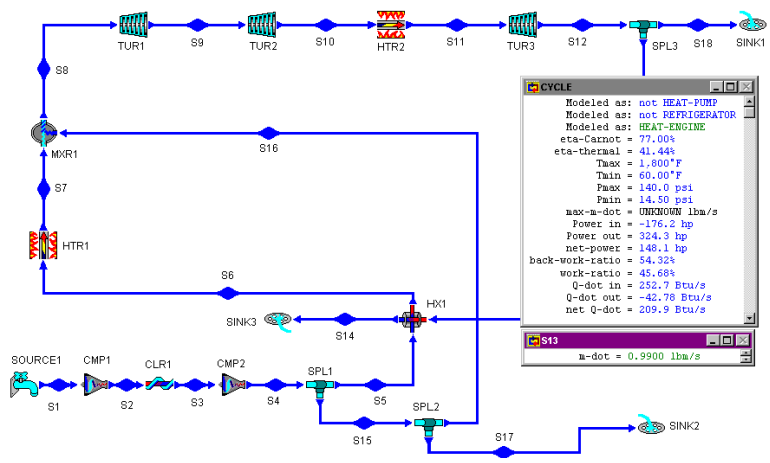

Figure E10.6.4. Bleed air Brayton cycle (regenerator on).

Homework 10.6. Bleed Air Brayton Cycle

1. Why do we need bleed air in practical gas turbine cycles?
2. How do you control the power output of a real gas turbine cycle using bleed air?
3. Does the efficiency of a real gas turbine cycle increase using bleed air?
4. Bleed air is used in a split-shaft gas turbine cycle. The following information is provided:

   Compressor–air inlet temperature and pressure are 60EF and14.5 psia, efficiency=85%, exit pressure is 145 psia, and mdot=1 lbm/s

   Combustion chamber–q_{supply}=400 Btu/lbm, and mdot=1 lbm/s (no bleed air)

Turbine #1 – efficiency=92.3%
Turbine #2 – efficiency=92.3%, air exit pressure=15 psia
Determine temperature of all states of the cycle, compressor power required, power produced by turbine #1, power produced by turbine #2, and cycle efficiency.
ANSWER: T_2=629EF, T_3=629EF, T_4=1881EF, T_5=1881EF, T_6=1312EF, T_7=837.6EF, $Wdot_{compressor}$=-192.9 hp, $Wdot_{turbine\ \#1}$=192.9 hp, $Wdot_{turbine\ \#2}$=160.8 hp, 0=37.88%.

5. Bleed air is used in a split-shaft gas turbine cycle. The following information is provided:
   Compressor–air inlet temperature and pressure are 60EF and14.5 psia, efficiency=85%, exit pressure is 145 psia, and mdot=1 lbm/s
   Combustion chamber–q_{supply}=400 Btu/lbm, and mdot=0.95 lbm/s
   Turbine #1 – efficiency=92.3%
   Turbine #2 – efficiency=92.3%, air exit pressure=15 psia
   Determine temperature of all states of the cycle, compressor power required, power produced by turbine #1, power produced by turbine #2, and cycle efficiency.
   ANSWER: T_2=629EF, T_3=629EF, T_4=1881EF, T_5=1881EF, T_6=1282EF, T_7=837.6EF, $Wdot_{compressor}$=-192.9 hp, $Wdot_{turbine\ \#1}$=192.9 hp, $Wdot_{turbine\ \#2}$=143.2 hp, 0=35.49%.
6. Bleed air is used in a split-shaft gas turbine cycle. The following information is provided:
   Compressor–air inlet temperature and pressure are 60EF and14.5 psia, efficiency=85%, exit pressure is 145 psia, and mdot=1 lbm/s
   Combustion chamber–q_{supply}=400 Btu/lbm, and mdot=0.9 lbm/s
   Turbine #1 – efficiency=92.3%
   Turbine #2 – efficiency=92.3%, air exit pressure=15 psia
   Determine temperature of all states of the cycle, compressor power required, power produced by turbine #1, power produced by turbine #2, and cycle efficiency.
   ANSWER: T_2=629EF, T_3=629EF, T_4=1881EF, T_5=1881EF, T_6=1249EF, T_7=837.6EF, $Wdot_{compressor}$=-192.9 hp, $Wdot_{turbine\ \#1}$=192.9 hp, $Wdot_{turbine\ \#2}$=125.4 hp, 0=32.83%.
7. Bleed air is used in a split-shaft gas turbine cycle. The following information is provided:
   Compressor–air inlet temperature and pressure are 60EF and14.5 psia, efficiency=85%, exit pressure is 145 psia, and mdot=1 lbm/s
   Combustion chamber–q_{supply}=400 Btu/lbm, and mdot=0.9 lbm/s
   Turbine #1 – efficiency=92.3%, mdot=1 lbm/s
   Turbine #2 – efficiency=92.3%, air exit pressure=15 psia, mdot=1lbm/s
   Determine temperature of all states of the cycle, compressor power required, power produced by turbine #1, power produced by turbine #2, and cycle efficiency.
   ANSWER: T_2=629EF, T_3=629EF, T_4=1881EF, T_5=1756EF, T_6=1187EF, T_7=768.2EF, $Wdot_{compressor}$=-192.9 hp, $Wdot_{turbine\ \#1}$=192.9 hp, $Wdot_{turbine\ \#2}$=141.9 hp, 0=37.14%.

10.7. FEHER CYCLE

The *Feher cycle* as shown in Figure 10.7.1 is a single-phase cycle operating above the critical point of the working fluid. It incorporates the efficient pumping of the Rankine cycle with the regenerative heating features of the Brayton cycle to achieve higher theoretical efficiencies. The components of the cycle are identical to those of Brayton cycle except that the higher pressures permit a substantial reduction in the size of all components. The T-s diagram of the cycle is shown in Figure 10.7.2. The four processes of the Feher cycle are isentropic compression process 1-2, isobaric heat addition process 2-3, isentropic expansion process 3-4, and isobaric heat removal process 4-1. Carbon dioxide with a critical pressure of 73.9 bars (1072 psia) and critical temperature of 304 K (88EF) appears to be the most suitable working fluid for such a cycle.

Applying the First law and Second law of thermodynamics of the closed system to each of the four processes of the cycle yields:

$$Q_{12} - W_{12} = m(h_2 - h_1),\ Q_{12}=0 \tag{10.7.1}$$

$$Q_{23} - W_{23} = m(h_3 - h_2), W_{23}=0 \tag{10.7.2}$$

$$Q_{34} - W_{34} = m(h_4 - h_3), Q_{34}=0 \tag{10.7.3}$$

and

$$Q_{41} - W_{41} = m(h_1 - h_4),\ W_{41} = 0 \tag{10.7.4}$$

The net work (W_{net}), which is also equal to net heat (Q_{net}), is

$$W_{net} = W_{12} + W_{34} = Q_{net} = Q_{23} + Q_{41} \tag{10.7.5}$$

$$0 = W_{net} / Q_{23} \tag{10.7.6}$$

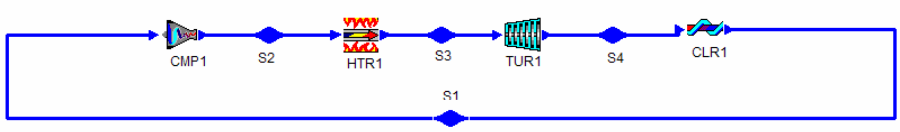

Figure 10.7.1. Feher cycle.

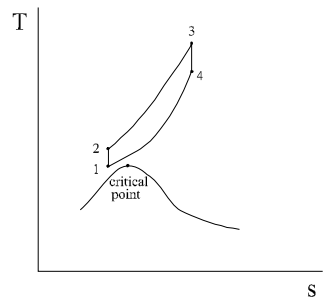

Figure 10.7.2. Feher cycle T-s diagram.

If a regenerator is added to the Feher cycle as shown in Figure 10.7.3 and the following example. The cycle would have an efficiency of 39.82%, which is comparable to today's best steam power plant.

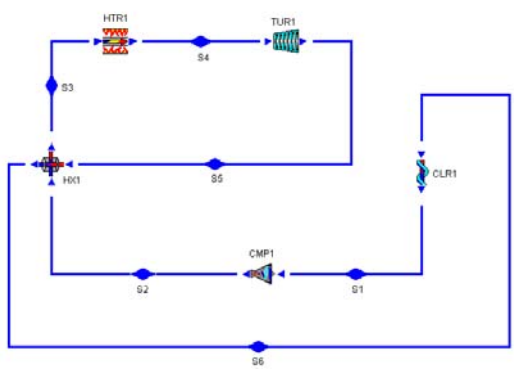

Figure 10.7.3. Feher cycle with regenerator.

Example 10.7.1.

A proposed Feher cycle using carbon dioxide has the following design information: turbine efficiency=0.88, compressor efficiency=0.88, mass rate flow of carbon dioxide=1 lbm/s, compressor inlet pressure=1950 psia, compressor inlet temperature=100EF, turbine inlet pressure=4000 psia, and turbine inlet temperature=1300EF.

Determine the compressor power, turbine power, rate of heat added, rate of heat removed, and cycle efficiency.

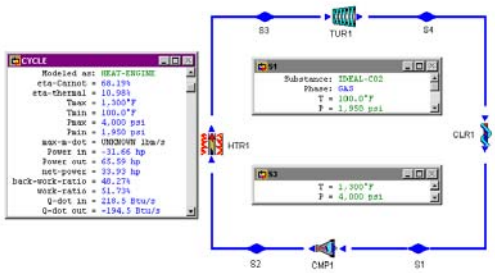

Figure E10.7.1. Feher cycle

The answers are: $Wdot_{compressor}$=-31.66 hp, $Wdot_{turbine}$=-65.59 hp, $Qdot_{heater}$=218.5 Btu/s, $Qdot_{cooler}$=-194.5 Btu/s, and 0=10.98%.

Example 10.7.2.

A proposed Feher cycle with a regenerator using carbon dioxide has the following design information: turbine efficiency=0.88, compressor efficiency=0.88, mass rate flow of carbon dioxide=1 lbm/s, compressor inlet pressure=1950 psia, compressor inlet temperature=100EF, combustion chamber inlet temperature=1000EF, turbine inlet pressure=4000 psia, and turbine inlet temperature=1300EF.

Determine the compressor power, turbine power, rate of heat added, rate of heat removed, and cycle efficiency.

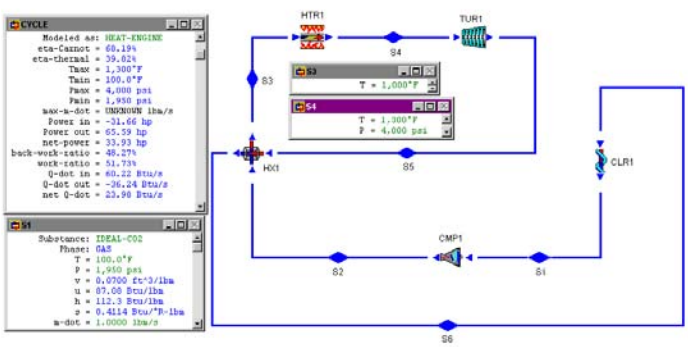

Figure E10.7.2. Feher cycle with regenerator.

The answers are: $Wdot_{compressor}$=-31.66 hp, $Wdot_{turbine}$=-65.59 hp, $Qdot_{heater}$=218.5 Btu/s, $Qdot_{cooler}$=-194.5 Btu/s, 0=39.82%.

Homework 10.7. Feher Cycle

1. What are the four processes of the Feher cycle?
2. What is the difference between the Feher and the Brayton cycle?

3. A proposed Feher cycle using carbon dioxide has the following design information:
   turbine efficiency=0.9, compressor efficiency=0.85, mass rate flow of carbon dioxide=1 lbm/s, compressor inlet pressure=1950 psia, compressor inlet temperature=120EF, turbine inlet pressure=4200 psia, and turbine inlet temperature=1400EF.
   Determine the compressor power, turbine power, rate of heat added, rate of heat removed, and cycle efficiency.
   ANSWER: -36.46 hp, 75.30 hp, 231.2 Btu/s, -203.7 Btu/s, and 11.88%.
4. A proposed Feher cycle with a regenerator using carbon dioxide has the following design information:
   turbine efficiency=0.9, compressor efficiency=0.85, mass rate flow of carbon dioxide=1 lbm/s, compressor inlet pressure=1950 psia, compressor inlet temperature=120EF, combustion chamber inlet temperature=1000EF, turbine inlet pressure=4200 psia, and turbine inlet temperature=1300EF.
   Determine the compressor power, turbine power, rate of heat added, rate of heat removed, and cycle efficiency.
   ANSWER: -36.46 hp, 71.25 hp, 211.1 Btu/s, -186.5 Btu/s, and 11.65%.

10.8. ERICSSON CYCLE

Thermal cycle efficiency of a Brayton cycle can be increased by adding more inter-coolers, compressors, re-heaters, turbines, and regeneration. However, there is an economic limit to the number of stages of inter-coolers and compressors, and re-heaters and turbines.

If an infinite number of inter-coolers and compressors, and re-heaters and turbines are added to a basic ideal Brayton cycle, the inter-cooling and multi-compression processes approaches an isothermal process. Similarly, the reheat and multi-expansion processes approaches another isothermal process. This limiting Brayton cycle becomes an *Ericsson cycle*.

The schematic Ericsson cycle is shown in Figure 10.8.1. The p-v and T-s diagrams of the cycle is shown in Figure 10.8.2. The cycle consists of two isothermal processes and two isobaric processes. The four processes of the Ericsson cycle are isothermal compression process 1-2 (compressor), isobaric compression heating process 2-3 (heater), isothermal expansion process 3-4 (turbine), and isobaric expansion cooling process 4-1 (cooler).

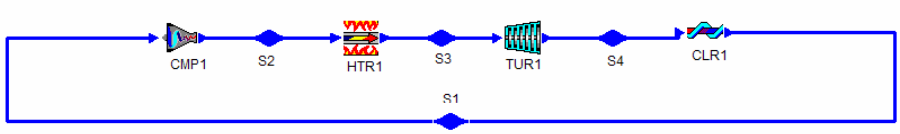

Figure 10.8.1. Schematic Ericsson cycle.

Applying the basic laws of thermodynamics, we have

$$q_{12} - w_{12} = h_2 - h_1 \tag{10.8.1}$$

$$q_{23} - w_{23} = h_3 - h_2,\ w_{23} = 0 \tag{10.8.2}$$

$$q_{34} - w_{34} = h_4 - h_3 \tag{10.8.3}$$

$$q_{41} - w_{41} = h_1 - h_4,\ w_{41} = 0 \tag{10.8.4}$$

The net work produced by the cycle is

$$w_{net} = w_{12} + w_{34} \tag{10.8.5}$$

The heat added to the cycle is

$$q_{add} = q_{23} + q_{34}. \tag{10.8.6}$$

The cycle efficiency is

$$0 = w_{net} / q_{add}. \tag{10.8.7}$$

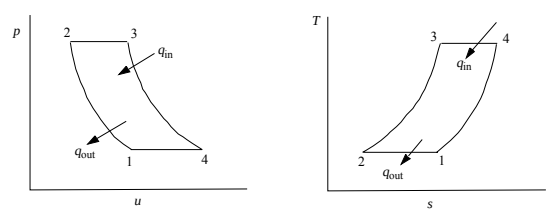

Figure 10.8.2. Ericsson cycle p-v and T-s diagram.

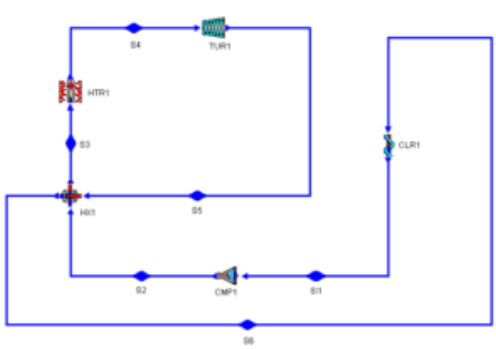

Figure 10.8.3. Schematic Ericsson cycle with a regenerator.

Example 10.8.1.

Air, at a mass flow rate of 1 kg/s, is compressed and heated from 100 kPa and 100EC in an Ericsson cycle to a turbine inlet at 1000 kPa and 1000EC. Determine the pressure and temperature of each of the four states, power and rate of heat added in each of the four devices, and cycle efficiency.

To solve this problem by CyclePad, we do the following steps:

(A) Build the cycle as shown in Figure 10.8.1. Assuming the compressor is isothermal, the heater is isobaric, the turbine is isothermal, and the cooler is isobaric.

(B) Input working fluid=air, mass flow rate=1 kg/s, compressor inlet pressure=100 kPa, compressor inlet temperature=100EC, turbine inlet pressure=1000 kPa, and turbine inlet temperature=1000EC.

(C) Display results. The answers are: T_2=100EC, p_2=1000 kPa, T_4=1000EC, p_2=100 kPa, $Qdot_{htr}$=903.1 kW, $Qdot_{clr}$=-903.1 kW, $Qdot_{cmp}$=-246.3 kW, $Wdot_{cmp}$=-246.3 kW, $Qdot_{tur}$=840.4 kW, $Wdot_{cmp}$=840.4 kW, and 0=34.08. Notice that 0_{Carnot}=70.69%.

An attempt to achieve Carnot cycle efficiency is made by the Ericsson cycle using an ideal regenerator. Figure 10.8.3 shows a schematic Ericsson cycle with a regenerator. In the regenerator, gas from the compressor enters as a cold-side stream at a low temperature (T_2) and leaves at a high temperature (T_1). The gas from the turbine enters as a hot-side stream at a high temperature (T_5)and leaves at a low temperature (T_6). Suppose there is only a small temperature difference between the two gas streams at any one section of the regenerator, so that the operation of the regenerator is almost ideal. Then the heat loss by the hot-side stream gas (Q_{56}) equals to the heat gain by the cold-side stream gas (Q_{23}). The cycle efficiency is close to that of the Carnot cycle operating between the same two temperatures.

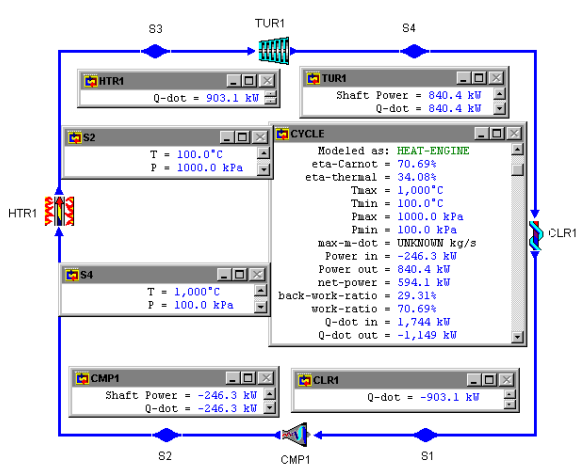

Figure E10.8.1. Ericsson cycle.

Example 10.8.2.

Air, at a mass flow rate of 1 kg/s, is compressed and heated from 100 kPa and 100EC in an Ericsson cycle to a turbine inlet at 1000 kPa and 1000EC. A regenerator is added. The inlet temperature of the hot stream in the regenerator is 995EC. Determine the pressure and temperature of each of the four states, power and rate of heat added in each of the four devices, and cycle efficiency.

To solve this problem by CyclePad, we do the following steps:

(A) Build the cycle as shown in Figure 10.8.3. Assuming the compressor is isothermal, the heater is isobaric, the turbine is isothermal, the cooler is isobaric, and the hot-side and cold-side of the regenerator are isobaric.

(B) Input working fluid=air, mass flow rate=1 kg/s, compressor inlet pressure=100 kPa, compressor inlet temperature=100EC, turbine inlet pressure=1000 kPa, turbine inlet temperature=1000EC, and regenerator hot-side inlet temperature=995EC.

(C) Display results. The answers are: T_2=100EC, p_2=1000 kPa, T_3=995EC, T_4=1000EC, p_4=100 kPa,T_6=105EC, $Qdot_{htr}$=903.1 kW, $Qdot_{clr}$=-903.1 kW, $Qdot_{cmp}$=-246.3 kW, $Wdot_{cmp}$=-246.3 kW, $Qdot_{tur}$=840.4 kW, $Wdot_{cmp}$=840.4 kW, and 0=70.52. Notice that 0=70.52 is very close to 0_{Carnot}=70.69%.

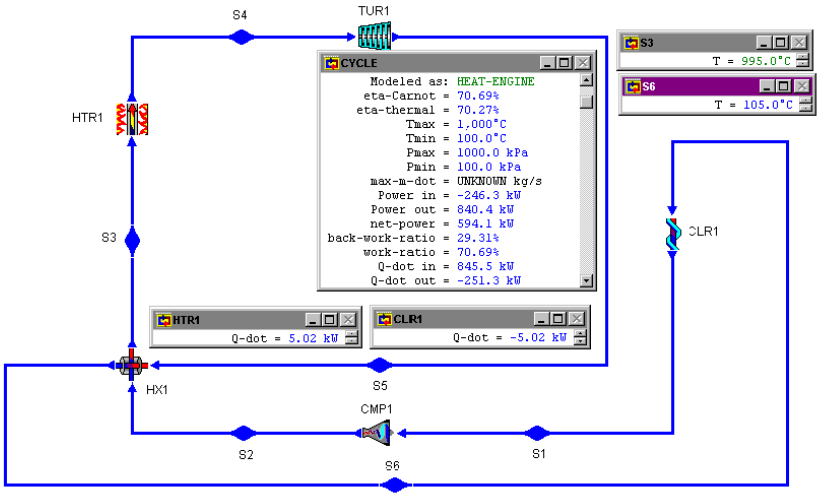

Figure E10.8.2. Ericsson cycle with regenerator.

Homework 10.8. Ericsson Cycle

1. What are the four processes of the Ericsson cycle?
2. What is the function of a regenerator?
3. Does the regenerator improve the efficiency of the Ericsson cycle?

4. Suppose an ideal regenerator is added to an Ericsson cycle. The regenerator would absorb heat from the system during part of the cycle and return exactly the same amount of heat to the system during another part of the cycle. What would be the difference between the Ericsson cycle efficiency and the Carnot cycle efficiency?
5. Air, at a mass flow rate of 1.2 kg/s, is compressed and heated from 100 kPa and 300 K in an Ericsson cycle to a turbine inlet at 1200 kPa and 1500 K. The turbine efficiency is 85% and the compressor efficiency is 88%. Determine the pressure and temperature of each of the four states, power and rate of heat added in each of the four devices, and cycle efficiency.
   ANSWER: [(100 kPa, 300 K), (1200 kPa, 300 K), (1200 kPa, 1500 K), and (100 kPa, 1500 K)], [(-256.5 kW, -256.5 kW), (0, 1445 kW), (1282 kW, 1282 kW), and (0, -1445 kW)], 37.62%.
6. Air, at a mass flow rate of 1.2 kg/s, is compressed and heated from 100 kPa and 300 K in an Ericsson cycle to a turbine inlet at 1200 kPa and 1500 K. The turbine efficiency is 85% and the compressor efficiency is 88%. A regenerator is added. The inlet temperature of the hot stream in the regenerator is 1495 K. Determine the pressure and temperature of each of the states, power and rate of heat added in each of the four devices, and cycle efficiency. What would be the efficiency of the Carnot cycle operating between 300 K and 1500 K?
   ANSWER: [(100 kPa, 300 K), (1200 kPa, 300 K), (1200 kPa, 1495 K), (1200 kPa, 1500 K), (100 kPa, 1500 K), and (100 kPa, 305 K)], [(-256.5 kW, -256.5 kW), (0, 1439 kW), (0, 6.02 kW), (1282 kW, 1282 kW), and (0, -6.02 kW)], and 79.63%; 80%.

10.9. BRAYSSON CYCLE

A *Braysson* cycle proposed by Frost, Anderson and Agnew [Reference: Frost, T.H., A. Anderson, and B. Agnew, A hybrid gas turbine cycle (Brayton/Ericsson): an alternative to conventional combined gas and steam turbine power plant, *Proceedings of the Institution of Mechanical Engineers, Part A, Journal of Power and Energy*, vol.211, n.A2, pp121-131, 1997] is an alternative to the Brayton/Rankine combined gas and steam turbine power plant. The Braysson cycle is a combination of a single Brayton cycle and an Ericsson cycle. The cycle takes advantage of the high-temperature heat addition process of the Brayton cycle and the low-temperature heat rejection process of the Ericsson cycle. It employs one working fluid in the two cycles in such a way that the full waste heat from the top Brayton cycle serves as the heat source for the bottom Ericsson cycle. The total power output of the Braysson cycle is the summation of the power produced by the top and bottom cycles.

A design of such a novel Braysson cycle [Reference: Wu, C., Intelligent computer aided optimization of power and energy systems, *Proceedings of the Institution of Mechanical Engineers, Part A, Journal of Power and Energy*, vol.213, n.A1, pp1-6, 1999] consisting of four compressors, one combustion chamber, two turbines, and two coolers is shown in Figure 10.9.1. The T-s diagram of the Braysson cycle is shown in Figure 10.9.2. Another arrangement of the Braysson cycle consisting of four compressors, one combustion chamber, two turbines, and two coolers is shown in Figure 10.9.3.

Neglecting kinetic and potential energy changes, a steady state and steady flow mass and energy balance on the components of the Braysson cycle have the general forms

$$3mdot_e = 3mdot_i, \tag{10.9.1}$$

and

$$Qdot\text{-}Wdot=3mdot_e h_e - 3mdot_i h_i. \tag{10.9.2}$$

The energy input of the cycle is the heat added in the heater. The net energy output of the cycle is the sum of the work added to the individual compressors and work produced by the turbines

$$Wdot_{net}=3Wdot_{compressor}+3Wdot_{turbine} \tag{10.9.3}$$

and the efficiency of the cycle is

$$0=Wdot/Qdot_{heater} \tag{10.9.4}$$

The following examples illustrate the analysis of the Braysson cycle.

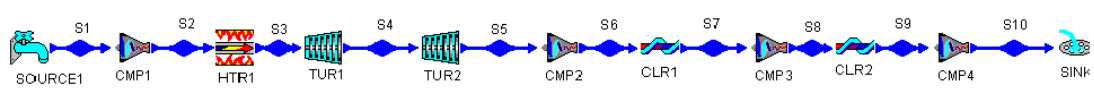

Figure 10.9.1. Braysson cycle.

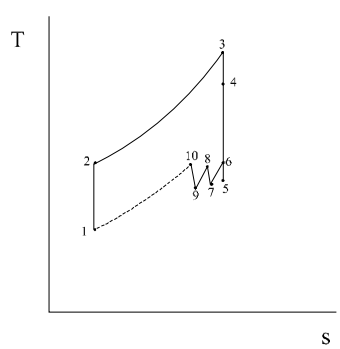

Figure 10.9.2. Braysson cycle T-s diagram.

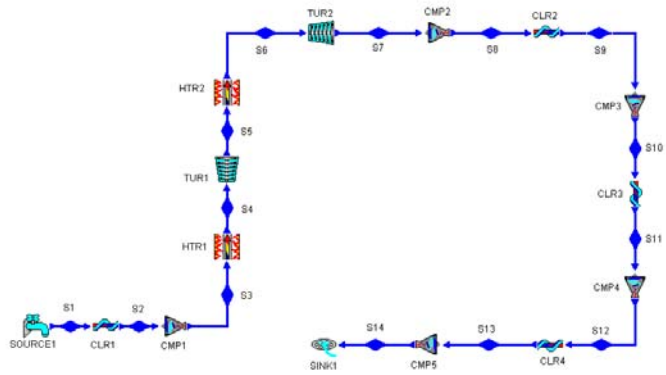

Figure 10.9.3. Braysson cycle.

Example 10.9.1.

A Braysson cycle (Fig. 10.9.1) uses air as the working fluid with 1 kg/s of mass flow rate through the cycle. In the cycle, air enters from the atmospheric source to an isentropic compressor at 20EC and 1 bar (state 1) and leaves at 8 bar (state 2); air enters an isobaric heater (combustion chamber) and leaves at 1100EC (state 3); air enters a high pressure isentropic turbine and leaves at 1 bar (state 4). Air enters a low pressure isentropic turbine and leaves at 0.04 bar (state 5); air enters a first-stage isentropic compressor and leaves at 0.2 bar (state 6); air enters an isobaric inter-cooler and leaves at 20EC (state 7); air enters a second-stage isentropic compressor and leaves at 1 bar (state 8); and air is discharged to the atmospheric sink.

Determine the thermodynamic efficiency and the net power output of the Braysson combined plant. Plot the sensitivity diagram of 0 (cycle efficiency) vs p_6 (pressure at state 6) and sensitivity diagram of 0 (cycle efficiency) vs p_8 (pressure at state 8).

To solve this problem by CyclePad, we do the following steps:

(A) Build the cycle as shown in Figure 10.9.1. Assuming the compressors are adiabatic and isentropic, the heater is isobaric, the turbines are adiabatic and isentropic, and the coolers are isobaric.

(B) Input working fluid=air, p_1=1bar, T_1=20EC, mdot=1 kg/s, p_2=8 bar, T_3=1100EC, p_4=1bar, p_5=0.04 bar, p_6=0.2 bar, compressor inlet temperature=100EC, turbine inlet pressure=1000 kPa, turbine inlet temperature=1000EC, T_7=20EC, p_8=0.6 bar, T_9=20EC, and p_{10}=1bar.

(C) Display results. The answers are 0=59.67%, and power input=-570.4 kW, power output=1075 kW, net power output=504.2 kW, Qdot in=845.0 kW (see Figure E10.9.1a).

(D) Display sensitivity diagram of 0 (cycle efficiency) vs p_6 (pressure at state 6) and sensitivity diagram of 0 (cycle efficiency) vs p_8 (pressure at state 8) (see Figure E10.9.1b and c).

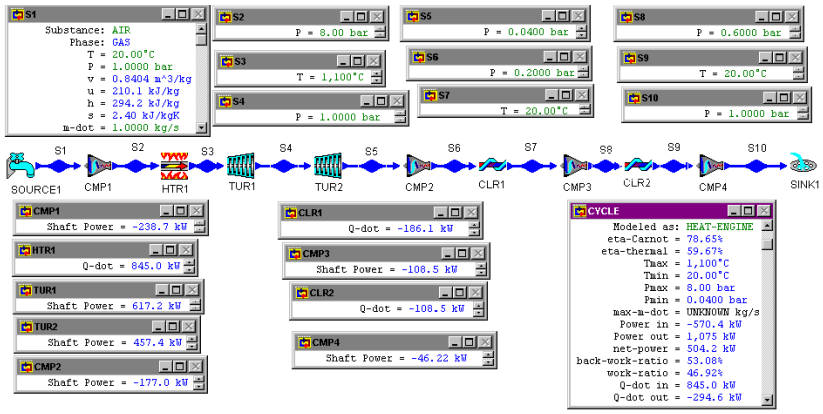

Figure E10.9.1a. Braysson cycle.

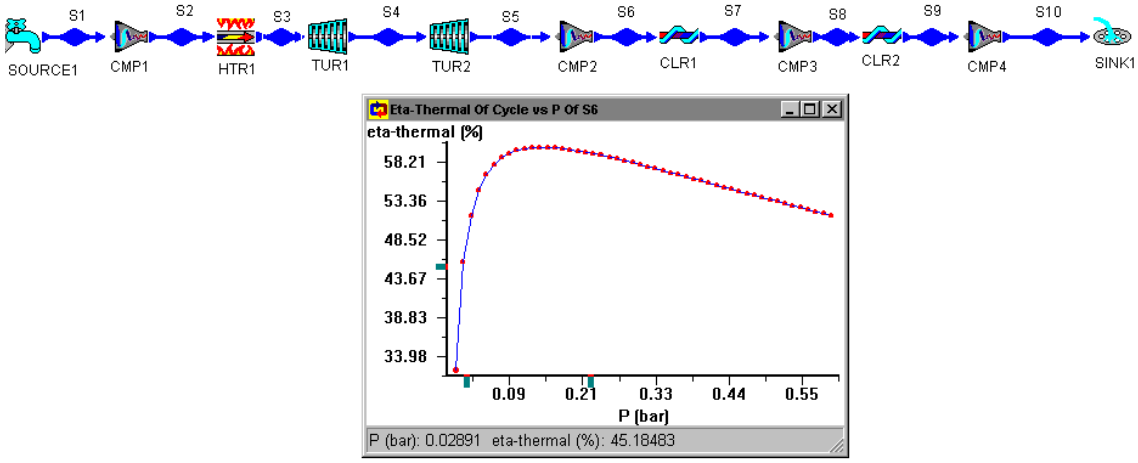

Figure E10.9.1b. Braysson cycle sensitivity diagram.

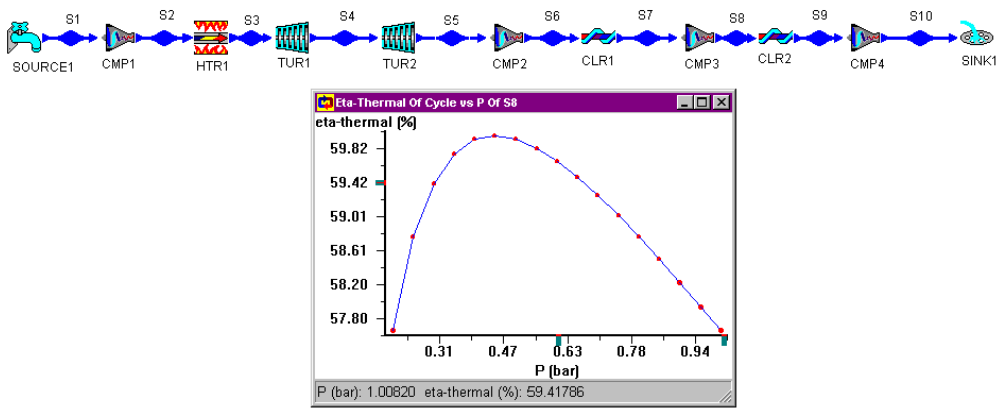

Figure E10.9.1c. Braysson cycle sensitivity diagram.

Design of differently arranged Braysson cycles such as a simple Braysson cycle with two-stage compressor, and a Braysson cycle with four-stage compressor can be made. The four-stage compressor Braysson cycle is a refinement of the three-stage compressor Braysson cycle. Other improvement include (1) a re-heater added in the Brayton cycle of the combined cycle, (2) more re-heaters and more turbines added in the Brayton cycle, (3) more compressors and more inter-coolers added in the Ericsson cycle, etc.

Homework 10.9. Braysson Cycle

1. What is a Braysson cycle?
2. Why is the efficiency of the Braysson cycle high?
3. A Braysson cycle (Fig. 10.9.1) uses air as the working fluid with 1 kg/s of mass flow rate through the cycle. In the Brayton cycle, air enters from the atmospheric source to a compressor at 20EC and 1 bar (state 1) and leaves at 8 bar (state 2); air enters an isobaric heater (combustion chamber) and leaves at 1100EC (state 3); air enters a high pressure turbine and leaves at 1 bar (state 4). In the Ericsson cycle, air enters a low pressure turbine and leaves at 0.04 bar(state 5); air enters a first-stage compressor and leaves at 0.2 bar (state 6); air enters an isobaric inter-cooler and leaves at 20EC (state 7); air enters a second-stage compressor and leaves at 1 bar (state 8); and air is discharged to the atmospheric sink. Assume all turbines and compressors have 85% efficiency.
   Determine the thermodynamic efficiency and the net power output of the Braysson combined plant. Plot the sensitivity diagram of 0 (cycle efficiency) vs p_6 (pressure at state 6) and sensitivity diagram of 0 (cycle efficiency) vs p_8 (pressure at state 8).
   ANSWER: 0=26.34%, Power input=-749.3 kW, Power output=960.7 kW, Qdot in=802.9 kW.
4. A Braysson cycle (Fig. 10.9.1) uses air as the working fluid with 1 kg/s mass flow rate through the cycle. In the Brayton cycle, air enters from the atmospheric source to a compressor at 20EC and 1 bar (state 1) and leaves at 8 bar (state 2); air enters an

isobaric heater (combustion chamber) and leaves at 1100EC (state 3); air enters a high pressure isentropic turbine and leaves at 1 bar (state 4). In the Ericsson cycle, air enters a low pressure isentropic turbine and leaves at 0.04 bar(state 5); air enters a first-stage compressor and leaves at 0.2 bar (state 6); air enters an isobaric inter-cooler and leaves at 20EC (state 7); air enters a second-stage compressor and leaves at 1 bar (state 8); and air is discharged to the atmospheric sink. Assume all compressors have 85% efficiency.

Determine the thermodynamic efficiency and the net power output of the Braysson combined plant. Plot the sensitivity diagram of 0 (cycle efficiency) vs p_6 (pressure at state 6) and sensitivity diagram of 0 (cycle efficiency) vs p_8 (pressure at state 8).

ANSWER: 0=50.26%, Power input=-671.1 kW, Power output=1075 kW, Qdot in=802.9 Kw.

10.10. STEAM INJECTION GAS TURBINE CYCLE

The injection of water or steam in gas turbines has been known (Reference: Nicolin, C., A gas turbine with steam injection, Swedish Patent application No.8112/51, Stockholm, Sweden, 1951) as an efficient method for NO_x abatement and power boosting. Several cycle configurations are possible with respect to water/steam injection. Figure 10.10.1 is the schematic diagram of the *Steam injection gas turbine cycle*. Air is compressed from state 1 to state 2. Water is pumped from state 7 to state 8. Steam at state 9 is generated in a recovery boiler (heat exchanger) from state 8 by the hot exhaust gas. Steam at state 8 is injected into air at state 2 in a mixing chamber. Air and steam is then heated in the combustion chamber from state 3 to state 4, expanded in the gas turbine from state 4 to state 5, and exhausted to the recovery boiler from state 5 to state 6. The mixing chamber can be located either between the compressor and the combustion chamber (heater), or between the combustion chamber (heater) and the turbine. The mass flow rate of injected steam is of the order of 15% of the mass flow rate of air supplied to the gas turbine. Comparing the cycle with a gas turbine cycle without steam injection, we can see that the compressor work is not effected, but the turbine work increases considerably due to increasing of gas mass and increasing of substance specific heat (c_p). Therefore the net output work of the steam injection gas turbine cycle increases.

The beneficial influences of the steam injection gas turbine cycle include:

(1) It provides an increase in both power output and overall efficiency. For a given temperature at inlet to the gas turbine, extra fuel has to be supplied in order to heat the injected steam to that temperature, but the additional power arising from the expansion of the injected steam as it passes through the gas turbine more than offsets the otherwise adverse effect on the overall efficiency of the cycle of the increase in fuel supply.

(2) As a result of the cooling effect of the steam in the primary flame zone of the combustion chamber, it results in a reduction in the emission of noxious oxides of nitrogen, NO_x, from the cycle.

CyclePad is not able to do the steam injection gas turbine cycle, because there is no binary working fluid in the substance menu of the software.

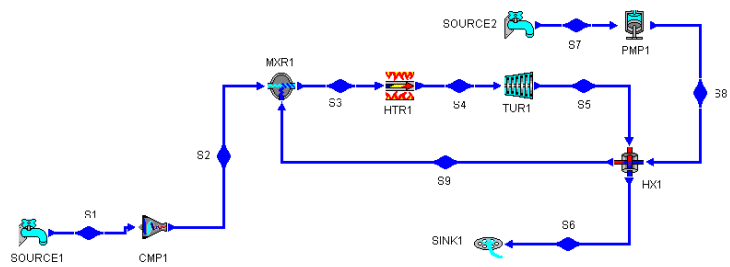

Figure 10.10.1. Steam injection gas turbine cycle.

Homework 10.10. Steam Injection Gas Turbine Cycle

1. Draw the schematic diagram of the Steam injection gas turbine cycle by putting the mixing chamber between the combustion chamber (heater) and the turbine.
2. What are the main beneficial influences of the steam injection gas turbine cycle?

10.11. FIELD CYCLE

The *Field cycle* (Reference: Field, J.F., The application of gas turbine Technique to steam power, *Proceedings of the Institute of Mechanical Engineers*, p153, v162, n209, 1950) is a super-generative cycle which makes use of the high-temperature heat addition of the Brayton cycle and the low-temperature heat removal of Rankine cycle. Therefore, it is able to achieve a high mean temperature of heat addition. The gain due to high-temperature heat addition, however, is offset by the reduction in cycle efficiency resulting from the irreversibility of the mixing process. The schematic diagram of the Field cycle is shown in Figure 4.11.1. The arrangement includes one compressor, five turbines, three pumps, one boiler and one re-heater (heaters), one regenerator (heat exchanger), one condenser (cooler), three mixing chambers, and two splitters. Process 1-2, 2-3, 3-4, 4-5, 5-6, and 6-7 takes advantage of the high-temperature heat addition of Brayton cycle, and the rest of the processes takes advantage of the low-temperature heat removing and regenerative condensing of Rankine cycle.

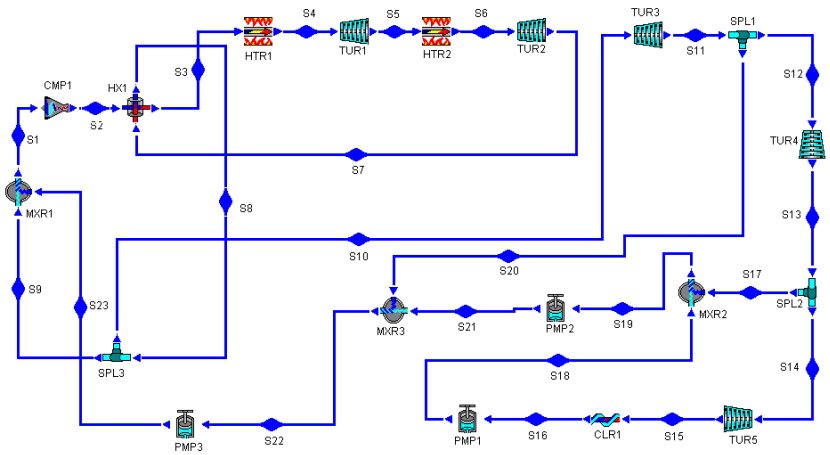

Figure 10.11.1. Field cycle schematic diagram.

Example 10.11.1.

An ideal Field cycle with perfect regeneration as shown in Figure 10.11.1 is designed according to the following data:

p_{16}=10 kPa, x_{16}=0, p_{19}=200 kPa, x_{19}=0, p_{22}=1000 kPa, x_{22}=0, p_{23}=2000 kPa, p_2=6000 kPa, T_4=500 EC, $mdot_4$=1 kg/s, p_5=4000 kPa, T_6=500 EC, T_8=300 EC, $mdot_{10}$=0.9 kg/s, and $mdot_{17}$=0.1 kg/s.

Determine (1) the pressure and temperature of each state of the cycle, (2) power produced by each of the five turbines, rate of heat added by each of the two heaters, power reuired by the compressor and each of the three pumps, rate of heat removed by the condenser, and (3) net power produced by the cycle, and cycle efficiency.

To solve this problem by CyclePad, we do the following steps:

(A) Build the cycle as shown in Figure 10.11.1. Assuming the compressor, turbines and pump are adiabatic and isentropic, the heaters, mixing chambers, cooler and regenerator are isobaric, and the splitters are iso-parametric.

(B) Input working fluid=water, p_{16}=10 kPa, x_{16}=0, p_{19}=200 kPa, x_{19}=0, p_{22}=1000 kPa, x_{22}=0, p_{23}=2000 kPa, p_2=6000 kPa, T_4=500 EC, $mdot_4$=1 kg/s, p_5=4000 kPa, T_6=500 EC, T_8=300 EC, $mdot_{10}$=0.9 kg/s, and $mdot_{17}$=0.9 kg/s.

(C) Display results as shown in Figure E10.11.1. The answers are: (1) p_1=2000 kPa, T_1=212.4 EC, p_2=6000 kPa, T_2=237.3 EC, p_3=6000 kPa, T_3=275.6 EC, p_4=6000 kPa, T_4=500 EC, p_5=4000 kPa, T_5=432.8 EC, p_6=4000 kPa, T_6=500EC, p_7=2000 kPa, T_7=388.9 EC, p_8=2000 kPa, T_8=300EC, p_9=2000 kPa, T_9=300 EC, p_{10}=2000 kPa, T_{10}=300EC, p_{11}=1000 kPa, T_{11}=214.6EC, p_{12}=1000 kPa, T_{12}=214.6EC, p_{13}=200 kPa, T_{13}=120.2EC, p_{14}=200 kPa, T_{14}=120.2EC, p_{15}=10 kPa, T_{15}=45.82EC, p_{16}=10 kPa, T_{16}=45.82EC, p_{17}=200 kPa, T_{17}=120.2EC, p_{18}=200 kPa, T_{18}=45.83EC, p_{19}=200 kPa, T_{19}=120.2EC, p_{20}=1000 kPa, T_{20}=214.6EC, p_{21}=1000 kPa, T_{21}=120.3EC, p_{22}=2000

kPa, T_{17}=179.9EC, and p_{23}=2000 kPa, T_{17}=185.7EC, (2) $Wdot_{T\#1}$=131.9 kW, $Wdot_{T\#2}$=222.4 kW, $Wdot_{T\#3}$=144.7 kW, $Wdot_{T\#4}$=238.9 kW, $Wdot_{T\#5}$=293.2 kW, $Wdot_{P\#1}$=-0.1598 kW, $Wdot_{P\#2}$=-0.6973 kW, $Wdot_{P\#3}$=-28.45 kW, $Wdot_{Compressor}$=-7.57 kW, $Qdot_{Htr\#1}$=2197 kW, $Qdot_{Htr\#2}$=155 kW, and $Qdot_{Condenser}$=-1358 kW, (3) $Wdot_{net}$=994.0 kW, and 0=42.26%.

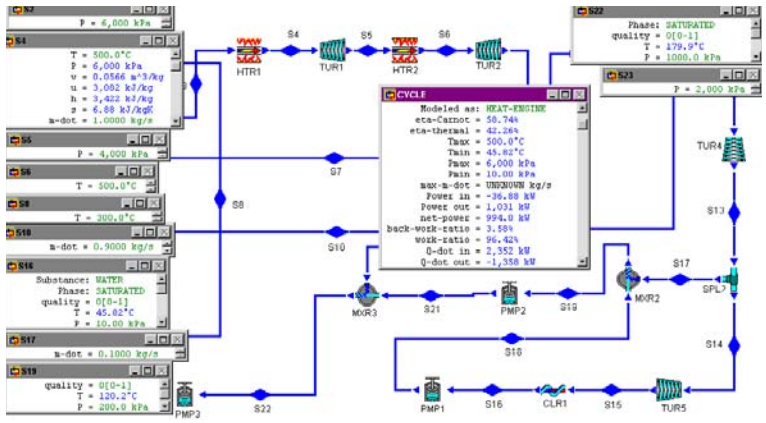

Figure E10.11.1. Field cycle.

Homework 10.11. Field Cycle

1. What is the concept of the Field cycle?
2. An ideal field cycle with perfect regeneration as shown in Figure 10.11.1 is designed according to the following data:
   p_{16}=10 kPa, x_{16}=0, p_{19}=200 kPa, x_{19}=0, p_{22}=1000 kPa, x_{22}=0, p_{23}=2000 kPa, p_2=7000 kPa, T_4=500 EC, $mdot_4$=1 kg/s, p_5=4000 kPa, T_6=500 EC, T_8=300 EC, $mdot_{10}$=0.9 kg/s, and $mdot_{17}$=0.1 kg/s.
   Determine rate of heat added by the heaters, total power produced by the turbines, total power required by the pumps and compressor, net power produced by the cycle, and cycle efficiency.
   ANSWER: $Qdot_{add}$=2393 kW, $Wdot_{Turbines}$=1073 kW, $Wdot_{Pumps\ and\ Compressor}$=-38.1 kW, $Wdot_{net}$=1035 kW, and 0=43.26%.
3. An ideal field cycle with perfect regeneration as shown in Figure 10.11.1 is designed according to the following data:
   p_{16}=10 kPa, x_{16}=0, p_{19}=200 kPa, x_{19}=0, p_{22}=1000 kPa, x_{22}=0, p_{23}=2000 kPa, p_2=7000 kPa, T_4=500 EC, $mdot_4$=1 kg/s, p_5=4000 kPa, T_6=500 EC, T_8=300 EC, $mdot_{10}$=0.9 kg/s, and $mdot_{17}$=0.12 kg/s.
   Determine rate of heat added by the heaters, total power produced by the turbines, total power required by the pumps and compressor, net power produced by the cycle, and cycle efficiency.
   ANSWER: $Qdot_{add}$=2393 kW, $Wdot_{Turbines}$=1074 kW, $Wdot_{Pumps\ and\ Compressor}$=-38.1 kW, $Wdot_{net}$=1036 kW, and 0=43.28%.

10.12. WICKS CYCLE

The Carnot cycle is the ideal cycle only for the conditions of constant temperature hot and cold surrounding thermal reservoirs. However, the conditions of constant temperature hot and cold surrounding thermal reservoirs do not exist for fuel burning engines. For fuel burning engines, the combustion products are artificially created as a finite size hot reservoir that releases heat over the entire temperature range from its maximum to ambient temperature. The natural environment in terms of air or water bodies is the cold reservoir and can be considered as an infinite reservoir relative to the engine. Thus, an ideal fuel burning engine should operate reversibly between a finite size hot reservoir and an infinite size cold reservoir. Wicks (Reference: Wicks, F., The thermodynamic theory and design of an ideal fuel burning engine, *Proceedings of the Intersociety Engineering Conference of Energy Conversion*, v2, pp474-481, 1991) proposed a three-process ideal fuel burning engine consisting of an isothermal compression, an isobaric heat addition, and an adiabatic expansion process. The schematic *Wicks cycle* is shown in Figure 10.12.1, and an example of the cycle is given in Example 10.12.1.

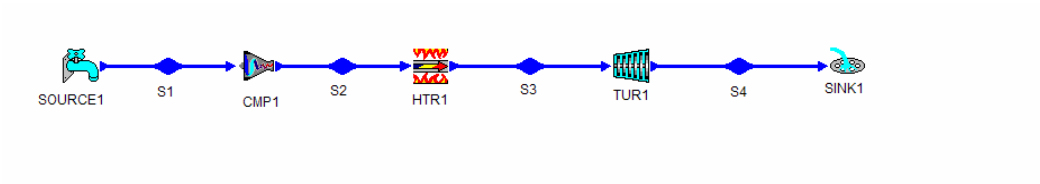

Figure 10.12.1. Wicks cycle.

Example 10.12.1.

A Wicks cycle as shown in Figure 10.12.1 is designed according to the following data:

p_1=101 kPa, T_1=5 EC, p_2=28000 kPa, T_3=1100 EC, $mdot_1$=1 kg/s, and T_4=5EC.

Determine power produced, rate of heat added, power input, net power produced by the cycle, and cycle efficiency.

To solve this problem by CyclePad, we do the following steps:

(A) Build the cycle as shown in Figure 10.12.1. Assuming the compressor, heater, and turbine are isothermal, isobaric, and isentropic.
(B) Input working fluid=air, p_1=101 kPa, T_1=5 EC, and $mdot_1$=1 kg/s; p_2=28000 kPa; T_3=1100 EC; and T_4=5EC.
(C) Display results. The answers are: $Wdot_{in}$=-448.5 kW, $Wdot_{out}$=1099 kW, $Wdot_{net}$=650.2 kW, $Qdot_{in}$=1099 kW, $Qdot_{out}$=-448.5 kW, and 0=59.18% as shown in Figure E10.12.1.

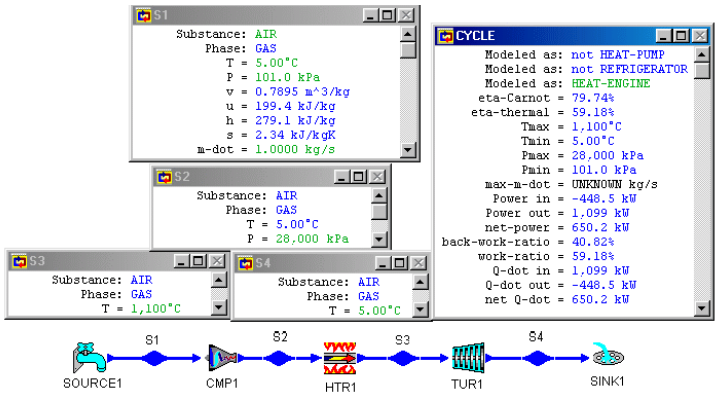

Figure E10.12.1. Wicks cycle.

Homework 10.12. Wicks Cycle

1. What is the concept of the Wicks cycle?
2. A Wicks cycle as shown in Figure 10.12.1 is designed according to the following data:
   p_1=101 kPa, T_1=10EC, p_2=28000 kPa, T_3=1050EC, $mdot_1$=1 kg/s, and T_4=10EC.
   Determine power produced, rate of heat added, power input, net power produced by the cycle, and cycle efficiency.
   ANSWER: 1044 kW, 1044 kW, -456.6 kW, 586.9 kW, 56.25%.
3. A Wicks cycle as shown in Figure 10.12.1 is designed according to the following data:
   p_1=101 kPa, T_1=20EC, p_2=28000 kPa, T_3=1050EC, $mdot_1$=1 kg/s, and T_4=20EC.
   Determine power produced, rate of heat added, power input, net power produced by the cycle, and cycle efficiency.
   ANSWER: 1034 kW, 1034 kW, -472.7 kW, 560.8 kW, 54.26%.
4. A Wicks cycle as shown in Figure 10.12.1 is designed according to the following data:
   p_1=101 kPa, T_1=30EC, p_2=28000 kPa, T_3=1050EC, $mdot_1$=1 kg/s, and T_4=30EC.
   Determine power produced, rate of heat added, power input, net power produced by the cycle, and cycle efficiency.
   ANSWER: 1023 kW, 1023 kW, -488.9 kW, 534.6 kW, 52.24%.
5. A Wicks cycle as shown in Figure 10.12.1 is designed according to the following data:
   p_1=101 kPa, T_1=0EC, p_2=28000 kPa, T_3=1050EC, $mdot_1$=1 kg/s, and T_4=0EC.
   Determine power produced, rate of heat added, power input, net power produced by the cycle, and cycle efficiency.
   ANSWER: 1054 kW, 1054 kW, -440.5 kW, 613.1 kW, 58.19%.

6. A Wicks cycle as shown in Figure 10.12.1 is designed according to the following data:
   p_1=101 kPa, T_1=0EC, p_2=28000 kPa, T_3=1000EC, $mdot_1$=1 kg/s, and T_4=0EC.
   Determine power produced, rate of heat added, power input, net power produced by the cycle, and cycle efficiency.
   ANSWER: 1003 kW, 1003 kW, -440.5 kW, 562.9 kW, 56.10%.
7. A Wicks cycle as shown in Figure 10.12.1 is designed according to the following data:
   p_1=101 kPa, T_1=0EC, p_2=28000 kPa, T_3=900EC, $mdot_1$=1 kg/s, and T_4=0EC.
   Determine power produced, rate of heat added, power input, net power produced by the cycle, and cycle efficiency.
   ANSWER: 903.1 kW, 903.1 kW, -440.5 kW, 462.6 kW, 51.22%.

10.13. ICE CYCLE

Silverstein (Reference: Silverstein, C.C, The *Ice cycle*: High gas turbine efficiency at moderate temperature, *Proceedings of the Intersociety Energy Conversion Engineering Conference*, paper number 889341, pp285-289, 1988) proposed an Ice cycle, which consists of an isothermal compression, an isentropic compression, an isothermal expansion, and an isentropic expansion process as shown in Figure 10.13.1. Its efficiency is the same as that of the Carnot cycle. An actual Ice cycle is characterized by efficiencies of 35-40%, peak temperatures below 1080 K, and overall pressure ratios of 300 to 500. Isothermal compression and isothermal expansion are approximated by the use of heat exchanger after each stage which are an integral part of the rotating equipment. Heat pipe heat exchanger appears to be particularly well adapted to integral inter-cooling and re-heat. The T-s diagram of the cycle is shown in Figure 10.13.2. The use of pressure rather than temperature and/or regenerative heat exchange to achieve high cycle efficiency can lead to major design and economic benefits of gas turbine cycle. Compressors and turbines can be fabricated from materials which will retain good strength characteristics at peak operating temperatures.

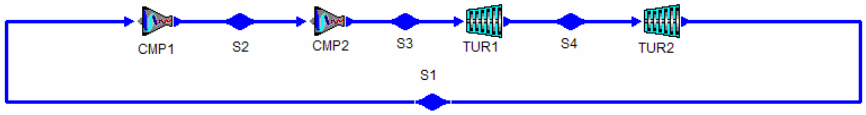

Figure 10.13.1. Ice cycle.

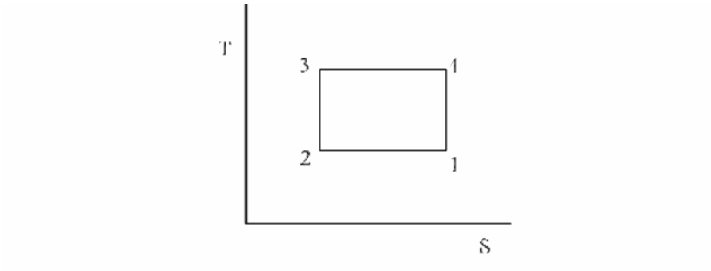

Figure 10.13.2. Ice cycle T-s diagram.

Example 10.13.1.

An Ice cycle as shown in Figure 10.13.1 is designed according to the following data:

p_1=100 kPa, T_1=300 K, p_2=200 kPa, and T_3=1200 K, $mdot_1$=1 kg/s.

Determine power produced, rate of heat added, power input, net power produced by the cycle, and cycle efficiency.

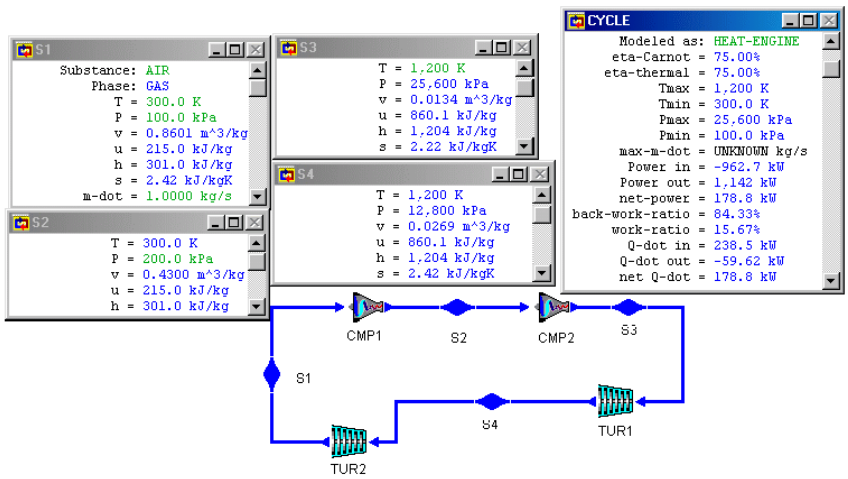

Figure E10.13.1. Ice cycle.

To solve this problem by CyclePad, we do the following steps:

(A) Build the Ice cycle as shown in Figure 10.13.1. Assuming the compressors and turbines are isothermal and isentropic.
(B) Input working fluid=air, p_1=100 kPa, T_1=300 K, and $mdot_1$=1 kg/s; p_2=200 kPa; and T_3=1200 K.

(C) Display results. The answers are: $Wdot_{in}$=-962.7 kW, $Wdot_{out}$=1142 kW, $Wdot_{net}$=178.8 kW, $Qdot_{in}$=238.5 kW, $Qdot_{out}$=-59.62 kW, and 0=75% as shown in Figure E10.13.2.

Homework 10.13. Ice Cycle

1. What is the concept of the Ice cycle?
2. An Ice cycle as shown in Figure 10.13.1 is designed according to the following data: p_1=100 kPa, T_1=290 K, p_2=200 kPa, and T_3=1400 K, $mdot_1$=1 kg/s.
   Determine power produced, rate of heat added, power input, net power produced by the cycle, and cycle efficiency.
   ANSWER: 1142 kW, 238.5 kW, -962.7 kW, 178.8 kW, 75%.
3. An Ice cycle as shown in Figure 10.13.1 is designed according to the following data: p_1=100 kPa, T_1=273 K, p_2=200 kPa, and T_3=1100 K, $mdot_1$=1 kg/s.
   Determine power produced, rate of heat added, power input, net power produced by the cycle, and cycle efficiency.
   ANSWER: 1048 kW, 218.6 kW, -884.1 kW, 164.3 kW, 75.18%.
4. An Ice cycle as shown in Figure 10.13.1 is designed according to the following data: p_1=100 kPa, T_1=273 K, p_2=400 kPa, and T_3=1100 K, $mdot_1$=0.14 kg/s.
   Determine power produced, rate of heat added, power input, net power produced by the cycle, and cycle efficiency.
   ANSWER: 177.4 kW, 61.21 kW, -131.4 kW, 46.028 kW, 75.18%.

10.14. DESIGN EXAMPLES

Typically, CyclePad's "build" mode allows the designer to select parts from one of its two inventory shops (closed system and open system) and connect them. Each component is clearly labeled with its input and output denoted by arrows. After connecting the parts in a complete cycle, the software will prompt the designer to stay in the "build" mode or move on to "analysis" mode. In the "analysis" mode, CyclePad combines user input and thermodynamic principles to numerically solve cycles. Here the designer selects the working fluid, component properties, and boundary conditions. CyclePad solves all possible variables as the designer adds conditions to the cycle. When all necessary entries have been made, the software will have solved for properties such as total heat input, total heat output, net power, thermal efficiency, etc. In the event that the designer enters conflicting conditions, CyclePad enters the "contradiction" mode. In this mode, the designer is told of a conflict and the program will not proceed until the contradiction is resolved. This is done in a pop-up window which shows all inputs that contributes to the error. In this way, the designer does not necessarily have to remove the entry that forced the contradiction, a very useful function indeed. If the designer wishes, CyclePad will explain what the contradiction is and how the current assumptions cannot be correct. This editing technique is very similar to the senior design engineer monitoring junior engineers who are not yet experienced enough to see the error in advance. The intelligent computer software CyclePad is a very effective tool in design cycles. Any complicated gas cycle can be easily designed and analyzed using

CyclePad. Optimization of design parameters of the cycle is demonstrated by the following examples.

Example 10.14.1.

A 4-stage reheat and 4-stage inter-cool Brayton air cycle as shown in Figure E10.14.1a has been designed by a junior engineer with the following design input information:

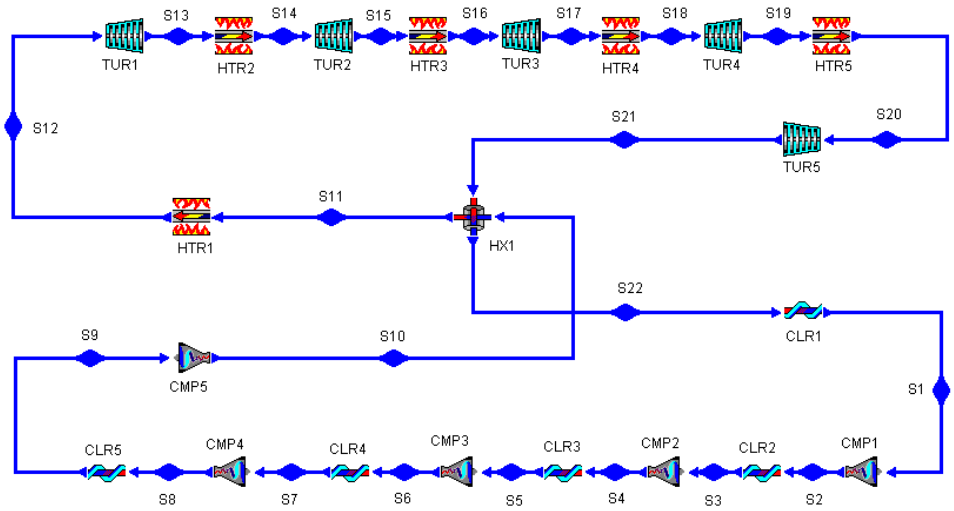

Figure E10.14.1a. 4-stage reheat and 4-stage inter-cool Brayton air cycle.

Design input information:

$p_1=p_{21}=p_{22}=100$ kPa, $p_2=p_3=p_{20}=p_{19}=200$ kPa, $p_4=p_5=p_{17}=p_{18}=400$ kPa, $p_6=p_7=p_{15}=p_{16}=600$ kPa, $p_8=p_9=p_{13}=p_{14}=800$ kPa, $p_{10}=p_{11}=p_{12}=1000$ kPa, $T_1=T_3=T_5=T_7=T_9=20$EC, $T_{12}=T_{14}=T_{16}=T_{18}=T_{20}=1200$EC, $T_{22}=400$EC, $mdot_1=1$ kg/s, $0_{tur1}=0_{tur2}=0_{tur3}=0_{tur4}=0_{tur5}=85\%$, and $0_{cmpr1}=0_{cmpr2}=0_{cmpr3}=0_{cmpr4}=0_{cmpr5}=85\%$.

The following output results as shown in Figure 10.14.1c are obtained from his design:

$0_{cycle}=55.16\%$, $Wdot_{input}=-589.8$ kW, $Wdot_{output}=-1334$ kW, $Wdot_{net\ output}=744.1$ kW, $Qdot_{add}=1349$ kW, $Qdot_{remove}=-605.0$ kW, $Wdot_{cmp1}=-75.79$ kW, $Wdot_{cmp2}=-75.79$ kW, $Wdot_{cmp3}=-42.50$ kW, $Wdot_{cmp4}=-29.65$ kW, $Wdot_{cmp5}=-366.1$ kW, $Wdot_{tur1}=645.9$ kW, $Wdot_{tur2}=99.14$ kW, $Wdot_{tur3}=137.4$ kW, $Wdot_{tur4}=225.7$ kW, $Wdot_{tur5}=225.7$ kW, $Qdot_{htr1}=241.0$ kW, $Qdot_{htr2}=645.9$ kW, $Qdot_{htr3}=99.14$ kW, $Qdot_{htr4}=137.4$ kW, $Qdot_{htr5}=225.7$ kW, $Qdot_{clr1}=-381.4$ kW, $Qdot_{clr2}=-75.79$ kW, $Qdot_{clr3}=-75.79$ kW, $Qdot_{clr4}=-42.50$ kW, $Qdot_{clr5}=-29.65$ kW, $T_{10}=384.8$EC, $T_{11}=959.8$EC, and $T_{21}=400$EC.

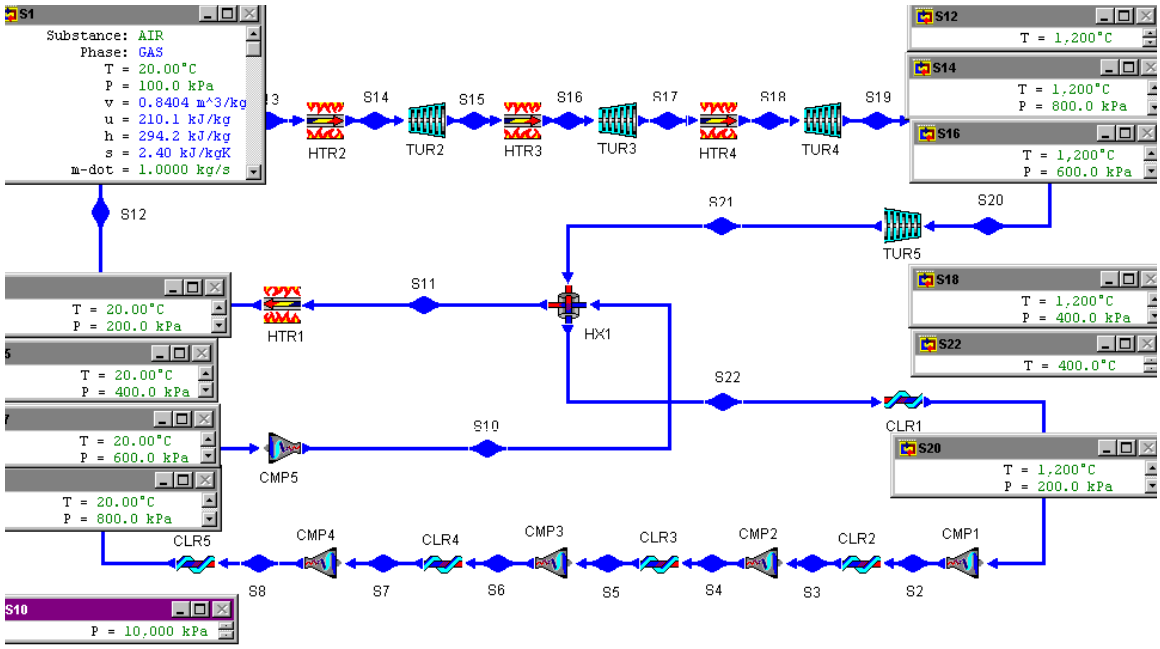

Figure E10.14.1b. Brayton air cycle design input.

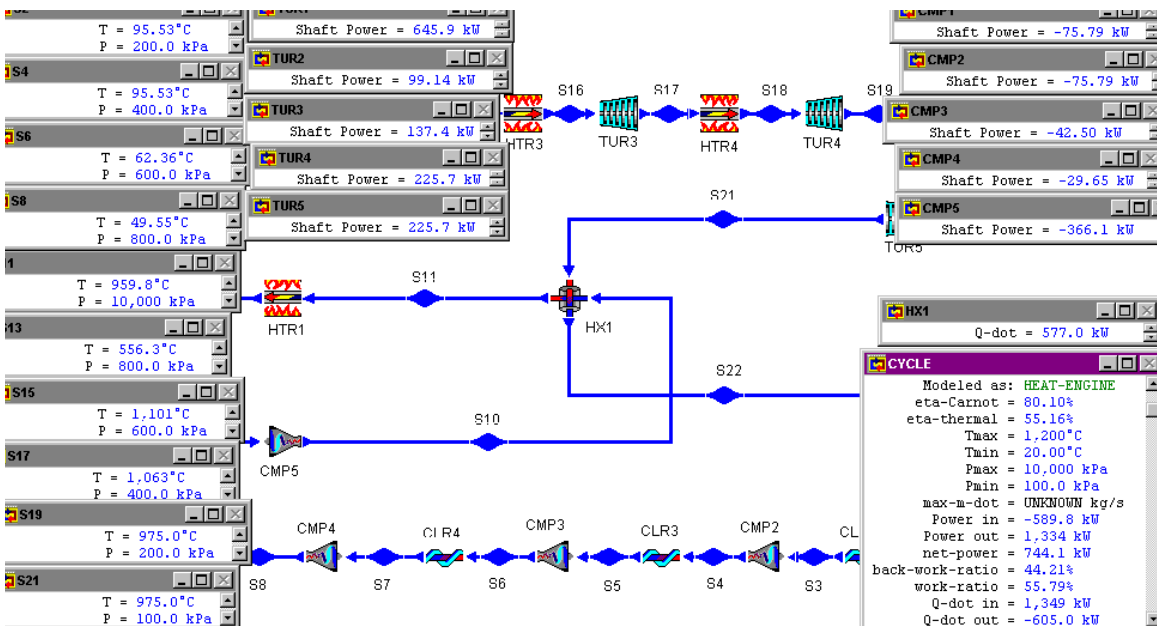

Figure E10.14.1c. Brayton air cycle design output.

The T-s diagram of the cycle is shown in Figure E10.14.1d.

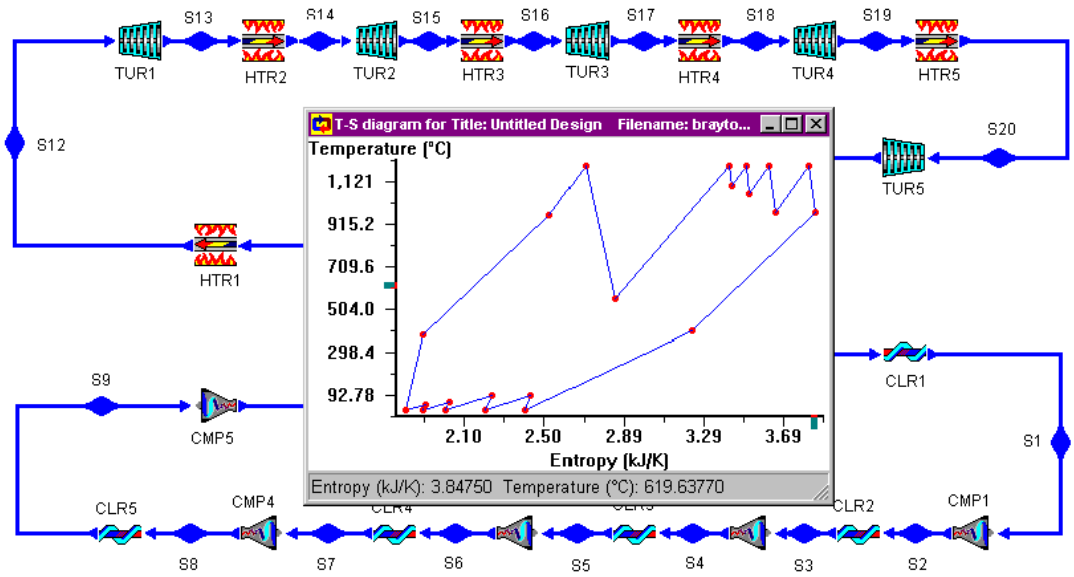

Figure E10.14.1d. Brayton air cycle T-s diagram.

Try to modify his design (use p_{16}, p_{18}, p_6 and p_8 as design parameters only) to get a better cycle thermal efficiency than his 0_{cycle}=55.16%.

The sensitivity analyses of 0_{cycle} versus p_{16}, and 0_{cycle} versus p_{18} are shown in the following diagrams. The optimization design values of p_{16} and p_{18} can be easily identified.

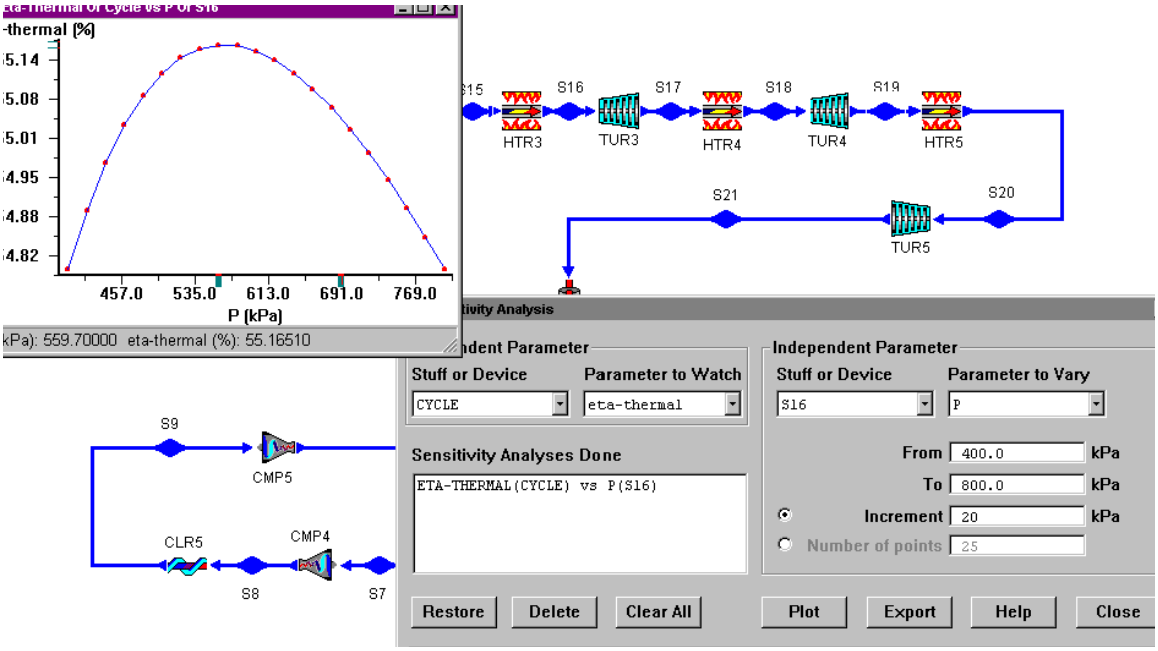

Figure E10.14.1e. Brayton air cycle design parameter optimization.

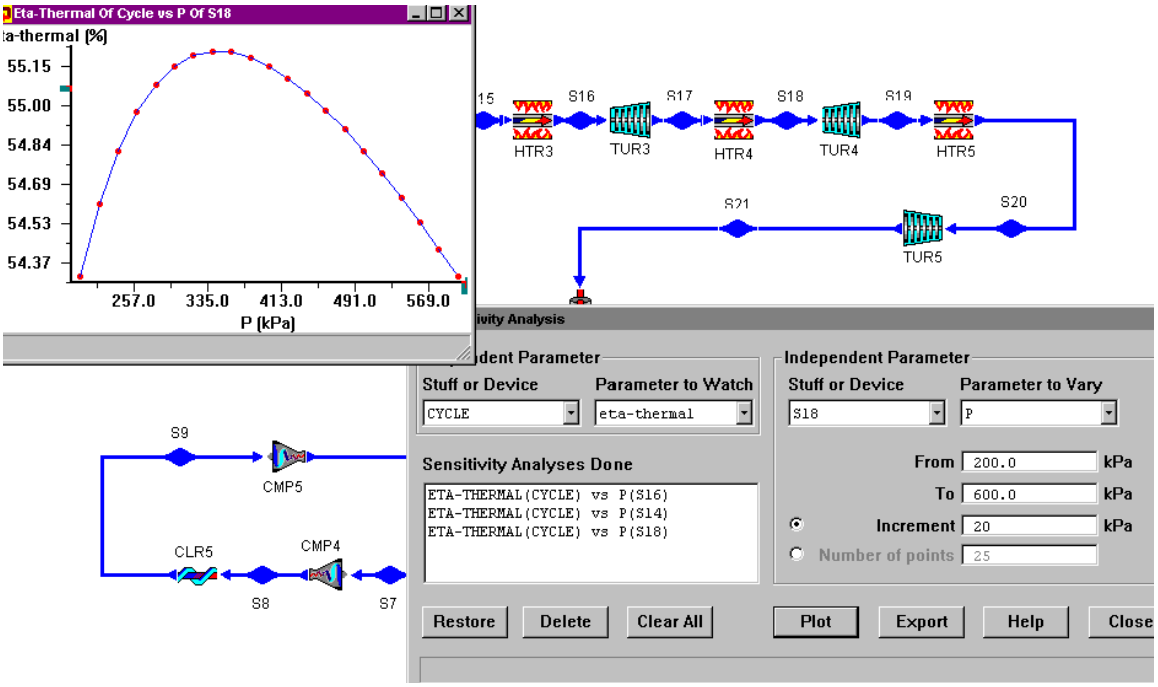

Figure E10.14.1f. Brayton air cycle design parameter optimization.

Homework 10.14. Design

1. A 4-stage reheat and 4-stage inter-cool Brayton air cycle as shown in Figure E10.14.1a has been designed by a junior engineer with the following design input information:
   Design input information:
   $p_1=p_{21}=p_{22}=100$ kPa, $p_2=p_3=p_{20}= p_{19}=200$ kPa, $p_4=p_5=p_{17}=p_{18}= 500$ kPa, $p_6=p_7=p_{15}= p_{16}=700$ kPa, $p_8=p_9=p_{13}=p_{14}=900$ kPa, $p_{10}=p_{11}=p_{12}=1100$ kPa, $T_1=T_3=T_5=T_7=T_9=20$EC, $T_{12}=T_{14}=T_{16}=T_{18}=T_{20}=1200$EC, $T_{22}=400$EC, $mdot_1=1$ kg/s, $0_{tur1}=0_{tur2}=0_{tur3}=0_{tur4}=0_{tur5}=83\%$, and $0_{cmpr1}=0_{cmpr2}=0_{cmpr3}=0_{cmpr4}=0_{cmpr5}=80\%$.
   Try to modify his design (use p_{16}, p_{18}, p_6 and p_8 as design parameters only) to get a better cycle thermal efficiency than his cycle efficiency.

10.15. SUMMARY

Heat engines that use gases as the working fluid in an open system model are treated in this chapter. The modern gas-turbine engine operates on the Brayton cycle. The basic Brayton cycle consists of an isentropic compression process, an isobaric combustion process, an isentropic expansion process, and an isobaric cooling process. The thermal efficiency of the basic Brayton cycle depends on the compression ratio across the compressor. The compression ratio is defined as $r_p= p_{compressor\ exit} /p_{compressor\ inlet}$. The performance of the basic Brayton cycle can be improved by split-shaft, and regeneration. The net work of the basic Brayton cycle can be improved by inter-cooling, and reheating. The power of the basic Brayton cycle can be controlled by air-bleed.

The Ericsson, Wicks and Ice cycles are modified Brayton cycles with many stages of inter-cooling and re-heat. It has the same efficiency of the Carnot cycle operating between the same temperature limits. The Braysson cycle is a combination of Brayton cycle and Ericsson cycle. The steam injection gas turbine cycle provides an increase in both power output and overall efficiency. The field cycle is a super-regenerative cycle. The Feher cycle is a cycle operating above the critical point of the working fluid.

Chapter 11

COMBINED CYCLE AND CO-GENERATION

11.1. COMBINED CYCLE

There are situations where it is desirable to combine several cycles in series in order to take advantage of a very wide temperature range or to utilize what would otherwise be waste heat to improve efficiency. Such a cycle is called *cascaded cycle*. A cascaded cycle made of three Rankine cycles in series is shown schematically in Figure 11.1.1. The cascaded cycle is made of three sub-cycles. Sub-cycle A, 1-2-3-4-1, is the topping cycle; Sub-cycle B, 5-6-7-8-5, is the middle cycle; and Sub-cycle C, 9-10-11-12-9, is the bottom cycle. The waste heat of the upstream cycle is the heat input of the downstream cycle. Since the net work output is equal to the sum of the three outputs and the heat input is that of the topping cycle alone, a substantial efficiency increase is possible.

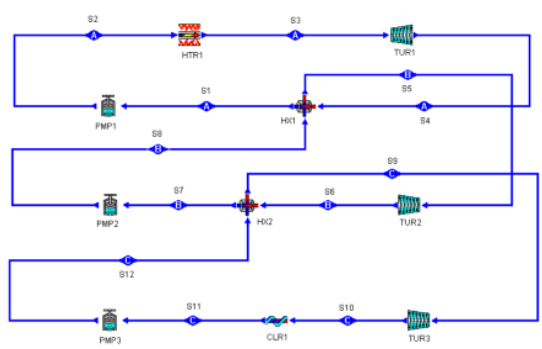

Figure 11.1.1. Cascaded cycle.

A cascaded cycle made of two cycles in series called *combined cycle* is shown schematically in Figure 11.1.2. The combined cycle is made of two sub-cycles. Sub-cycle A, 1-2-3-4-1, is the upstream topping cycle; and Sub-cycle B, 5-6-7-8-5, is the downstream bottom cycle. The waste heat of the upstream topping cycle is the heat added to the downstream bottom cycle. The power output is the sum of the output of the upstream topping cycle and the output of the downstream bottom cycle.

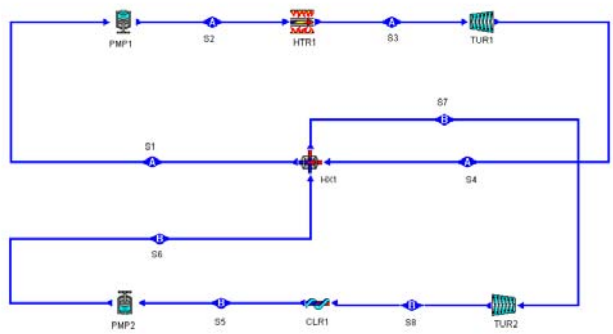

Figure 11.1.2. Combined cycle.

The energy flow of the combined cycle is shown in Figure 11.1.3.

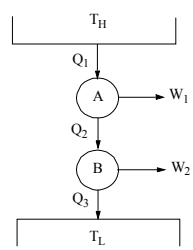

Figure 11.1.3. Combined cycle energy flow diagram.

The overall efficiency of the combined cycle is the total output work (W_1+W_2) divided by the heat input, Q_1. Referring to Figure 11.1.3, we have

$$0= (W_1+W_2)/Q_1, \tag{11.1.1}$$

$$W_1=0_A Q_1, \tag{11.1.2}$$

and

$$W_2=0_B Q_2, \tag{11.1.3}$$

Substituting W_1 and W_2 into Equation (11.1.1), the following efficiency expression is obtained.

$$0=1-(1-0_A)(1-0_B) \tag{11.1.4}$$

The combined cycle efficiency therefore may be substantially greater than the cycle efficiency of any of its components operating alone.

A numerical example is given in the following to illustrate the cycle analysis of the combined cycle.

Example 11.1.1.

A combined cycle made of two cycles is shown in Figure 11.1.2. The upstream topping cycle is a steam Rankine cycle and the downstream bottom cycle is an ammonia Rankine cycle. The following information is provided: steam boiler pressure=2 MPa, steam superheater temperature=400EC, steam condenser (heat exchanger) pressure=20 kPa, ammonia boiler (heat exchanger) pressure=1200 kPa, ammonia condenser pressure=800 kPa, and mass flow rate of steam is 1 kg/s.

Determine the total pump power input, total turbine power output, rate of heat added, rate of heat removed, cycle efficiency, and mass flow rate of ammonia.

To solve this problem with CyclePad, we take the following steps:

1. Build as shown in Figure 11.1.2
2. Analysis
   (A) Assume a process each for the seven devices: (a) pumps as adiabatic with 100% efficiency, (b) turbines as adiabatic with 100% efficiency, (c) heat exchanger as isobaric on both cold-side and hot-side, (d) ammonia condenser as isobaric, and (d) steam boiler as isobaric.
   (B) Input the given information: (a) working fluid of cycle B is ammonia, and working fluid of cycle A is water, (b) the inlet pressure and quality of the ammonia pump are 800 kPa and 0, (c) the inlet temperature and pressure of the steam turbine are 400EC and 2000 kPa, (d) the inlet quality and pressure of the ammonia turbine are 1 and 1200 kPa, (e) the inlet pressure and quality of the water pump are 20 kPa and 0, and (f) the steam mass flow rate is 1 kg/s.
3. Display result

The answers are: combined cycle–power input=-13.28 kW, power output=988.0 kW, net power output=974.7 kW, rate of heat added=2994 kW, rate of heat removed=-2019 kW, 0=32.56%.

Topping steam cycle–power input=-2.02 kW, power output=898.5 kW, net power output=896.5 kW, rate of heat added=2994 kW, rate of heat removed=-2098 kW, 0=29.94%.

Bottom ammonia cycle–power input=-11.26 kW, power output=89.53 kW, net power output=78.27 kW, rate of heat added=2098 kW, rate of heat removed=-2019 kW, 0=3.73%, mass rate flow=1.75 kg/s.

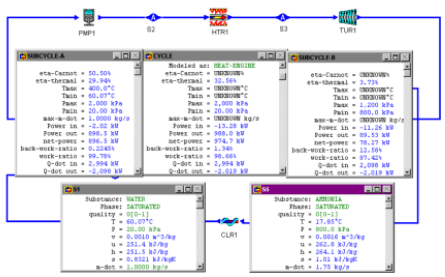

Figure E11.1.1. Combined Rankine cycle.

Example 11.1.2.

Figure E11.1.2a depicts a combined plant in which a closed Brayton helium nuclear plant releases heat to a recovery steam generator, which supplies heat to a Rankine steam plant. The generator is provided with a gas burner for supplementary additional heat when the demand of steam power is high. The Rankine plant is a regenerative cycle.

The data given below correspond approximately to the design conditions for the combined plant.

p_1=100 kPa, T_1=30EC, p_2=800 kPa, T_3=1400EC, T_5=200EC, p_6=5 kPa, x_6=0, p_8=1000 kPa, x_8=0, p_9=6000 kPa, T_{10}=400EC, $mdot_{10}$=1 kg/s, T_{11}=500EC, and $0_{compressor}$=$0_{turbine}$=0_{pump}=100%.

Determine the power required by the compressor, power required by pump #1 and #2, power produced by turbine #1, power produced by turbine #2, produced by turbine #3, rate of heat added by the nuclear reactor, net power produced by the Brayton gas-turbine plant, net power produced by the Rankine plant, rate of heat removed by cooler #1, rate of heat removed by cooler #2, rate of heat exchanged in the heat exchanger, rate of heat added in the gas burner, mass rate flow of helium in the Brayton cycle, mass rate flow of steam extracted to the feed water heater (mixing chamber), cycle efficiency of the Brayton plant, cycle efficiency of the Rankine plant, and cycle efficiency of the combined Brayton-Rankine plant.

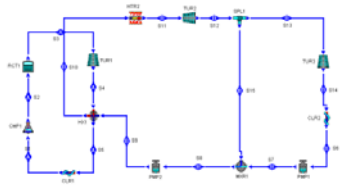

Figure E11.1.2a. Combined Rankine cycle.

To solve this problem with CyclePad, we take the following steps:

1. Build as shown in Figure E11.1.2a
2. Analysis
   (A) Assume a process each for the twelve devices: (a) pumps as adiabatic with 100% efficiency, (b) turbines as adiabatic with 100% efficiency, (c) heat exchanger as isobaric on both cold-side and hot-side, (d) nuclear reactor, mixing chamber, heater, and coolers as isobaric, and (e) splitter as iso-parametric.
   (B) Input the given information: (a) working fluid of cycle A is helium, and working fluid of cycle B is water, (b) p_1=100 kPa, T_1=30EC, p_2=800 kPa, T_3=1400EC, T_5=200EC, p_6=5 kPa, x_6=0, p_8=1000 kPa, x_8=0, p_9=6000 kPa, T_{10}=400EC, $mdot_{10}$=1 kg/s, and T_{11}=500EC.
3. Display result: $Wdot_{compressor}$=-3756 kW, $Wdot_{pump\ \#1\ and\ \#2}$=-6.46 kW, $Wdot_{turbine\#1}$=9001 kW, $Wdot_{turbine\#2}$=512.7 kW, $Wdot_{turbine\#3}$=637.5 kW, $Qdot_{reactor}$=9270 kW, $Wdot_{nee\ Brayton}$=5245 kW, $Wdot_{net\ Rankine}$=1134 kW, $Qdot_{cooler\#1}$=-1616 kW, $Qdot_{cooler\#2}$=-1520 kW, $Qdot_{HX}$=2408 kW, $Qdot_{gas\ burner}$=245.3 kW, $mdot_{helium}$=1.84 kg/s, $mdot_{15}$=0.2245 kg/s, $0_{Brayton}$=5245/9270=56.58 %, $0_{Rankine}$=1134/2654=42.73 %, and $0_{combined}$=(5245+1134)/(9270+245.3)=67.04 %.

Combined cycle is designed to gain maximum efficiency from the primary heat source. In most cases, both cycles are used for the same purpose-usually to generate electricity. The major combined-cycle options currently under development include open-cycle gas turbines, closed-cycle turbines, fuel cells, and magneto-hydro-dynamics with vapor cycles. Other combined cycles include Diesel/Rankine cycle (Reference: Boretz, J.E., Rankine engine compounding of Diesel engines, *Proceedings of the Intersociety Energy Conversion Engineering Conference*, v2, pp193-197, 1990), Dual gas turbine combined cycle (Reference: Weston, K.C., *Proceedings of the Intersociety Energy Conversion Engineering Conference*, v1, pp955-958, 1993), etc.

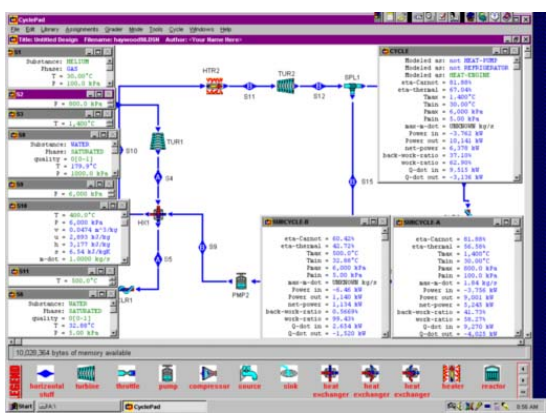

Figure E11.1.2b. Combined Rankine cycle.

Homework 11.1. Combined Cycle

1. What is a combined cycle?

2. What is the heat input to the whole combined cycle?
3. What is the total work output of the whole combined cycle?
4. Is the efficiency of the combined cycle better than any of the individual efficiency of the cycles which made the combined cycle? Why?
5. Redo Example 11.1.2 without the gas burner. Find the power input, power output, net power output, rate of heat added, and cycle efficiency for (A) the nuclear power cycle, (B) the steam cycle and (C) the combined cycle.
   ANSWER: (A) -3756 kW, 9001 kW, 5245 kW, 9270 kW, 56.58%; (B) -6.45 kW, 1001 kW, 995.0 kW, 2408 kW, 41.31%; (C) -3762 kW, 10002 kW, 6240 kW, 9270 kW, 67.31%.
6. Figure E11.1.2a depicts a combined plant in which a closed Brayton helium nuclear plant releases heat to a recovery steam generator, which supplies heat to a Rankine steam plant. The generator is provided with a gas burner for supplementary additional heat when the demand of steam power is high. The Rankine plant is a regenerative cycle.

   The data given below correspond approximately to the design conditions for the combined plant.

   p_1=100 kPa, T_1=30EC, p_2=800 kPa, T_3=1400EC, T_5=200EC, p_6=5 kPa, x_6=0, p_8=1000 kPa, x_8=0, p_9=6000 kPa, T_{10}=400EC, $mdot_{10}$=1 kg/s, T_{11}=400EC, $0_{helium\ uurbine}$=85%, and $0_{compressor}$=$0_{steam\ t\ urbine}$=0_{pump}=100%.

   Determine the power input, power output, net power output, rate of heat added, and cycle efficiency for (A) the nuclear power cycle, (B) the steam cycle and (C) the combined cycle.

   ANSWER: (A) -2407 kW, 4902 kW, 2496 kW, 3444 kW, 42.02%; (B) -6.45 kW, 1001 kW, 995.0 kW, 2408 kW, 41.31%; (C) -2413 kW, 5904 kW, 3491 kW, 5940 kW, 58.77%.
7. Figure E11.1.2a depicts a combined plant in which a closed Brayton helium nuclear plant releases heat to a recovery steam generator, which supplies heat to a Rankine steam plant. The generator is provided with a gas burner for supplementary additional heat when the demand of steam power is high. The Rankine plant is a regenerative cycle.

   The data given below correspond approximately to the design conditions for the combined plant.

   p_1=100 kPa, T_1=30EC, p_2=800 kPa, T_3=1400EC, T_5=200EC, p_6=5 kPa, x_6=0, p_8=1000 kPa, x_8=0, p_9=6000 kPa, T_{10}=400EC, $mdot_{10}$=1 kg/s, T_{11}=500EC, $0_{helium\ turbine}$=$0_{steam\ t\ urbine}$= 85%, and $0_{compressor}$=0_{pump}=100%.

   Determine the power input, power output, net power output, rate of heat added, and cycle efficiency for (A) the nuclear power cycle, (B) the steam cycle and (C) the combined cycle.

   ANSWER: (A) -2407 kW, 4902 kW, 2496 kW, 5940 kW, 42.02%; (B) -6.46 kW, 1140 kW, 1134 kW, 2654 kW, 42.72%; (C) -2413 kW, 6043 kW, 3629 kW, 6185 kW, 58.68%.
8. Figure E11.1.2a depicts a combined plant in which a closed Brayton helium nuclear plant releases heat to a recovery steam generator, which supplies heat to a Rankine steam plant. The generator is provided with a gas burner for supplementary

additional heat when the demand of steam power is high. The Rankine plant is a regenerative cycle.

The data given below correspond approximately to the design conditions for the combined plant.

p_1=100 kPa, T_1=30EC, p_2=800 kPa, T_3=1400EC, T_5=200EC, p_6=5 kPa, x_6=0, p_8=1000 kPa, x_8=0, p_9=6000 kPa, T_{10}=400EC, $mdot_{10}$=1 kg/s, T_{11}=550EC, $0_{helium\ turbine}$=$0_{steam\ t\ urbine}$= 85%, and $0_{compressor}$=0_{pump}=100%.

Determine the power input, power output, net power output, rate of heat added, and cycle efficiency for (A) the nuclear power cycle, (B) the steam cycle and (C) the combined cycle.

ANSWER: (A) -2407 kW, 4902 kW, 2496 kW, 5940 kW, 42.02%; (B) -6.48 kW, 1059 kW, 1052 kW, 2772 kW, 37.96%; (C) -2413 kW, 5961 kW, 3548 kW, 6303 kW, 56.29%.

9. Figure E11.1.2a depicts a combined plant in which a closed Brayton helium nuclear plant releases heat to a recovery steam generator, which supplies heat to a Rankine steam plant. The generator is provided with a gas burner for supplementary additional heat when the demand of steam power is high. The Rankine plant is a regenerative cycle.

   The data given below correspond approximately to the design conditions for the combined plant.

   p_1=15 psia, T_1=90EF, p_2=120 psia, T_3=2400EF, T_5=400EF, p_6=1 psia, x_6=0, p_8=150 psia, x_8=0, p_9=800 psia, T_{10}=750EF, $mdot_{10}$=1.2 lbm/s, T_{11}=1000EF,$0_{all\ turbine}$=85%, and $0_{compressor}$=0_{pump}=100%.

   Determine the power input, power output, net power output, rate of heat added, and cycle efficiency for (A) the nuclear power cycle, (B) the steam cycle and (C) the combined cycle.

   ANSWER: (A) -2016 hp, 3871 hp, 1855 hp, 3171 Btu/s, 41.35%; (B) -4.34 hp, 737.5 hp, 733.2 hp, 1415 Btu/s, 36.63%; (C) -2020 hp, 4609 hp, 2588 hp, 3343 Btu/s, 54.73%.

10. A combined cycle made of two cycles. The upstream topping cycle is a reheated air Brayton closed cycle with a pre-cooler and the downstream bottom cycle is a steam Rankine cycle. The following information is provided:

    air entering the isobaric precooler at 1000 bar, 373.1 K and 1 kg/s; air leaving the preheater at 293.1 K; the adiabatic compressor is 85% efficient; the adiabatic high-pressure turbine efficiency is 85%; the adiabatic low-pressure turbine efficiency is 85%;air leaving the isobaric combustion chamber at 16 bar and 1023 K; air leaving the isobaric reheater at 3 bar;

    steam leaving the isobaric heat exchangerer between the two cycles at 80 bar and 673.1 K; steam entering the isentropic pump at 0.16 bar as saturated liquid; the adiabatic steam turbine efficiency is 85%.

    Determine the mass flow rate of steam in the Rankine cycle, rate of heat added, total power input, total power output, total net power output, and cycle efficiency of the combined cycle.

    ANSWER: 0.1439 kg/s, 646.1 kW, -419.3 kW, 697.7 kW, 278.4 kW, 43.09%.

11. A combined cycle made of two cycles. The upstream topping cycle is a reheated air Brayton closed cycle with a pre-cooler and the downstream bottom cycle is a steam Rankine cycle. The following information is provided:

    air entering the isobaric precooler at 1 bar, 350 K and 1 kg/s; air leaving the preheater at 293.1 K; the adiabatic compressor is 85% efficient; the adiabatic high-pressure turbine efficiency is 85%; the adiabatic low-pressure turbine efficiency is 85%;air leaving the isobaric combustion chamber at 16 bar and 1100 K; air leaving the isobaric reheater at 3 bar;

    steam leaving the isobaric heat exchangerer between the two cycles at 80 bar and 673.1 K; steam entering the isentropic pump at 0.16 bar as saturated liquid; the adiabatic steam turbine efficiency is 85%.

    Determine the mass flow rate of steam in the Rankine cycle, rate of heat added, total power input, total power output, total net power output, and cycle efficiency of the combined cycle.

    ANSWER: 0.1725 kg/s, 748.2 kW, -419.5 kW, 766.2 kW, 346.7 kW, 46.35%.

12. A combined cycle made of two cycles. The upstream topping cycle is a reheated air Brayton closed cycle with a pre-cooler and the downstream bottom cycle is a steam Rankine cycle. The following information is provided:

    air entering the isobaric precooler at 1 bar, 350 K and 1 kg/s; air leaving the preheater at 293.1 K; the adiabatic compressor is 85% efficient; the adiabatic high-pressure turbine efficiency is 80%; the adiabatic low-pressure turbine efficiency is 80%;air leaving the isobaric combustion chamber at 16 bar and 1100 K; air leaving the isobaric reheater at 3 bar;

    steam leaving the isobaric heat exchangerer between the two cycles at 80 bar and 673.1 K; steam entering the isentropic pump at 0.16 bar as saturated liquid; the adiabatic steam turbine efficiency is 80%.

    Determine the mass flow rate of steam in the Rankine cycle, rate of heat added, total power input, total power output, total net power output, and cycle efficiency of the combined cycle.

    ANSWER: 0.1776 kg/s, 727.2 kW, -419.5 kW, 725.6 kW, 306. kW, 42.08%.

13. A combined cycle made of two cycles. The upstream topping cycle is a reheated air Brayton closed cycle with a pre-cooler and the downstream bottom cycle is a steam Rankine cycle. The following information is provided:

    air entering the isobaric preheater at 15 psia, 180EF and 0.2 lbm/s; air leaving the precooler at 68EF; the adiabatic compressor is 85% efficient; the adiabatic high-pressure turbine efficiency is 80%; the adiabatic low-pressure turbine efficiency is 80%;air leaving the isobaric combustion chamber at 230 psia and 1500EF; air leaving the isobaric reheater at 50 psia;

    steam leaving the isobaric heat exchangerer between the two cycles at 1000 psia and 700EF; steam entering the isentropic pump at 3 psia as saturated liquid; the adiabatic steam turbine efficiency is 80%.

    Determine the mass flow rate of steam in the Rankine cycle, rate of heat added, total power input, total power output, total net power output, and cycle efficiency of the combined cycle.

    ANSWER: 0.0342 lbm/s, 60 Btu/s, -50.12 hp, 85.14 hp, 35.02 hp, 41.26%.

14. A combined cycle made of two cycles. The upstream topping cycle is a reheated air Brayton closed cycle with a pre-cooler and the downstream bottom cycle is a steam Rankine cycle. The following information is provided:

    air entering the isobaric preheater at 15 psia, 180EF and 0.2 lbm/s; air leaving the precooler at 68EF; the adiabatic compressor is 85% efficient; the adiabatic high-pressure turbine efficiency is 80%; the adiabatic low-pressure turbine efficiency is 80%;air leaving the isobaric combustion chamber at 300 psia and 1200EF; air leaving the isobaric reheater at 50 psia;

    steam leaving the isobaric heat exchangerer between the two cycles at 1000 psia and 700EF; steam entering the isentropic pump at 3 psia as saturated liquid; the adiabatic steam turbine efficiency is 80%.

    Determine the mass flow rate of steam in the Rankine cycle, rate of heat added, total power input, total power output, total net power output, and cycle efficiency of the combined cycle.

    ANSWER: 0.0251 lbm/s, 39.48 Btu/s, -57.09 hp, 74.35 hp, 17.26 hp, 30.9%.

15. A combined cycle made of two cycles. The upstream topping cycle is a reheated air Brayton closed cycle with a pre-cooler and the downstream bottom cycle is a steam Rankine cycle. The following information is provided:

    air entering the isobaric preheater at 15 psia, 180EF and 0.2 lbm/s; air leaving the precooler at 68EF; the adiabatic compressor is 85% efficient; the adiabatic high-pressure turbine efficiency is 85%; the adiabatic low-pressure turbine efficiency is 85%;air leaving the isobaric combustion chamber at 300 psia and 1200EF; air leaving the isobaric reheater at 50 psia; steam leaving the isobaric heat exchangerer between the two cycles at 1000 psia and 700EF;

    steam entering the isentropic pump at 3 psia as saturated liquid; the adiabatic steam turbine efficiency is 85%.

    Determine the mass flow rate of steam in the Rankine cycle, rate of heat added, total power input, total power output, total net power output, and cycle efficiency of the combined cycle.

    ANSWER: 0.0241 lbm/s, 41.08 Btu/s, -57.09 hp, 78.51 hp, 21.42 hp, 36.86%.

11.2. TRIPLE CYCLE IN SERIES

A cascaded cycle made of three cycles in series called *triple cycle* is shown schematically in Figure 11.2.1. The combined cycle is made of three sub-cycles. Sub-cycle A, 1-2-3-4-5, is the upstream topping cycle; Sub-cycle C, 6-7-8-9-6, is the mid cycle, and Sub-cycle B, 10-11-12-13-10, is the downstream bottom cycle. A part of the waste heat of the upstream topping cycle is the heat added to the mid cycle, and the waste heat of the mid cycle is the heat added to the downstream bottom cycle. The power output is the sum of the output of the upstream topping cycle, the output of the mid cycle, and the output of the downstream bottom cycle.

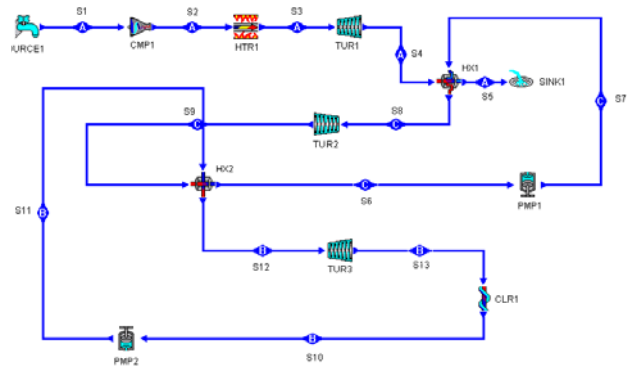

Figure 11.2.1. Triple cycle.

The energy flow of the combined cycle is shown in Figure 11.2.2.

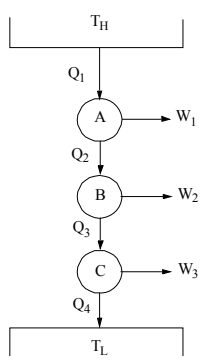

Figure 11.2.2. Triple cycle in series energy flow diagram.

The overall efficiency of the triple cycle is the total output work (W_1+W_2+W_3) divided by the heat input, Q_1. Referring to Figure 11.2.2, we have

$$0= (W_1+W_2+W_3)/Q_1 \tag{11.2.1}$$

$$W_1=0_AQ_1 \tag{11.2.2}$$

$$W_2=0_BQ_2 \tag{11.2.3}$$

and

$$W_3=0_CQ_3 \tag{11.2.4}$$

Substituting W_1,W_2 and W_3 into Equation (11.2.1), the following efficiency expression is obtained.

$$0=1-(1-0_A)(1-0_B)(1-0_c) \tag{11.2.5}$$

The triple cycle efficiency therefore may be substantially greater than the cycle efficiency of any of its components operating alone.

A numerical example is given in the following to illustrate the cycle analysis of the triple cycle in series.

Example 11.2.1.

Figure 11.2.1 depicts a triple cycle in which an open air Brayton plant releases heat to a recovery steam generator, which supplies heat to a Rankine steam plant. The Rankine steam plant releases heat to a recovery R-12 generator, which supplies heat to a Rankine R-12 plant. The data given below correspond approximately to the design conditions for the triple plant.

p_1=101.3 kPa, T_1=15EC, p_2=8 p_1, T_3=1200EC, p_4=101.3 kPa, T_5=450EC, p_6=20 kPa, x_6=0, T_7=60.1 EC, p_8=2000 kPa, T_8=400EC, x_{10}=0, p_{10}=500 kPa, T_{10}=400EC, p_{12}=900 kPa, x_{12}=1, $mdot_1$=1 kg/s, and $0_{compressor}=0_{turbine}=0_{pump}$=100%.

Determine the power required by the compressor, power required by pump #1 and #2, power produced by turbine #1, power produced by turbine #2, produced by turbine #3, rate of heat added to the Brayton cycle, net power produced by the Brayton gas-turbine plant, net power produced by the steam Rankine plant, rate of heat exchanged in the heat exchanger #1, rate of heat added to the R-12 Rankine plant, mass rate flow of air in the Brayton cycle, mass rate flow of steam in the Rankine steam plant, mass rate flow of R-12 in the Rankine R-12 plant, cycle efficiency of the Brayton plant, cycle efficiency of the steam Rankine plant, cycle efficiency of the R-12 Rankine plant, and cycle efficiency of the triple plant.

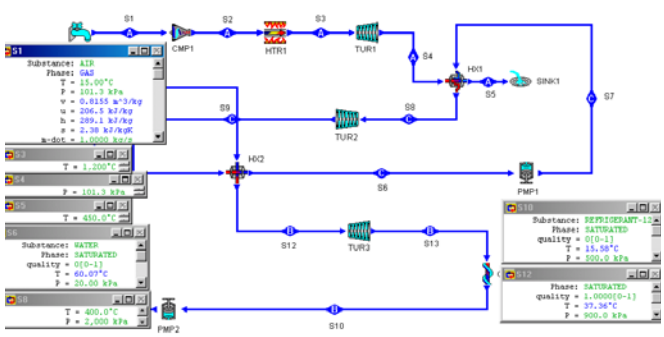

Figure E11.2.1a. Input information.

To solve this problem with CyclePad, we take the following steps:

1. Build as shown in Figure 11.2.1.
2. Analysis
   (A) Assume a process each for the devices: (a) pumps as adiabatic with 100% efficiency, (b) turbines as adiabatic with 100% efficiency, (c) heat exchanger as isobaric on both cold-side and hot-side, and (d) heater, and coolers as isobaric.

(B) Input the given information as shown in Figure E11.2.1a: (a) working fluid of cycle A is air, working fluid of cycle B is R-12, and working fluid of cycle C is water, (b) p_1=101.3 kPa, T_1=15EC, p_2=8 p_1, T_3=1200EC, p_4=101.3 kPa, T_5=450EC, p_6=20 kPa, x_6=0, T_7=60.1 EC, p_8=2000 kPa, T_8=400EC, x_{10}=0, p_{10}=500 kPa, T_{10}=400EC, p_{12}=900 kPa, x_{12}=1, and $mdot_1$=1 kg/s.

3. Display result The answers shown in Figure E11.2.1b are: $Wdot_{compressor\ \#1}$=-234.6 kW, $Wdot_{pump\ \#1}$=-0.0609 kW,$Wdot_{pump\ \#2}$=-0.9171 kW, $Wdot_{turbine\#1}$=662.2 kW, $Wdot_{turbine\#2}$=27.13 kW, $Wdot_{turbine\#3}$=4.32 kW, $Qdot_{HTR\ \#1}$=954.4 kW, $Wdot_{net\ Brayton}$=427.5 kW, $Wdot_{net\ steam\ Rankine}$=27.07 kW, $Wdot_{net\ R12\ Rankine}$=3.40 kW, $Wdot_{net\ triple}$=458.0 kW, $Qdot_{cooler\#1}$=-59.93 kW, $mdot_{steam}$=0.0302 kg/s, $mdot_{R12}$=0.4237 kg/s, $0_{Brayton}$=44.8 %, $0_{steam\ Rankine}$=29.94 %, $0_{R12\ Rankine}$=5.38 %, and 0_{triple}=47.99 %.

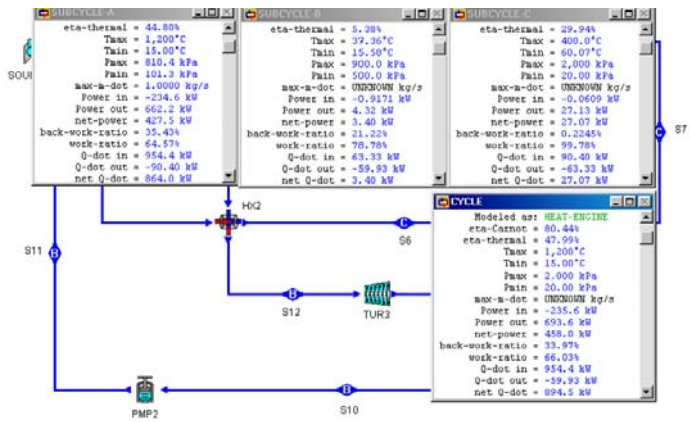

Figure E11.2.1b. Output information.

Homework 11.2. Triple Cycle in Series

1. Redo Example 11.2.1 with $0_{compressor}$=$0_{turbine}$=83% and 0_{pump}=100%. Find the power input, power output, net power output, rate of heat added, and cycle efficiency of the triple cycle.
   ANSWER: -285.0 kW, 608.8 kW, 323.8 kW, 906.4 kW, 35.72%.
2. Figure 11.2.1 depicts a triple cycle in which an open air Brayton plant releases heat to a recovery steam generator, which supplies heat to a Rankine steam plant. The Rankine steam plant releases heat to a recovery R-12 generator, which supplies heat to a Rankine R-12 plant. The data given below correspond approximately to the design conditions for the triple plant.
   p_1=101.3 kPa, T_1=15EC, p_2=10 p_1, T_3=1200EC, p_4=101.3 kPa, T_5=450EC, p_6=20 kPa, x_6=0, T_7=60.1 EC, p_8=2000 kPa, T_8=400EC, x_{10}=0, p_{10}=500 kPa, T_{10}=400EC, p_{12}=900 kPa, x_{12}=1, $mdot_1$=1 kg/s, and $0_{compressor}$=$0_{turbine}$=83% and 0_{pump}=100%.
   Find the power input, power output, net power output, rate of heat added, and cycle efficiency of the triple cycle.
   ANSWER: -326.1 kW, 638.4 kW, 312.3 kW, 864.8 kW, 36.12%.

3. Figure 11.2.1 depicts a triple cycle in which an open air Brayton plant releases heat to a recovery steam generator, which supplies heat to a Rankine steam plant. The Rankine steam plant releases heat to a recovery R-12 generator, which supplies heat to a Rankine R-12 plant. The data given below correspond approximately to the design conditions for the triple plant.
   p_1=101.3 kPa, T_1=15EC, p_2=10 p_1, T_3=1200EC, p_4=101.3 kPa, T_5=450EC, p_6=20 kPa, x_6=0, T_7=60.1 EC, p_8=2000 kPa, T_8=400EC, x_{10}=0, p_{10}=500 kPa, T_{10}=400EC, p_{12}=900 kPa, x_{12}=1, $mdot_1$=1 kg/s, and $0_{compressor}$=$0_{turbine}$=85% and 0_{pump}=100%.
   Find the power input, power output, net power output, rate of heat added, and cycle efficiency of the triple cycle.
   ANSWER: -318.3 kW, 649.5 kW, 331.2 kW, 872.5 kW, 37.96%.
4. Figure 11.2.1 depicts a triple cycle in which an open helium Brayton plant releases heat to a recovery steam generator, which supplies heat to a Rankine steam plant. The Rankine steam plant releases heat to a recovery R-12 generator, which supplies heat to a Rankine R-12 plant. The data given below correspond approximately to the design conditions for the triple plant.
   p_1=101.3 kPa, T_1=15EC, p_2=10 p_1, T_3=1200EC, p_4=101.3 kPa, T_5=450EC, p_6=20 kPa, x_6=0, T_7=60.1 EC, p_8=2000 kPa, T_8=400EC, x_{10}=0, p_{10}=500 kPa, T_{10}=400EC, p_{12}=900 kPa, x_{12}=1, $mdot_1$=1 kg/s, and $0_{compressor}$=$0_{turbine}$=85% and 0_{pump}=100%.
   Find the power input, power output, net power output, rate of heat added, and cycle efficiency of the triple cycle.
   ANSWER: -2665 kW, 3901 kW, 1236 kW, 3469 kW, 35.62%.
5. Figure 11.2.1 depicts a triple cycle in which an open helium Brayton plant releases heat to a recovery steam generator, which supplies heat to a Rankine steam plant. The Rankine steam plant releases heat to a recovery ammonia generator, which supplies heat to a Rankine ammonia plant. The data given below correspond approximately to the design conditions for the triple plant.
   p_1=101.3 kPa, T_1=15EC, p_2=10 p_1, T_3=1200EC, p_4=101.3 kPa, T_5=450EC, p_6=20 kPa, x_6=0, T_7=60.1 EC, p_8=2000 kPa, T_8=400EC, x_{10}=0, p_{10}=500 kPa, T_{10}=400EC, p_{12}=900 kPa, x_{12}=1, $mdot_1$=1 kg/s, and $0_{compressor}$=$0_{turbine}$=85% and 0_{pump}=100%.
   Find the power input, power output, net power output, rate of heat added, and cycle efficiency of the triple cycle.
   ANSWER: -2665 kW, 3901 kW, 1236 kW, 3469 kW, 35.62%.
6. Figure 11.2.1 depicts a triple cycle in which an open helium Brayton plant releases heat to a recovery steam generator, which supplies heat to a Rankine steam plant. The Rankine steam plant releases heat to a recovery ammonia generator, which supplies heat to a Rankine ammonia plant. The data given below correspond approximately to the design conditions for the triple plant.
   p_1=14.7 psia, T_1=60EF, p_2=10 p_1, T_3=2100EF, p_4=14.7 psia, T_5=750EF, p_6=3 psia, x_6=0, p_8=300 psia, T_8=720EF, x_{10}=0, p_{10}=70 psia, p_{12}=130 psia, x_{12}=1, $mdot_1$=1.5 lbm/s, and $0_{compressor}$=$0_{turbine}$=85% and 0_{pump}=100%.
   Find the power input, power output, net power output, rate of heat added, and cycle efficiency of the triple cycle.
   ANSWER: -2437 hp, 3472 hp, 1035 hp, 2062 Btu/s, 35.47%.

7. Figure 11.2.1 depicts a triple cycle in which an open helium Brayton plant releases heat to a recovery steam generator, which supplies heat to a Rankine steam plant. The Rankine steam plant releases heat to a recovery ammonia generator, which supplies heat to a Rankine ammonia plant. The data given below correspond approximately to the design conditions for the triple plant.
   p_1=14.7 psia, T_1=60EF, p_2=9 p_1, T_3=2100EF, p_4=14.7 psia, T_5=750EF, p_6=3 psia, x_6=0, p_8=300 psia, T_8=720EF, x_{10}=0, p_{10}=70 psia, p_{12}=130 psia, x_{12}=1, mdot$_1$=1.5 lbm/s, and $0_{compressor}$=$0_{turbine}$=85% and 0_{pump}=100%.
   Find the power input, power output, net power output, rate of heat added, and cycle efficiency of the triple cycle.
   ANSWER: -2271 hp, 3403 hp, 1132 hp, 2180 Btu/s, 36.70%.

11.3. TRIPLE CYCLE IN PARALLEL

A cycle made of three cycles in parallel is shown schematically in Figure 11.3.1. The triple cycle is made of three sub-cycles. Sub-cycle A, 1-2-3-4-5-6, is the upstream topping open gas turbine cycle; Sub-cycle C, 7-8-9-10-7 and Sub-cycle B, 11-12-13-14-11, are the downstream parallel bottom cycles. A part of the waste heat of the upstream topping cycle is the heat added to the Sub-cycle C, and another part of the waste heat of the upstream topping cycle is the heat added to the Sub-cycle B. The power output is the sum of the output of Sub-cycle A, Sub-cycle B, and Sub-cycle C. The overall efficiency of the triple cycle in parallel is the total output work ($Wnet,_A$+$W_{net,B}$+$W_{Net,C}$) divided by the heat input added to the heater in the gas turbine cycle, Q_1.

$$0=(Wnet,_A+W_{net,B}+W_{Net,C})/Q_1 \tag{11.3.1}$$

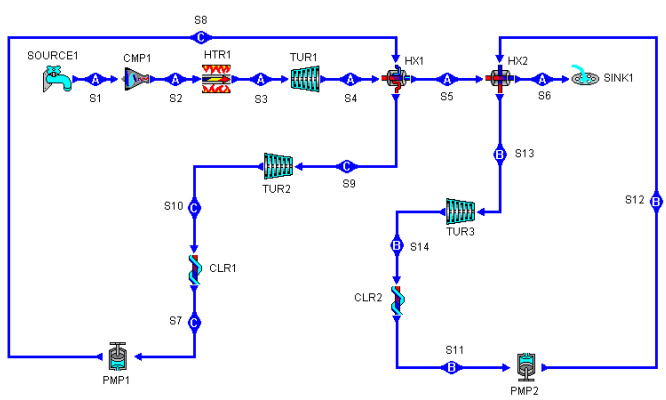

Figure 11.3.1. Triple cycle in parallel.

The triple cycle efficiency therefore may be substantially greater than the cycle efficiency of any of its components operating alone.

A numerical example is given in the following to illustrate the cycle analysis of the triple cycle in parallel.

Example 11.3.1.

An open Brayton plant releases a part of its waste heat to a recovery steam generator, which supplies heat to a Rankine steam plant, and another part of its waste heat to a recovery R-12 generator, which supplies heat to a Rankine R-12 plant. The data given below correspond approximately to the design conditions for a triple plant in parallel.

p_1=101.3 kPa, T_1=15EC, p_2=8 p_1, T_3=1200EC, p_4=101.3 kPa, T_5=450EC, T_6=40EC, x_7=0, p_7=20 kPa, p_9=2000 kPa, T_9=400EC, x_{11}=0, p_{11}=500 kPa, p_{13}=900 kPa, x_{13}=1, $mdot_1$=1 kg/s, and $0_{compressor}$=$0_{turbine}$=0_{pump}=100%.

Determine the power required by the compressor, power required by pump #1 and #2, power produced by turbine #1, power produced by turbine #2, produced by turbine #3, rate of heat added to the Brayton cycle, net power produced by the Brayton gas-turbine plant, net power produced by the steam Rankine plant, rate of heat exchanged in the heat exchanger #1, rate of heat added to the R-12 Rankine plant, mass rate flow of air in the Brayton cycle, mass rate flow of steam in the Rankine steam plant, mass rate flow of R-12 in the Rankine R-12 plant, cycle efficiency of the Brayton plant, cycle efficiency of the steam Rankine plant, cycle efficiency of the R-12 Rankine plant, and cycle efficiency of the triple plant.

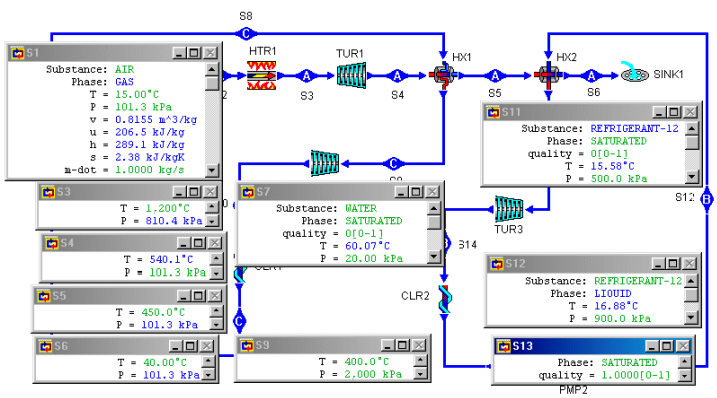

Figure E11.3.1a. Input information.

To solve this problem with CyclePad, we take the following steps:

1. Build as shown in Figure 11.3.1.
2. Analysis
   (A) Assume a process each for the devices: (a) pumps as adiabatic with 100% efficiency, (b) turbines as adiabatic with 100% efficiency, (c) heat exchanger as isobaric on both cold-side and hot-side, and (d) heater, and coolers as isobaric.
   (B) Input the given information as shown in Figure E11.3.1a: (a) working fluid of cycle A is air, working fluid of cycle B is R-12, and working fluid of cycle C is water, (b) p_1=101.3 kPa, T_1=15EC, p_2=8 p_1, T_3=1200EC, p_4=101.3 kPa, T_5=450EC, T_6=40EC, x_7=0, p_7=20 kPa, p_9=2000 kPa, T_9=400EC, x_{11}=0, p_{11}=500 kPa, p_{13}=900 kPa, x_{13}=1, $mdot_1$=1 kg/s, and $mdot_1$=1 kg/s.

3. Display result The answers shown in Figure E11.3.1b are: $Wdot_{compressor\ \#1}$=-234.6 kW, $Wdot_{pump\ \#1}$=-0.0609 kW,$Wdot_{pump\ \#2}$=-5.96 kW, $Wdot_{turbine\#1}$=662.2 kW, $Wdot_{turbine\#2}$=27.13 kW, $Wdot_{turbine\#3}$=28.07 kW, $Qdot_{HTR\ \#1}$=954.4 kW, $Wdot_{net\ Brayton}$=427.5 kW, $Wdot_{net\ steam\ Rankine}$=27.07 kW, $Wdot_{net\ R12\ Rankine}$=22.12 kW, $Wdot_{net\ triple}$=476.7 kW, $Qdot_{cooler\#1}$=-63.33 kW, $mdot_{steam}$=0.0302 kg/s, $mdot_{R12}$=2.75 kg/s, $0_{Brayton}$=44.8 %, $0_{steam\ Rankine}$=29.94 %, $0_{R12\ Rankine}$=5.38 %, and 0_{triple}=49.95 %.

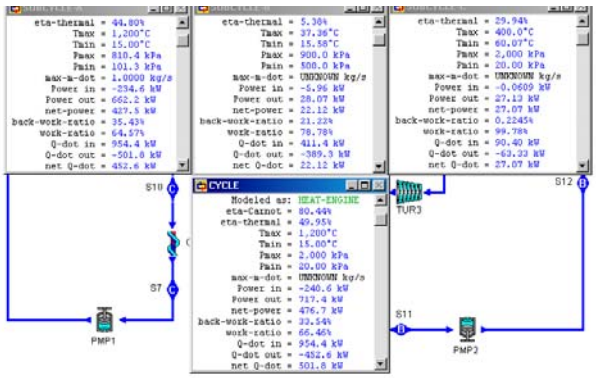

Figure E11.3.1b. Output information.

Homework 11.3. Triple Cycle in Parallel

1. Redo Example 11.3.1 with $0_{compressor}$=$0_{turbine}$=90% and 0_{pump}=100%. Find the power input, power output, net power output, rate of heat added, and cycle efficiency of the triple cycle.
   ANSWER: -266.7 kW, 663.5 kW, 396.8 kW, 928.4 kW, 42.74%.
2. An open Brayton plant releases a part of its waste heat to a recovery steam generator, which supplies heat to a Rankine steam plant, and another part of its waste heat to a recovery R-12 generator, which supplies heat to a Rankine R-12 plant. The data given below correspond approximately to the design conditions for a triple plant in parallel.
   p_1=101.3 kPa, T_1=15EC, p_2=10 p_1, T_3=1200EC, p_4=101.3 kPa, T_5=450EC, T_6=40EC, x_7=0, p_7=20 kPa, p_9=2000 kPa, T_9=400EC, x_{11}=0, p_{11}=500 kPa, p_{13}=900 kPa, x_{13}=1, $mdot_1$=1 kg/s, $0_{compressor}$=$0_{turbine}$=90%, and 0_{pump}=100%.
   Determine the power input, power output, net power output, rate of heat added, and cycle efficiency of the triple cycle.
   ANSWER: -305.6 kW, 696.6 kW, 391.6 kW, 890.0 kW, 44.00%.
3. An open Brayton plant releases a part of its waste heat to a recovery steam generator, which supplies heat to a Rankine steam plant, and another part of its waste heat to a recovery ammonia generator, which supplies heat to a Rankine ammonia plant. The data given below correspond approximately to the design conditions for a triple plant in parallel.

p_1=101.3 kPa, T_1=15EC, p_2=10 p_1, T_3=1200EC, p_4=101.3 kPa, T_5=450EC, T_6=40EC, x_7=0, p_7=20 kPa, p_9=2000 kPa, T_9=400EC, x_{11}=0, p_{11}=500 kPa, p_{13}=900 kPa, x_{13}=1, $mdot_1$=1 kg/s, $0_{compressor}$=$0_{turbine}$=90%, and 0_{pump}=100%.

Determine the power input, power output, net power output, rate of heat added, and cycle efficiency of the triple cycle.

ANSWER: -301.8 kW, 692.8 kW, 391.0 kW, 890.0 kW, 43.93%.

4. An open Brayton plant releases a part of its waste heat to a recovery steam generator, which supplies heat to a Rankine steam plant, and another part of its waste heat to a recovery ammonia generator, which supplies heat to a Rankine ammonia plant. The data given below correspond approximately to the design conditions for a triple plant in parallel.

   p_1=14.7 psia, T_1=60EF, p_2=10 p_1, T_3=2000EF, p_4=14.7 kPa, T_5=850EF, T_6=110EF, x_7=0, p_7=3 psia, p_9=300 psia, T_9=750EF, x_{11}=0, p_{11}=70 psia, p_{13}=130 psia, x_{13}=1, $mdot_1$=1.2 lbm/s, $0_{compressor}$=$0_{turbine}$=90%, and 0_{pump}=100%.

   Determine the power input, power output, net power output, rate of heat added, and cycle efficiency of the triple cycle.

   ANSWER: -220.8 hp, 459.8 hp, 239.0 hp, 403.4 Btu/s, 41.88%.

5. An open Brayton plant releases a part of its waste heat to a recovery steam generator, which supplies heat to a Rankine steam plant, and another part of its waste heat to a recovery R-12 generator, which supplies heat to a Rankine R-12 plant. The data given below correspond approximately to the design conditions for a triple plant in parallel.

   p_1=14.7 psia, T_1=60EF, p_2=10 p_1, T_3=2000EF, p_4=14.7 kPa, T_5=850EF, T_6=110EF, x_7=0, p_7=3 psia, p_9=300 psia, T_9=750EF, x_{11}=0, p_{11}=70 psia, p_{13}=130 psia, x_{13}=1, $mdot_1$=1.2 lbm/s, $0_{compressor}$=$0_{turbine}$=90%, and 0_{pump}=100%.

   Determine the power input, power output, net power output, rate of heat added, and cycle efficiency of the triple cycle.

   ANSWER: -223.1 hp, 462.7 hp, 239.6 hp, 403.4 Btu/s, 41.97%.

6. An open Brayton plant releases a part of its waste heat to a recovery steam generator, which supplies heat to a Rankine steam plant, and another part of its waste heat to a recovery R-12 generator, which supplies heat to a Rankine R-12 plant. The data given below correspond approximately to the design conditions for a triple plant in parallel.

   p_1=14.7 psia, T_1=60EF, p_2=9 p_1, T_3=2000EF, p_4=14.7 kPa, T_5=850EF, T_6=110EF, x_7=0, p_7=3 psia, p_9=300 psia, T_9=750EF, x_{11}=0, p_{11}=70 psia, p_{13}=130 psia, x_{13}=1, $mdot_1$=1.2 lbm/s, $0_{compressor}$=$0_{turbine}$=90%, and 0_{pump}=100%.

   Determine the power input, power output, net power output, rate of heat added, and cycle efficiency of the triple cycle.

   ANSWER: -209.7 hp, 452.3 hp, 242.6 hp, 412.9 Btu/s, 41.53%.

11.4. CASCADED CYCLE

There are applications when the temperature difference between the heat source and the heat sink is quite large. A single power cycle usually can not be used to utilize the full range

of the available temperature difference. A *cascade cycle* must be used to gain maximum possible efficiency from the primary heat source. A cascade cycle is several (n) power cycles connecting in series or in parallel. A cascade cycle of three cycles in series is shown in Figure 11.4.1. The energy flow diagram of n cycles in series cascade cycle is illustrated in Figure 11.4.2. The cooler of the highest-temperature cycle (cycle A) provides the heat input to the heater of the second-highest-temperature cycle (cycle B); ....; and the cooler of the next-to-the-lowest-temperature cycle provides the heat input to the heater of the lowest-temperature cycle (cycle N).

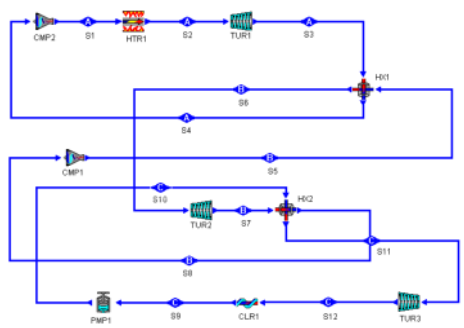

Figure 11.4.1. Cascade cycle with n=3.

The overall efficiency of the cascaded cycle is the total output work ($W_1+W_2+...+W_N$) divided by the heat input, Q_1. Referring to Figure 11.4.2, we have

$$0= (W_1+W_2+...+W_N)/Q_1 \tag{11.4.1}$$

$$W_1=0_AQ_1 \tag{11.4.2}$$

$$W_2=0_BQ_2 \tag{11.4.3}$$

.....

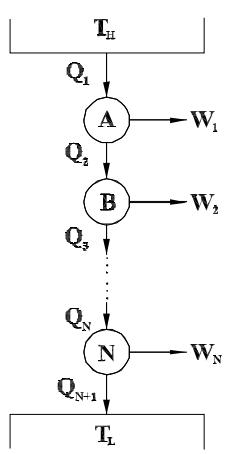

Figure 11.4.2. Cascade cycle energy flow diagram.

and

$$W_N=0_N Q_n \tag{11.4.4}$$

Substituting W_1,W_2, ..., and W_N into Equation (11.4.1), the following efficiency expression is obtained.

$$0_{cascaded}=1-(1-0_1)(1-0_2)...(1-0_N) \tag{11.4.5}$$

where $0_{cascaded}$ is the efficiency of a cascaded cycle with n-component cycles.

The cascaded cycle efficiency therefore may be substantially greater than the cycle efficiency of any of its components operating alone.

Homework 11.4. Cascaded Cycle

1. Build a cascaded cycle in series with n=5 using CyclePad.
2. Build a cascaded cycle in parallel with n=5 using CyclePad. The topping cycle is an open gas turbine cycle.

11.5. BRAYTON/RANKINE COMBINED CYCLE

Advances in combined cycle power plant focus on high temperature gas turbine cycle combined with steam vapor cycle. Improvement on cycle efficiency can be achieved by using the hot exhaust waste heat of a high-temperature cycle to either partially or totally power a low-temperature cycle. For example, since the boiler temperature of the basic Rankine cycle is about 500EC, the exhaust gases of the gas turbine cycle with a temperature of 500EC could be used for the boiler heat the boiler heat input. One arrangement of the *Brayton/Rankine cycle* which is a combination of a two-stage reheat Brayton cycle and a two-stage reheat Rankine cycle is shown in Figure 11.5.1. In general, modifications of both the Brayton and Rankine cycles could also be included. Since the net work output is equal to the sum of the two outputs and the heat input is that of the topping cycle alone, a substantial cycle efficiency increase is possible. Another arrangement of the Brayton/Rankine cycle which is a combination of a two-stage reheat Brayton cycle and a two-stage reheat Rankine cycle is shown in Figure 11.5.2.

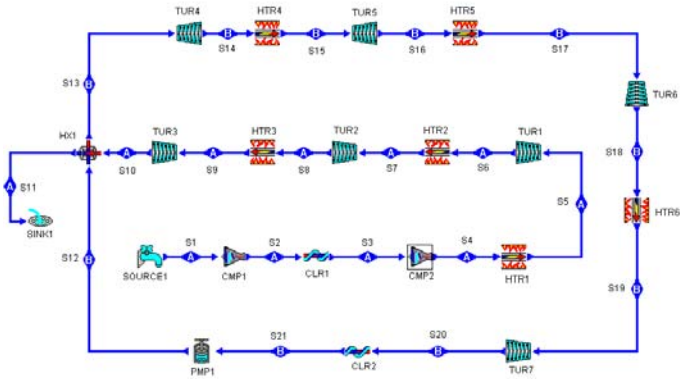

Figure 11.5.1. Brayton/Rankine combined cycle.

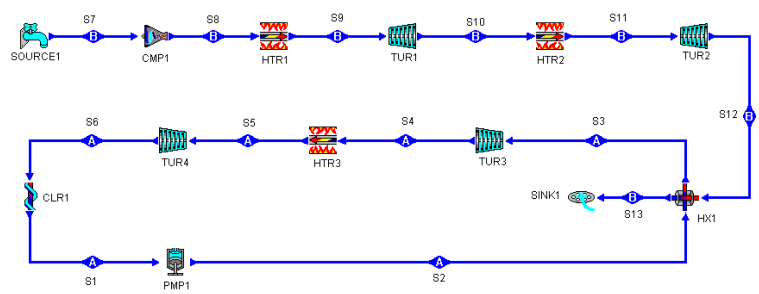

Figure 11.5.2. (Two-stage-Brayton)/(Two-stage-Rankine) combined cycle.

Example 11.5.1.

A Brayton/Rankine cycle (Fig.11.5.1) uses water as the working fluid with 1 kg/s mass flow rate through the Rankine cycle, and air as the working fluid in the Brayton cycle. In the Rankine cycle, the condenser pressure is 15 kPa (p_1); the boiler pressure is 8000 kPa (p_2); the re-heater pressure is 5000 kPa (p_4); the super-heater and re-heater temperature (T_3 and T_5) are both 400EC. In the Brayton cycle, air enters from the atmospheric source to an isentropic compressor at 20EC and 100 kPa (T_7 and p_7), and leaves at 1000 kPa (p_8); air enters an isobaric heater (combustion chamber) and leaves at 1800EC (T_9); air enters a high pressure isentropic turbine and leaves at 600 kPa (p_{11}). Air enters a low pressure isentropic turbine and leaves at 100 kPa (p_{12}); air enters an isobaric regenerator and leaves at 500EC (T_{13}); and air is discharged to the atmospheric sink.

Determine the mass rate flow of air through the Brayton cycle, thermodynamic efficiency and the net power output of the Brayton/Rankine combined plant. Plot the sensitivity diagram of 0 (cycle efficiency) vs p_{11} (pressure at state 11).

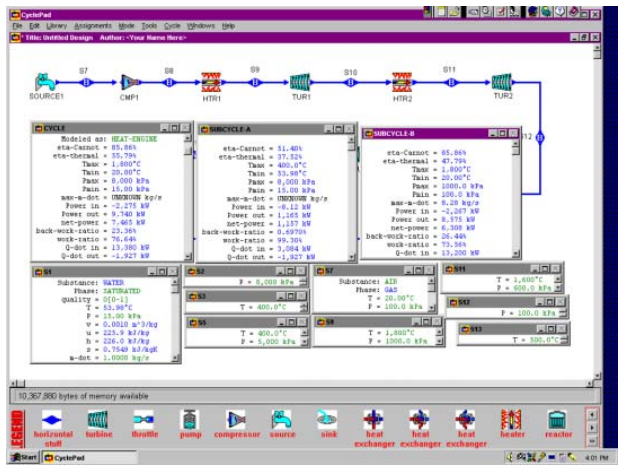

Figure E11.5.1a. Brayton/Rankine combined cycle.

To solve this problem by CyclePad, we do the following steps:

(A) Build the cycle as shown in Figure 11.5.1. Assuming the compressor, turbines and pump are adiabatic and isentropic, and the heater, cooler and regenerator are isobaric.

(B) Input working fluid=air, p_1=15 kPa, x_1=0, mdot=1 kg/s, p_3=8000 kPa, T_3=400EC, p_5=5000 kPa, T_5=400EC, p_7=100 kPa, T_7=20EC, p_9=1000 kPa, T_9=1800EC, p_{11}=600 kPa, T_{11}=1600EC, p_{12}=100 kPa, and T_{13}=500EC.

(C) Display results. The answers shown in Figure E11.5.1a are: (1) Cycle A: 0=37.52%, power input=-8.12 kW, power output=1165 kW, net power output=1157 kW, Qdot in=3084 kW; (2) Cycle B: 0=47.79%, power input=-2267 kW, power output=8575 kW, net power output=6308 kW, Qdot in=13200 kW, mdot=8.28 kg/s; and (3) combined Cycle: 0=55.79%, power input=-2275 kW, power output=9740 kW, net power output=7465 kW, Qdot in=13380 kW.

(D) Display sensitivity diagram of 0 (cycle efficiency) vs p_{11}(pressure at state 11) as shown in Figure E11.5.1b.

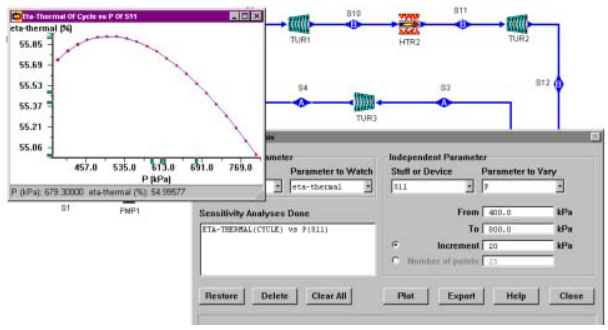

Figure E11.5.1b. Brayton/Rankine combined cycle.

Homework 11.5. Brayton/Rankine Combined Cycle

1. What is a combined Brayton/Rankine cycle? What is its purpose?
2. What is the heat source for the Rankine cycle in the combined Brayton/Rankine cycle?
3. Why is the combined Brayton/Rankine cycle more efficient than either of the cycles operating alone?
4. A Brayton/Rankine cycle (Fig. 11.5.1) uses water as the working fluid with 1 kg/s mass flow rate through the Rankine cycle, and air as the working fluid in the Brayton cycle. In the Rankine cycle, the condenser pressure is 15 kPa (p_1); the boiler pressure is 8000 kPa (p_2); the reheater pressure is 5000 kPa (p_4); the super-heater and re-heater temperature (T_3 and T_5) are both 400EC. In the Brayton cycle, air enters from the atmospheric source to an isentropic compressor at 20EC and 100 kPa (T_7 and p_7), and leaves at 1000 kPa (p_8); air enters an isobaric heater (combustion chamber) and leaves at 1800EC (T_9); air enters a high pressure isentropic turbine and leaves at 600 kPa (p_{11}). Air enters a low pressure isentropic turbine and leaves at 100 kPa (p_{12}); air enters an isobaric regenerator and leaves at 500EC (T_{13}); and air is discharged to the atmospheric sink. Assume the compressor efficiency is 85%.

   Determine the mass flow rate of air through the Brayton cycle, the thermodynamic efficiency and the net power output of the Brayton/Rankine combined plant.

   ANSWER: (1) Cycle A: 0=37.52%, power input=-8.12 kW, power output=1165 kW, net power output=1157 kW, Qdot in=3084 kW; (2) Cycle B: 0=46.16%, power input=-2667 kW, power output=8575 kW, net power output=5908 kW, Qdot in=12800 kW, mdot=8.28 kg/s; and (3) combined Cycle: 0=54.43%, power input=-2675 kW, power output=9740 kW, net power output=7065 kW, Qdot in=12980 kW.
5. A Brayton/Rankine cycle (Fig. 11.5.1) uses water as the working fluid with 1 kg/s of mass flow rate through the Rankine cycle, and air as the working fluid in the Brayton cycle. In the Rankine cycle, the condenser pressure is 15 kPa (p_1); the boiler pressure is 8000 kPa (p_2); the reheater pressure is 5000 kPa (p_4); the super-heater and re-heater temperature (T_3 and T_5) are both 400EC. In the Brayton cycle, air enters from the atmospheric source to an isentropic compressor at 20EC and 100 kPa (T_7 and p_7),

and leaves at 1000 kPa (p_8); air enters an isobaric heater (combustion chamber) and leaves at 1800EC (T_9); air enters a high pressure isentropic turbine and leaves at 600 kPa (p_{11}). Air enters a low pressure isentropic turbine and leaves at 100 kPa (p_{12}); air enters an isobaric regenerator and leaves at 500EC (T_{13}); and air is discharged to the atmospheric sink. Assume the gas turbines and compressor efficiency are 85%.

Determine the mass rate flow of air through the Brayton cycle, thermodynamic efficiency and the net power output of the Brayton/Rankine combined plant.

ANSWER: (1) Cycle A: 0=37.52%, power input=-8.12 kW, power output=1165 kW, net power output=1157 kW, Qdot in=3084 kW; (2) Cycle B: 0=37.12%, power input=-2017 kW, power output=5513 kW, net power output=3496 kW, Qdot in=9416 kW, mdot=6.26 kg/s; and (3) combined Cycle: 0=48.48%, power input=-2025 kW, power output=6678 kW, net power output=4653 kW, Qdot in=9596 kW.

6. A Brayton/Rankine cycle (Fig. 11.5.1) uses water as the working fluid with 1 kg/s mass rate of flow through the Rankine cycle, and air as the working fluid in the Brayton cycle. In the Rankine cycle, the condenser pressure is 15 kPa (p_1); the boiler pressure is 8000 kPa (p_2); the re-heater pressure is 5000 kPa (p_4); the super-heater and re-heater temperature (T_3 and T_5) are both 400EC. In the Brayton cycle, air enters from the atmospheric source to an isentropic compressor at 20EC and 100 kPa (T_7 and p_7), and leaves at 1000 kPa (p_8); air enters an isobaric heater (combustion chamber) and leaves at 1800EC (T_9); air enters a high pressure isentropic turbine and leaves at 600 kPa (p_{11}). Air enters a low pressure isentropic turbine and leaves at 100 kPa (p_{12}); air enters an isobaric regenerator and leaves at 500EC (T_{13}); and air is discharged to the atmospheric sink. Assume all turbine and compressor efficiencies are 85%.

   Determine the mass flow rate of air through the Brayton cycle, thermodynamic efficiency and the net power output of the Brayton/Rankine combined plant.

   ANSWER: (1) Cycle A: 0=32.04%, power input=-8.12 kW, power output=990.3 kW, net power output=982.2 kW, Qdot in=3066 kW; (2) Cycle B: 0=37.12%, power input=-2017 kW, power output=5513 kW, net power output=3496 kW, Qdot in=9416 kW, mdot=6.26 kg/s; and (3) combined Cycle: 0=46.75%, power input=-2025 kW, power output=6503 kW, net power output=4478 kW, Qdot in=9578 kW.

11.6. BRAYTON/BRAYTON COMBINED CYCLE

The Brayton gas turbine engine has low capital cost compared with steam power plants. It has environmental advantages and short construction lead time. However, conventional industrial Brayton gas turbine engines have lower efficiencies. One of the technologies adopted nowadays for efficiency improvement is the utilization of Brayton/Brayton combined cycles (Reference: Y.S.H. Najjar and M.S. Zaamout, Performance analysis of gas turbine air-bottoming combined system, *Energy Conversion and Management*, **37**(4), 399-403, 1996). Air-bottoming cycle instead of steam-bottoming reduces the cost of hardware installations and could achieve a thermal efficiency of about 49%, which does not deteriorate at part load as happens with the basic Brayton gas turbine engine. A Brayton/Brayton combined cycle is shown in Figure 11.6.1. In this system, an air turbine is used to convert the split-shaft turbine

exhaust heat from the top cycle. Three inter-cooled compressor stages are used to reduce the compressor work and the temperature of the air delivered to an air-to-gas heat exchanger. Air, heated by the exhaust gas, is then delivered to the air turbine which, in turn, produces power. The combined system is expected to be simpler and much less expensive to build, operate and maintain than the Brayton/Rankine combined system.

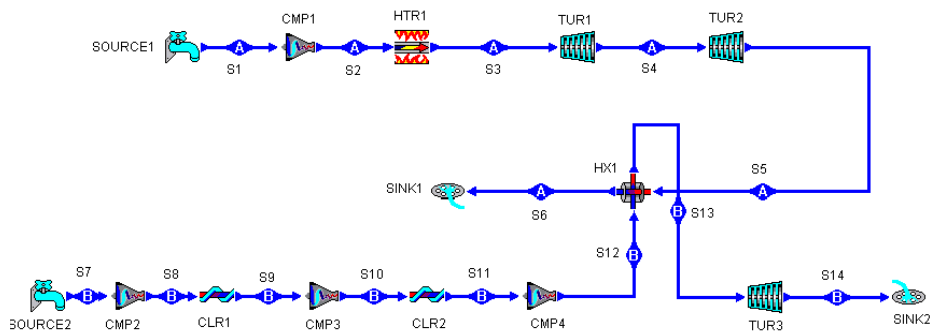

Figure 11.6.1. Brayton/Brayton combined cycle.

Example 11.6.1.

A Brayton/Brayton cycle (Fig. 11.6.1) uses air as the working fluid with 1 kg/s mass flow rate through the top Brayton split-shaft turbine cycle, and air as the working fluid in the bottom Brayton cycle.

In the top-Brayton cycle, air at a mass flow rate of 1 kg/s enters from the atmospheric source to an isentropic compressor at 290 K and 100 kPa (T_1 and p_1), and leaves at 1000 kPa (p_2); air enters an isobaric heater (combustion chamber) and leaves at 1400 K (T_3); air goes through a high pressure isentropic turbine (tur1) and a low pressure isentropic turbine (tur2); air enters an isobaric heat exchanger and leaves at 700 K (T_6) and 100 kPa (p_6); and air is discharged to the atmospheric sink. In the bottom-Brayton cycle, air at a mass flow rate of 0.12 kg/s enters from the atmospheric source to an isentropic compressor (Cmp2) at 290 K and 100 kPa (T_7 and p_7), and leaves at 200 kPa (p_2); air enters an isobaric inter-cooler (Clr1) and leaves at 290 K (T_9); air leaves an isentropic compressor (Cmp3) at 400 kPa (p_{10}); air enters an isobaric inter-cooler (Clr2) and leaves at 290 K (T_{11}); air leaves another isentropic compressor (Cmp4) at 800 kPa (p_{12}); and air at 473 K and 100 kPa (T_{14} and p_{14}) is discharged to the atmospheric sink.

Determine the pressure and temperature of each state, power required by the topping-cycle compressor, power produced by the topping-cycle turbines, thermal efficiency of the combined cycle, thermal efficiency of the topping cycle, thermal efficiency of the bottom cycle, power input to the combined cycle, power output by the combined cycle, power net output of the combined cycle, rate of heat added to the combined cycle, rate of heat removed from the combined cycle, power input to the topping cycle, power output by the topping cycle, power net output of the topping cycle, rate of heat added to the topping cycle, rate of

heat removed from the topping cycle, power input to the bottom cycle, power output by the bottom cycle, power net output of the bottom cycle, rate of heat added to the bottom cycle, and rate of heat removed from bottom the cycle.

To solve this problem by CyclePad, we do the following steps:

(A) Build the cycle as shown in Figure 11.6.1. Assuming the compressors and turbines are adiabatic and isentropic, and the heater, coolers and heat exchanger are isobaric.

(B) Input working fluid=air, p_1=100 kPa, T_1=290 K, mdot=1 kg/s, p_2=1000 kPa, T_3=1400 K, p_6=100 kPa, T_6=700 K, p_7=100 kPa, T_7=290 K, p_9=200 kPa, T_9=290 K, p_{11}=400 kPa, T_{11}=290 K, p_{12}=800 kPa, p_{14}=100 kPa, and T_{14}=473 K. Read $Wdot_{cmp1}$=-270.8 kW and input $Wdot_{tur1}$=270.8 kW.

(C) Display results. The answers are: (1) p_1=100 kPa, T_1=290 K, p_2=1000 kPa, T_2=559.9 K, p_3=1000 kPa, T_3=1400 K, p_4=472.6 kPa, T_4=1130 K, p_5=100 kPa, T_5=725.1 K, p_6=100 kPa, T_6=700 K, p_7=100 kPa, T_7=290 K, p_8=200 kPa, T_8=353.5 K, p_9=100 kPa, T_9=290 K, p_{10}=400 kPa, T_{10}=353.5 K, p_{11}=400 kPa, T_{11}=290 K, p_{12}=800 kPa, T_{12}=353.5 K, p_{13}=800 kPa, T_{13}=562.9 K, p_{14}=100 kPa, T_{14}=310.7 K, and $Wdot_{cmp1}$=-270.8 kW as shown in Figure E11.6.1a. (2) 0_{comb}=49.09%, 0_{top}=48.21%, 0_{bot}=29.43%, (power input)$_{comb}$=-293.8 kW, (power input)$_{top}$=-270.2 kW, (power input)$_{bot}$=-22.94 kW, (power output)$_{comb}$=707.5 kW, (power output)$_{top}$=677.2 kW, (power output)$_{bot}$=30.36 kW, (net power output)$_{comb}$=413.8 kW, (net power output)$_{top}$=406.4 kW, (net power output)$_{bot}$=7.42 kW, (Qdot in)$_{comb}$=843.0 kW, (Qdot in)$_{top}$=843.0 kW, (Qdot in)$_{bot}$=25.21 kW; (Qdot out)$_{comb}$=-15.3 kW, (Qdot out)$_{top}$=-25.21 kW, and (Qdot out)$_{bot}$=-15.3 kW as shown in Figure E11.6.1a and b.

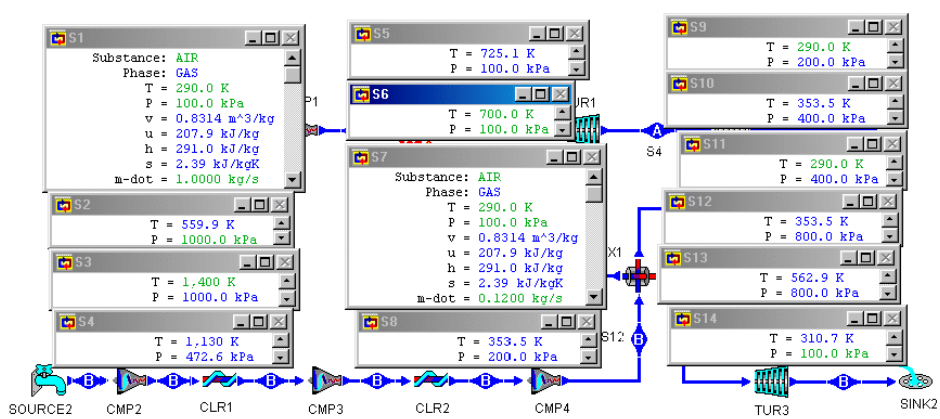

Figure E11.6.1a. Brayton/Brayton combined cycle result.

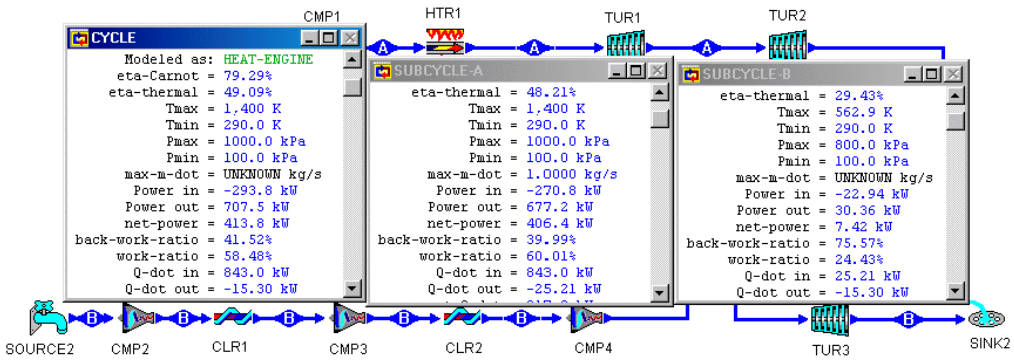

Figure E11.6.1b. Brayton/Brayton combined cycle result.

Homework 11.6. Brayton/Brayton Combined Cycle

1. What are the advantages of a combined Brayton/Brayton cycle?
2. A Brayton/Brayton cycle (Fig. 11.6.1) uses air as the working fluid with 1 kg/s mass flow rate through the top Brayton split-shaft turbine cycle, and air as the working fluid in the bottom Brayton cycle.

   In the top-Brayton cycle, air at a mass flow rate of 1 kg/s enters from the atmospheric source to an adiabatic compressor at 290 K and 100 kPa (T_1 and p_1), and leaves at 1000 kPa (p_2); air enters an isobaric heater (combustion chamber) and leaves at 1400 K (T_3); air goes through a high pressure isentropic turbine (tur1) and a low pressure isentropic turbine (tur2); air enters an isobaric heat exchanger and leaves at 700 K (T_6) and 100 kPa (p_6); and air is discharged to the atmospheric sink. In the bottom-Brayton cycle, air at a mass flow rate of 0.12 kg/s enters from the atmospheric source to an adiabatic compressor (Cmp2) at 290 K and 100 kPa (T_7 and p_7), and leaves at 200 kPa (p_2); air enters an isobaric inter-cooler (Clr1) and leaves at 290 K (T_9); air leaves an adiabatic compressor (Cmp3) at 400 kPa (p_{10}); air enters an isobaric inter-cooler (Clr2) and leaves at 290 K (T_{11}); air leaves another adiabatic compressor (Cmp4) at 800 kPa (p_{12}); and air at 473 K and 100 kPa (T_{14} and p_{14}) is discharged to the atmospheric sink. Let $0_{compressor}$=85%.

   Determine the power input, power output, net power output, rate of heat added, and cycle efficiency of the triple cycle.

   ANSWER: -345.6 kW, 708.1 kW, 362.5 kW, 795.2 kW, 45.59%.
3. A Brayton/Brayton cycle (Fig. 11.6.1) uses air as the working fluid with 1 kg/s mass flow rate through the top Brayton split-shaft turbine cycle, and air as the working fluid in the bottom Brayton cycle.

   In the top-Brayton cycle, air at a mass flow rate of 1 kg/s enters from the atmospheric source to an adiabatic compressor at 290 K and 100 kPa (T_1 and p_1), and leaves at 1000 kPa (p_2); air enters an isobaric heater (combustion chamber) and leaves at 1400 K (T_3); air goes through a high pressure isentropic turbine (tur1) and a low pressure isentropic turbine (tur2); air enters an isobaric heat exchanger and leaves at 700 K (T_6) and 100 kPa (p_6); and air is discharged to the atmospheric sink.

In the bottom-Brayton cycle, air at a mass flow rate of 0.1 kg/s enters from the atmospheric source to an adiabatic compressor (Cmp2) at 290 K and 100 kPa (T_7 and p_7), and leaves at 200 kPa (p_2); air enters an isobaric inter-cooler (Clr1) and leaves at 290 K (T_9); air leaves an adiabatic compressor (Cmp3) at 400 kPa (p_{10}); air enters an isobaric inter-cooler (Clr2) and leaves at 290 K (T_{11}); air leaves another adiabatic compressor (Cmp4) at 800 kPa (p_{12}); and air at 473 K and 100 kPa (T_{14} and p_{14}) is discharged to the atmospheric sink. Let $0_{compressor}$=85%.

Determine the power input, power output, net power output, rate of heat added, and cycle efficiency of the triple cycle.

ANSWER: -341.1 kW, 704.9 kW, 363.8 kW, 795.2 kW, 45.75%.

4. A Brayton/Brayton cycle (Fig. 11.6.1) uses air as the working fluid with 1 kg/s mass flow rate through the top Brayton split-shaft turbine cycle, and air as the working fluid in the bottom Brayton cycle.

   In the top-Brayton cycle, air at a mass flow rate of 1 kg/s enters from the atmospheric source to an adiabatic compressor at 290 K and 100 kPa (T_1 and p_1), and leaves at 1200 kPa (p_2); air enters an isobaric heater (combustion chamber) and leaves at 1400 K (T_3); air goes through a high pressure isentropic turbine (tur1) and a low pressure isentropic turbine (tur2); air enters an isobaric heat exchanger and leaves at 700 K (T_6) and 100 kPa (p_6); and air is discharged to the atmospheric sink. In the bottom-Brayton cycle, air at a mass flow rate of 0.1 kg/s enters from the atmospheric source to an adiabatic compressor (Cmp2) at 290 K and 100 kPa (T_7 and p_7), and leaves at 200 kPa (p_2); air enters an isobaric inter-cooler (Clr1) and leaves at 290 K (T_9); air leaves an adiabatic compressor (Cmp3) at 400 kPa (p_{10}); air enters an isobaric inter-cooler (Clr2) and leaves at 290 K (T_{11}); air leaves another adiabatic compressor (Cmp4) at 800 kPa (p_{12}); and air at 473 K and 100 kPa (T_{14} and p_{14}) is discharged to the atmospheric sink. Let $0_{compressor}$=85%.

   Determine the power input, power output, net power output, rate of heat added, and cycle efficiency of the triple cycle.

   ANSWER: -376.5 kW, 725.3 kW, 348.8 kW, 759.8 kW, 45.91%.

5. A Brayton/Brayton cycle (Fig. 11.6.1) uses air as the working fluid with 2.5 lbm/s mass flow rate through the top Brayton split-shaft turbine cycle, and air as the working fluid in the bottom Brayton cycle.

   In the top-Brayton cycle, air at a mass flow rate of 2.5 lbm/s enters from the atmospheric source to an adiabatic compressor at 520 R and 14.7 psia (T_1 and p_1), and leaves at 150 psia (p_2); air enters an isobaric heater (combustion chamber) and leaves at 2500 R (T_3); air goes through a high pressure isentropic turbine (tur1) and a low pressure isentropic turbine (tur2); air enters an isobaric heat exchanger and leaves at 1260 R (T_6) and 14.7 psia (p_6); and air is discharged to the atmospheric sink. In the bottom-Brayton cycle, air at a mass flow rate of 0.2 lbm/s enters from the atmospheric source to an adiabatic compressor (Cmp2) at 520 R and 14.7 psia (T_7 and p_7), and leaves at 30 psia (p_2); air enters an isobaric inter-cooler (Clr1) and leaves at 520 R (T_9); air leaves an adiabatic compressor (Cmp3) at 60 psia (p_{10}); air enters an isobaric inter-cooler (Clr2) and leaves at 520 R (T_{11}); air leaves another adiabatic compressor (Cmp4) at 120 psia (p_{12}). Let $0_{compressor}$=85%.

Determine the power input, power output, net power output, rate of heat added, and cycle efficiency of the triple cycle.

ANSWER: -516.0 hp, 1058 hp, 542.4 hp, 841.1 Btu/s, 45.58%.

6. A Brayton/Brayton cycle (Fig. 11.6.1) uses air as the working fluid with 2.5 lbm/s mass flow rate through the top Brayton split-shaft turbine cycle, and air as the working fluid in the bottom Brayton cycle.

   In the top-Brayton cycle, air at a mass flow rate of 2.5 lbm/s enters from the atmospheric source to an adiabatic compressor at 520 R and 14.7 psia (T_1 and p_1), and leaves at 150 psia (p_2); air enters an isobaric heater (combustion chamber) and leaves at 2500 R (T_3); air goes through a high pressure isentropic turbine (tur1) and a low pressure isentropic turbine (tur2); air enters an isobaric heat exchanger and leaves at 1260 R (T_6) and 14.7 psia (p_6); and air is discharged to the atmospheric sink. In the bottom-Brayton cycle, air at a mass flow rate of 0.2 lbm/s enters from the atmospheric source to an adiabatic compressor (Cmp2) at 520 R and 14.7 psia (T_7 and p_7), and leaves at 30 psia (p_2); air enters an isobaric inter-cooler (Clr1) and leaves at 520 R (T_9); air leaves an adiabatic compressor (Cmp3) at 60 psia (p_{10}); air enters an isobaric inter-cooler (Clr2) and leaves at 520 R (T_{11}); air leaves another adiabatic compressor (Cmp4) at 110 psia (p_{12}). Let $0_{compressor}$=85%.

   Determine the power input, power output, net power output, rate of heat added, and cycle efficiency of the triple cycle.

   ANSWER: -514.8 hp, 1057 hp, 542.4 hp, 841.1 Btu/s, 45.56%.

7. A Brayton/Brayton cycle (Fig. 11.6.1) uses air as the working fluid with 2.5 lbm/s mass flow rate through the top Brayton split-shaft turbine cycle, and air as the working fluid in the bottom Brayton cycle.

   In the top-Brayton cycle, air at a mass flow rate of 2.5 lbm/s enters from the atmospheric source to an adiabatic compressor at 520 R and 14.7 psia (T_1 and p_1), and leaves at 150 psia (p_2); air enters an isobaric heater (combustion chamber) and leaves at 2400 R (T_3); air goes through a high pressure isentropic turbine (tur1) and a low pressure isentropic turbine (tur2); air enters an isobaric heat exchanger and leaves at 1260 R (T_6) and 14.7 psia (p_6); and air is discharged to the atmospheric sink. In the bottom-Brayton cycle, air at a mass flow rate of 0.2 lbm/s enters from the atmospheric source to an adiabatic compressor (Cmp2) at 520 R and 14.7 psia (T_7 and p_7), and leaves at 30 psia (p_2); air enters an isobaric inter-cooler (Clr1) and leaves at 520 R (T_9); air leaves an adiabatic compressor (Cmp3) at 60 psia (p_{10}); air enters an isobaric inter-cooler (Clr2) and leaves at 520 R (T_{11}); air leaves another adiabatic compressor (Cmp4) at 110 psia (p_{12}). Let $0_{compressor}$=85%.

   Determine the power input, power output, net power output, rate of heat added, and cycle efficiency of the triple cycle.

   ANSWER: -514.8 hp, 996.7 hp, 482.0 hp, 781.2 Btu/s, 43.61%.

11.7. RANKINE/RANKINE COMBINED CYCLE

A Rankine/Rankine combined cycle is shown in Figure 11.7.1. The exhaust from the topping steam turbine (Tur1) is hot enough to generate freon vapor in a waste-heat boiler. The freon vapor generated can power a freon turbine, thus increasing the total work produced. The

Rankine/Rankine combined cycle has a thermal efficiency greater than either steam or freon cycle may have by itself. The power plant occupies less area, and the fuel requirements are less.

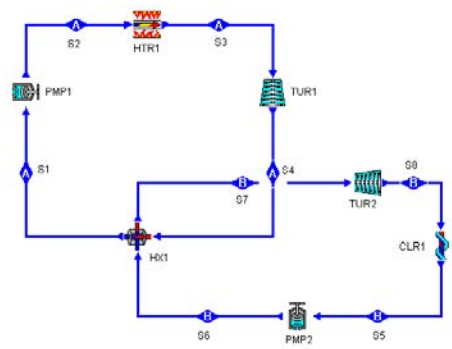

Figure 11.7.1. Rankine/Rankine combined cycle.

Example 11.7.1.

A Rankine/Rankine cycle (Fig. 11.7.1) uses steam as the working fluid with 1 kg/s mass flow rate through the top Rankine cycle, and Freon12 as the working fluid in the bottom Rankine cycle. The steam condenser (HX1) pressure is 20 kPa, the boiler pressure is 3000 kPa, and the steam super-heater temperature is 400EC. The steam mass flow rate is 1 kg/s.

In the bottom cycle, the freon condenser (CLR1) temperature is 20EC, and the freon boiler temperature is 35EC. There is no super-heater in the freon cycle.

Determine (1) the temperature and pressure of each state, and (2) the mass flow rate of the freon cycle, thermal efficiency of the combined cycle, thermal efficiency of the topping cycle, thermal efficiency of the bottom cycle, power input to the combined cycle, power output by the combined cycle, power net output of the combined cycle, rate of heat added to the combined cycle, rate of heat removed from the combined cycle, power input to the topping cycle, power output by the topping cycle, power net output of the topping cycle, rate of heat added to the topping cycle, rate of heat removed from the topping cycle, power input to the bottom cycle, power output by the bottom cycle, power net output of the bottom cycle, rate of heat added to the bottom cycle, and rate of heat removed from bottom the cycle.

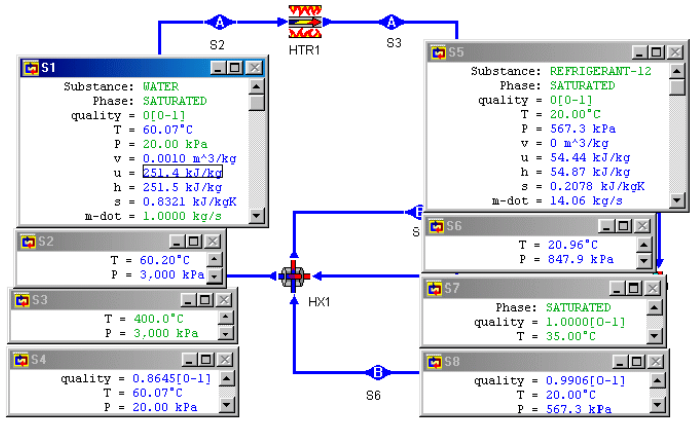

Figure E11.7.1a. Rankine/Rankine combined cycle.

To solve this problem by CyclePad, we do the following steps:

(A) Build the cycle as shown in Figure 11.7.1. Assuming the pumps and turbines are adiabatic and isentropic, and the heater, cooler and heat exchanger are isobaric.

(B) Input topping cycle working fluid=steam, p_1=20 kPa, x_1=0, mdot=1 kg/s, p_3=3000 kPa, T_3=400EC, bottom cycle working fluid=Freon12, x_7=1, T_7=35EC, x_5=0, and T_5=20EC.

(C) Display results. The answers are given in Figure E11.7.1a and Figure E11.7.1b as: (1) p_1=20 kPa, T_1=60.7EC, p_2=3000 kPa, T_2=60.20EC, p_3=3000 kPa, T_3=400EC, p_4=20 kPa, T_4=60.07EC, p_5=567.3 kPa, T_5=20EC, p_6=847.9 kPa, T_6=20.96EC, p_7=847.9 kPa, T_7=35EC, p_8=567.3 kPa, T_8=20EC, and (2) $mdot_{Freon}$=14.06 kg/s, $Wdot_{pump\ topping\ cycle}$=-3.04 kW, $Wdot_{turb\ topping\ cycle}$=941.1 kW, $0_{combined\ cycle}$=34.06%, $0_{topping\ cycle}$=31.52%, $0_{bottom\ cycle}$=3.70%, $Wdot_{in\ combined\ cycle}$=-25.76 kW, $Wdot_{out\ combined\ cycle}$=1039 kW, $Wdot_{net\ combined\ cycle}$=1014 kW, $Qdot_{in\ combined\ cycle}$=2976 kW, $Qdot_{out\ combined\ cycle}$=-1962 kW, $Wdot_{in\ topping\ cycle}$=-3.04 kW, $Wdot_{out\ topping\ cycle}$=941.1 kW, $Wdot_{net\ topping\ cycle}$=938.1 kW, $Qdot_{in\ combined\ cycle}$=2976 kW, $Qdot_{out\ combined\ cycle}$=-2038 kW, $Wdot_{in\ bottom\ cycle}$=-22.71 kW, $Wdot_{out\ bottom\ cycle}$=98.19 kW, $Wdot_{net\ bottom\ cycle}$=75.46 kW, $Qdot_{in\ combined\ cycle}$=2038 kW, and $Qdot_{out\ combined\ cycle}$=-1962 kW.

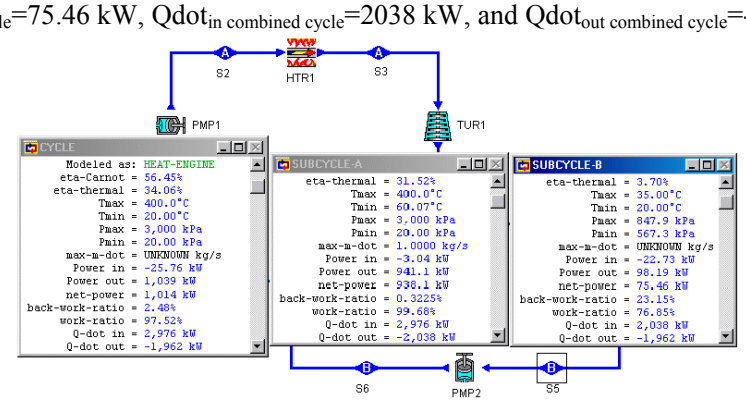

Figure E11.7.1b. Rankine/Rankine combined cycle.

Homework 11.7. Rankine/Rankine Combined Cycle

1. A Rankine/Rankine cycle (Fig. 11.7.1) uses steam as the working fluid with 1 kg/s mass flow rate through the top Rankine cycle, and Freon134a as the working fluid in the bottom Rankine cycle. The steam condenser (HX1) pressure is 20 kPa, the boiler pressure is 2000 kPa, and the steam super-heater temperature is 400EC. The steam mass flow rate is 1 kg/s.

   In the bottom cycle, the freon condenser (CLR1) temperature is 20EC, and the freon boiler temperature is 35EC. There is no super-heater in the freon cycle.

   Determine the mass flow rate of the freon cycle, thermal efficiency of the combined cycle, power input to the combined cycle, power output by the combined cycle, power net output of the combined cycle, rate of heat added to the combined cycle, and rate of heat removed from the combined cycle.

   ANSWER: $mdot_{Freon}$=11.16 kg/s, $0_{combined\ cycle}$=32.52%, $Wdot_{in\ combined\ cycle}$=-24.94 kW, $Wdot_{out\ combined\ cycle}$=998.6 kW, $Wdot_{net\ combined\ cycle}$=973.6 kW, $Qdot_{in\ combined\ cycle}$=2994 kW, $Qdot_{out\ combined\ cycle}$=-2020 kW.
2. A Rankine/Rankine cycle (Fig. 11.7.1) uses steam as the working fluid with 1 kg/s mass flow rate through the top Rankine cycle, and Freon134a as the working fluid in the bottom Rankine cycle. The steam condenser (HX1) pressure is 20 kPa, the boiler pressure is 3000 kPa, and the steam super-heater temperature is 400EC. The steam mass flow rate is 1 kg/s.

   In the bottom cycle, the freon condenser (CLR1) temperature is 20EC, and the freon boiler temperature is 35EC. There is no super-heater in the freon cycle.

   Determine the mass flow rate of the freon cycle, thermal efficiency of the combined cycle, power input to the combined cycle, power output by the combined cycle, power net output of the combined cycle, rate of heat added to the combined cycle, and rate of heat removed from the combined cycle.

   ANSWER: $mdot_{Freon}$=10.84 kg/s, $0_{combined\ cycle}$=34.04%, $Wdot_{in\ combined\ cycle}$=-25.31 kW, $Wdot_{out\ combined\ cycle}$=1038 kW, $Wdot_{net\ combined\ cycle}$=1013 kW, $Qdot_{in\ combined\ cycle}$=2976 kW, $Qdot_{out\ combined\ cycle}$=-1963 kW.

11.8. FIELD CYCLE

The *Field cycle* is a super-generative cycle which makes use of the high-temperature heat addition of the Brayton cycle and the low-temperature heat removal of Rankine cycle. Therefore, it is able to achieve a high mean temperature of heat addition. The gain due to high-temperature heat addition, however, is offset by the reduction in cycle efficiency resulting from the irreversibility of the mixing process. The schematic diagram of the Field cycle is shown in Figure 11.8.1. The arrangement includes one compressor, five turbines, three pumps, one boiler and one re-heater (heaters), one regenerator (heat exchanger), one condenser (cooler), three mixing chambers, and two splitters. Process 1-2, 2-3, 3-4, 4-5, 5-6, and 6-7 takes advantage of the high-temperature heat addition of Brayton cycle, and the rest of the processes takes advantage of the low-temperature heat removing and regenerative condensing of Rankine cycle.

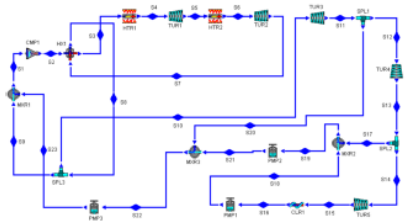

Figure 11.8.1. Field cycle schematic diagram.

Example 11.8.1.

An ideal Field cycle with perfect regeneration as shown in Figure 11.8.1 is designed according to the following data:

p_{16}=10 kPa, x_{16}=0, p_{19}=200 kPa, x_{19}=0, p_{22}=1000 kPa, x_{22}=0, p_{23}=2000 kPa, p_2=6000 kPa, T_4=500 EC, $mdot_4$=1 kg/s, p_5=4000 kPa, T_6=500 EC, T_8=300 EC, $mdot_{10}$=0.9 kg/s, and $mdot_{17}$=0.1 kg/s.

Determine (1) the pressure and temperature of each state of the cycle, (2) power produced by each of the five turbines, rate of heat added by each of the two heaters, power required by the compressor and each of the three pumps, rate of heat removed by the condenser, and (3) net power produced by the cycle, and cycle efficiency.

To solve this problem by CyclePad, we do the following steps:

(A) Build the cycle as shown in Figure 11.8.1. Assuming the compressor, turbines and pump are adiabatic and isentropic; the heaters, mixing chambers, cooler and regenerator are isobaric; and the splitters are iso-parametric.

(B) Input working fluid=water, p_{16}=10 kPa, x_{16}=0, p_{19}=200 kPa, x_{19}=0, p_{22}=1000 kPa, x_{22}=0, p_{23}=2000 kPa, p_2=6000 kPa, T_4=500 EC, $mdot_4$=1 kg/s, p_5=4000 kPa, T_6=500 EC, T_8=300 EC, $mdot_{10}$=0.9 kg/s, and $mdot_{17}$=0.9 kg/s.

(C) Display results. The answers are: (1) p_1=2000 kPa, T_1=212.4 EC, p_2=6000 kPa, T_2=237.3 EC, p_3=6000 kPa, T_3=275.6 EC, p_4=6000 kPa, T_4=500 EC, p_5=4000 kPa, T_5=432.8 EC, p_6=4000 kPa, T_6=500EC, p_7=2000 kPa, T_7=388.9 EC, p_8=2000 kPa, T_8=300EC, p_9=2000 kPa, T_9=300 EC, p_{10}=2000 kPa, T_{10}=300EC, p_{11}=1000 kPa, T_{11}=214.6EC, p_{12}=1000 kPa, T_{12}=214.6EC, p_{13}=200 kPa, T_{13}=120.2EC, p_{14}=200 kPa, T_{14}=120.2EC, p_{15}=10 kPa, T_{15}=45.82EC, p_{16}=10 kPa, T_{16}=45.82EC, p_{17}=200 kPa, T_{17}=120.2EC, p_{18}=200 kPa, T_{18}=45.83EC, p_{19}=200 kPa, T_{19}=120.2EC, p_{20}=1000 kPa, T_{20}=214.6EC, p_{21}=1000 kPa, T_{21}=120.3EC, p_{22}=2000 kPa, T_{17}=179.9EC, and p_{23}=2000 kPa, T_{17}=185.7EC, (2) $Wdot_{T\#1}$=131.9 kW, $Wdot_{T\#2}$=222.4 kW, $Wdot_{T\#3}$=144.7 kW, $Wdot_{T\#4}$=238.9 kW, $Wdot_{T\#5}$=293.2 kW, $Wdot_{P\#1}$=-0.1598 kW, $Wdot_{P\#2}$=-0.6973 kW, $Wdot_{P\#3}$=-28.45 kW, $Wdot_{Compressor}$=-7.57 kW, $Qdot_{Htr\#1}$=2197 kW, $Qdot_{Htr\#2}$=155 kW, and $Qdot_{Condenser}$=-1358 kW, (3) $Wdot_{net}$=994.0 kW, and 0=42.26% as shown in Figure E11.8.1.

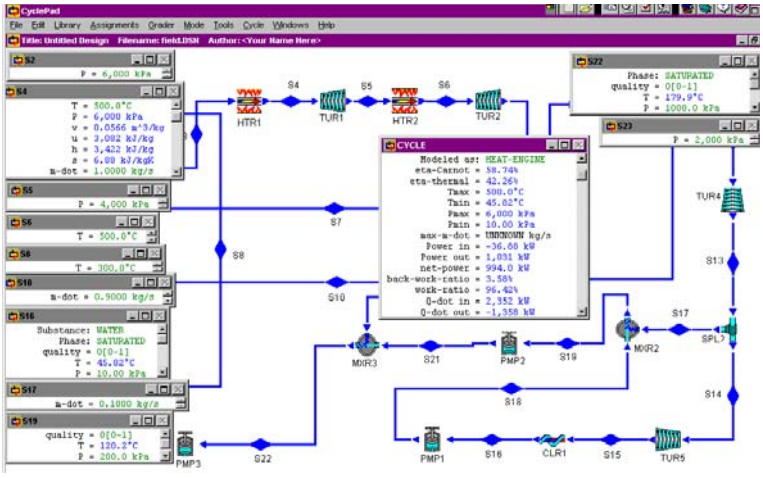

Figure E11.8.1. Field cycle .

Homework 11.8. Field Cycle

1. What is the concept of the Field cycle?
2. An ideal field cycle with perfect regeneration as shown in Figure 11.8.1 is designed according to the following data:

   p_{16}=10 kPa, x_{16}=0, p_{19}=200 kPa, x_{19}=0, p_{22}=1000 kPa, x_{22}=0, p_{23}=2000 kPa, p_2=7000 kPa, T_4=500 EC, $mdot_4$=1 kg/s, p_5=4000 kPa, T_6=500 EC, T_8=300 EC, $mdot_{10}$=0.9 kg/s, and $mdot_{17}$=0.1 kg/s.

   Determine rate of heat added by the heaters, total power produced by the turbines, total power required by the pumps and compressor, net power produced by the cycle, and cycle efficiency.

   ANSWER: $Qdot_{add}$=2393 kW, $Wdot_{Turbines}$=1073 kW, $Wdot_{Pumps\ and\ Compressor}$=-38.1 kW, $Wdot_{net}$=1035 kW, and 0=43.26%.
3. An ideal field cycle with perfect regeneration as shown in Figure 11.8.1 is designed according to the following data:

   p_{16}=10 kPa, x_{16}=0, p_{19}=200 kPa, x_{19}=0, p_{22}=1000 kPa, x_{22}=0, p_{23}=2000 kPa, p_2=7000 kPa, T_4=500 EC, $mdot_4$=1 kg/s, p_5=4000 kPa, T_6=500 EC, T_8=300 EC, $mdot_{10}$=0.9 kg/s, and $mdot_{17}$=0.12 kg/s.

   Determine rate of heat added by the heaters, total power produced by the turbines, total power required by the pumps and compressor, net power produced by the cycle, and cycle efficiency.

   ANSWER: $Qdot_{add}$=2393 kW, $Wdot_{Turbines}$=1074 kW, $Wdot_{Pumps\ and\ Compressor}$=-38.1 kW, $Wdot_{net}$=1036 kW, and 0=43.28%.

11.9. CO-GENERATION

The cycles considered so far in this chapter are power cycles. However, there are applications in which Rankine cycles are used for the combined supply of power and process heat. The heat may be used as process steam for industrial processes, or steam to heat water for central or district heating. This type of combined heat and power plant is called *co-generation*. A schematic co-generation plant is illustrated in Figure 11.9.1. A different schematic co-generation plant is illustrated in Figure 11.9.2.

The one regenerative Rankine basic cycle is composed of the following six processes:

1-2	isentropic compression
3-4	isobaric heat addition
5-6	isentropic expansion
6-1	isobaric heat removing
7-8	constant enthalpy throttling
8-9	isobaric heat removing
9-10	isentropic compression

Applying the mass balance and the First law and Second law of thermodynamics of the open system to the mixing chamber and the splitter of the co-generation Rankine cycle yields:

$$m_3=m_2+m_{10} \tag{11.9.1}$$

$$m_4 = m_7 + m_5 \tag{11.9.2}$$

$$Q_{89} = m_9(h_9 - h_8) \tag{11.9.3}$$

and

$$W_{56} = m_5(h_5 - h_6) \tag{11.9.4}$$

The net work (W_{net}) is

$$W_{net} = W_{56} + W_{9\text{-}10}+ W_{12} \tag{11.9.5}$$

The thermal efficiency of the cycle is

$$0 = W_{net} /Q_{34} \tag{11.9.6}$$

To take account of the desired heat output from process 8-9 (Q_{89}), the co-generation ratio 8 is

$$8 = Q_{89} /Q_{34} \tag{11.9.7}$$

Therefore, the combined power and heat co-generation energy utility factor (EUF) is

EUF=0+8 (11.9.8)

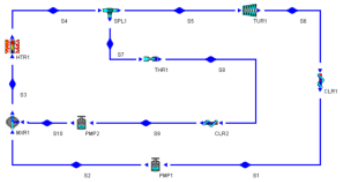

Figure 11.9.1. Co-generation plant.

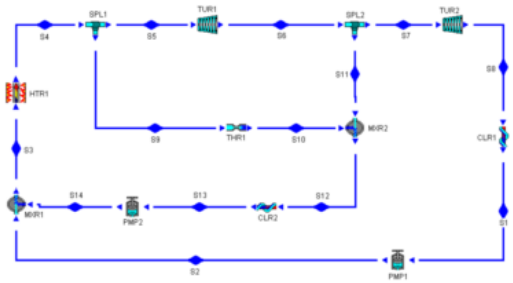

Figure 11.9.2. Co-generation plant.

Example 11.9.1.

A co-generation cycle as shown in Figure 11.9.1 is to be designed according to the following specifications:

boiler temperature=500EC, boiler pressure=7000 kPa, condenser pressure=5 kPa, process steam (cooler #2) pressure=500 kPa, mass rate flow through the boiler=15 kg/s, and mass rate flow through the turbine=14 kg/s.

Determine the rate of heat supply, net power output, process heat output, cycle efficiency, co-generation ratio, and energy utility factor of the cycle.

To solve this problem with CyclePad, we take the following steps:

1. Build as shown in Figure 11.9.1
2. Analysis
   (A) Assume a process each for the following devices: (a) pumps as adiabatic with 100% efficiency, (b) turbines as adiabatic with 100% efficiency, (c) splitter as iso-parametric, (d) mixing chamber as isobaric, (d) condenser and cooler as isobaric, and (e) boiler as isobaric.

(B) Input the given information: (a) working fluid is water, (b) the inlet pressure and quality of pump #1 are 5 kPa and 0, (c) the inlet temperature and pressure of the turbine are 500EC and 7000 kPa, (d) the inlet quality and pressure of pump #2 are 0 and 500 kPa, (e) the steam mass flow rate is 15 kg/s at state 4, and (f) the steam mass flow rate is 14 kg/s at state 5.

3. Display result

The answers are: rate of heat supply=48482 kW, net power output=18607 kW, process heat output=2770 kW, cycle efficiency=0.3838, co-generation ratio=2770/48482=0.0571, and energy utility factor of the cycle=0.3838+0.0571=0.4409.

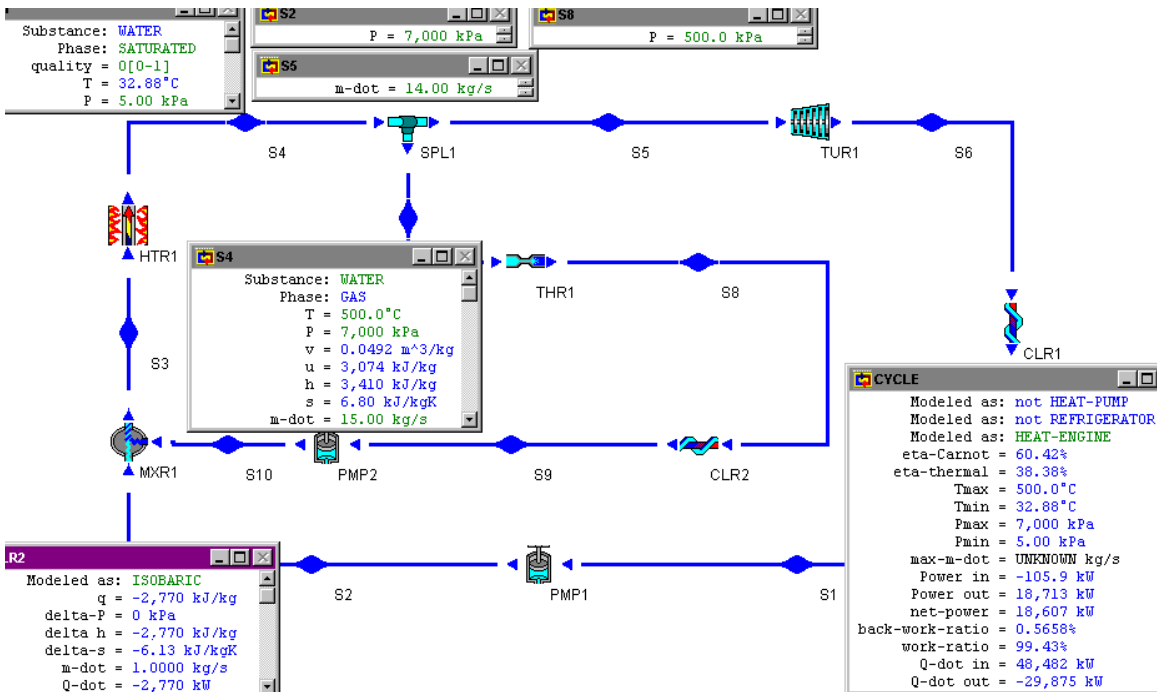

Figure E11.9.1. Co-generation.

Example 11.9.2.

If the co-generation cycle as shown in Figure 11.9.1 is to produce power only according to the following specifications:

boiler temperature=500EC, boiler pressure=7000 kPa, condenser pressure=5 kPa, process steam (cooler #2) pressure=500 kPa, mass rate flow through the boiler=15 kg/s, and mass rate flow through the turbine=15 kg/s. Determine the net power output, rate of heat supply, and cycle efficiency of the cycle.

To solve this problem with CyclePad, we take the following steps:

1. Build as shown in Figure 11.9.1

2. Analysis
   (A) Assume a process each for the following devices: (a) pumps as adiabatic with 100% efficiency, (b) turbines as adiabatic with 100% efficiency, (c) splitter as iso-parametric, (d) mixing chamber as isobaric, (d) condenser and cooler as isobaric, and (e) boiler as isobaric.
   (B) Input the given information: (a) working fluid is water, (b) the inlet pressure and quality of pump #1 are 5 kPa and 0, (c) the inlet temperature and pressure of the turbine are 500EC and 7000 kPa, (d) the inlet quality and pressure of pump #2 are 0 and 500 kPa, (e) the steam mass flow rate is 15 kg/s at state 4, and (f) the steam mass flow rate is 15 kg/s at state 5.
3. Display result

The answers are: rate of heat supply=48985 kW, net power output=19944 kW, and cycle efficiency=0.4071.

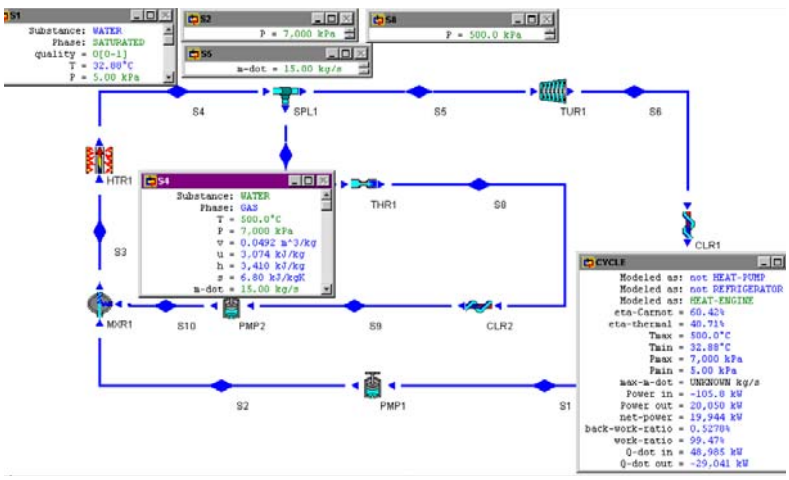

Figure E11.9.2. Co-generation without heat output.

Example 11.9.3.

A co-generation cycle as shown in Figure 11.9.2 is to be designed according to the following specifications:

boiler temperature=400EC, boiler pressure=40 bar, inlet pressure of low-pressure turbine=10 bar, condenser pressure=0.1 bar, process steam (cooler #2) pressure=10 bar, mass rate flow through the boiler=1 kg/s, mass rate flow through the turbine #1=0.98 kg/s, and mass rate flow through the turbine #1=0.95 kg/s.

Determine the rate of heat supply, net power output, process heat output, cycle efficiency, co-generation ratio, and energy utility factor of the cycle.

To solve this problem with CyclePad, we take the following steps:

1. Build as shown in Figure 11.9.2
2. Analysis

(A) Assume a process each for the following devices: (a) pumps as adiabatic with 100% efficiency, (b) turbines as adiabatic with 100% efficiency, (c) splitter as iso-parametric, (d) mixing chamber as isobaric, (d) condenser and cooler as isobaric, and (e) boiler as isobaric.

(B) Input the given information: (a) working fluid is water, (b) p_1=0.1 bar, x_1=0, p_2=40 bar, p_6=10 bar, $mdot_4$=1 kg/s, $mdot_9$=0.02 kg/s, $mdot_{11}$=0.03 kg/s, T_4=400EC, and x_{13}=0.

3. Display result

The answers are: rate of heat supply=2989 kW, net power output=1023 kW, process heat output=112 kW, cycle efficiency=0.3421, co-generation ratio=112/2989=0.03747, and energy utility factor of the cycle=0.3421+0.03747=0.3796.

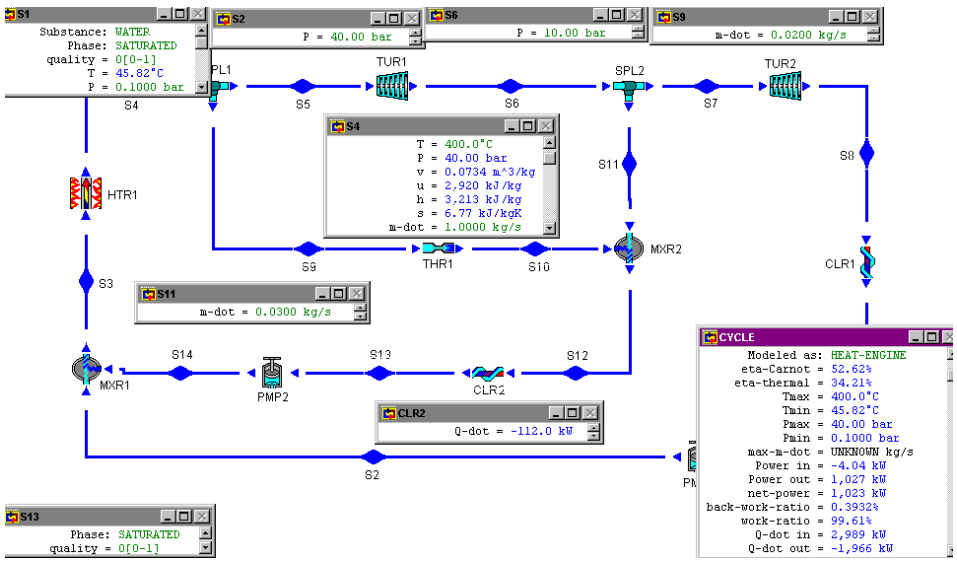

Figure E11.9.3. Co-generation.

There are co-generation applications in which gas cycles are used to supply both gas power and process heat. The heat may be used as process steam for industrial processes, or steam to heat water for central or district heating. A schematic co-generation plant is illustrated in Figure 11.9.3. Figure 11.9.4 depicts a co-generation plant in which an open Brayton gas-turbine plant exhausts to a heat recovery steam generator (heat exchanger), which supplies process steam to a dairy factory. The generator is provided with a gas burner (heater #2) for supplementary heat when the demand of process steam is high. The open Brayton gas-turbine is a split-shaft plant.

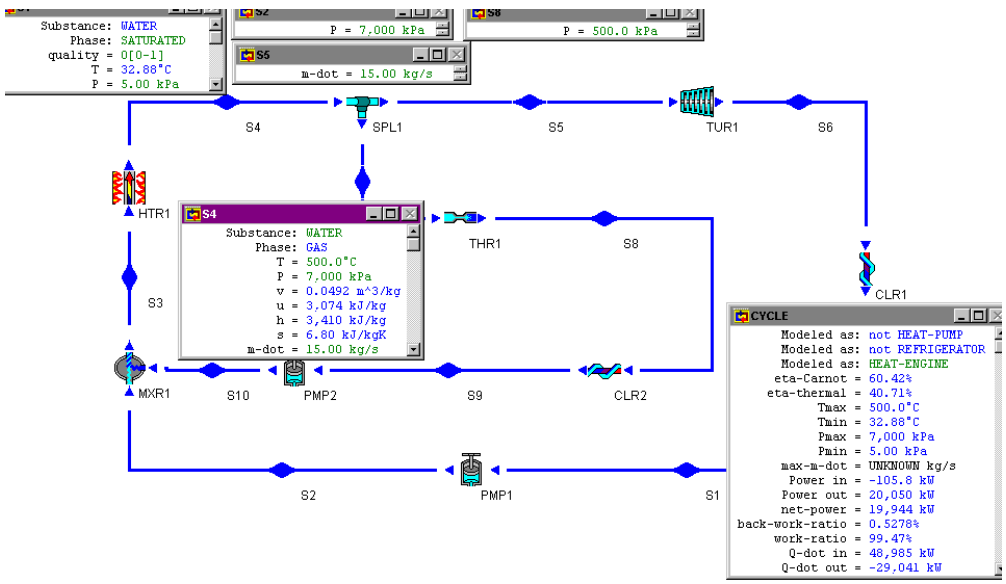

Figure 11.9.3. Co-generation.

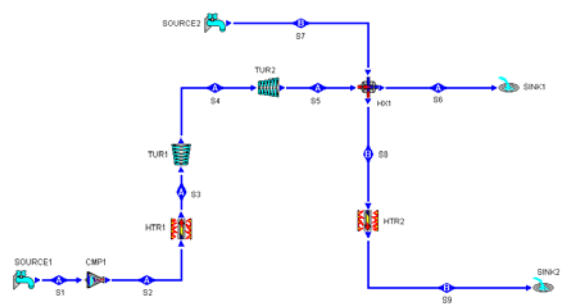

Figure 11.9.4. Co-generation.

The co-generation cycle is composed of the following six processes:

1-2	isentropic compression
2-3	isobaric heat addition
3-4	isentropic expansion
4-5	isentropic expansion
5-6	isobaric heat removing
7-8	isobaric heat addition
8-9	isobaric heat addition

Applying the First law of thermodynamics of the open system to the cogeneration cycle yields:

$$Wdot_{12}=Wdot_{34} \tag{11.9.9}$$

$$mdot_5(h_5 - h_6) = mdot_7 (h_8 - h_7) \quad (11.9.10)$$

The net work (W_{net}) is

$$W_{net} = W_{12} + W_{34} + W_{45} = W_{45} \quad (11.9.11)$$

The combined power and heat co-generation energy utility factor (EUF) is

$$EUF= [W_{net} + mdot_5(h_5 - h_6)] / (Qdot_{23}+Qdot_{89}). \quad (11.9.12)$$

Example 11.9.4.

The data given below correspond approximately to the design conditions for the dairy factory co-generation plant:

$mdot_1$=20.45 kg/s, p_1=1 bar, T_1=25EC, p_2=7 bar, T_3=850EC, p_5=1 bar, T_6=138EC, $0_{compressor}$=$0_{turbine\#1}$=$0_{turbine\#2}$=85%, T_7=90EC, p_7=13 bar, and x_9=1.

Determine the power required by the compressor, power produced by turbine #1, power produced by turbine #2, rate of heat added to the combustion chamber, net power produced by the open Brayton gas-turbine plant, cycle efficiency of the open Brayton gas-turbine plant, rate of heat added to the process steam, rate of process steam, and energy utility of the co-generation plant.

To solve this problem by CyclePad, we do the following steps:

(A) Build the cycle as shown in Figure 11.9.4. Assuming the compressor and turbines are adiabatic and 85% efficient, and the heaters and heat exchanger are isobaric.

(B) Input cycle A working fluid=air, p_1=1 bar, T_1=25EC, $mdot_1$=20.45 kg/s, p_2=7 bar, T_3=850EC, -$Wdot_{12}$=$Wdot_{34}$, T_6=138EC, cycle B working fluid=water, T_7=90EC, p_8=13 bar, and x_8=1.

(C) Display results. The answers are: $Wdot_{compressor}$=-5352 kW, $Wdot_{turbine\#1}$=5352 kW, $Wdot_{turbine\#2}$=3172 kW, $Wdot_{net}$=3172 kW, $Qdot_{comb\ chamber}$=11576 kW, 0=3172/11576=27.40 %, $Qdot_{HX}$=-6086 kW, $mdot_{steam}$=2.53 kg/s, and EUF=(3172+6086)/11576=0.7998.

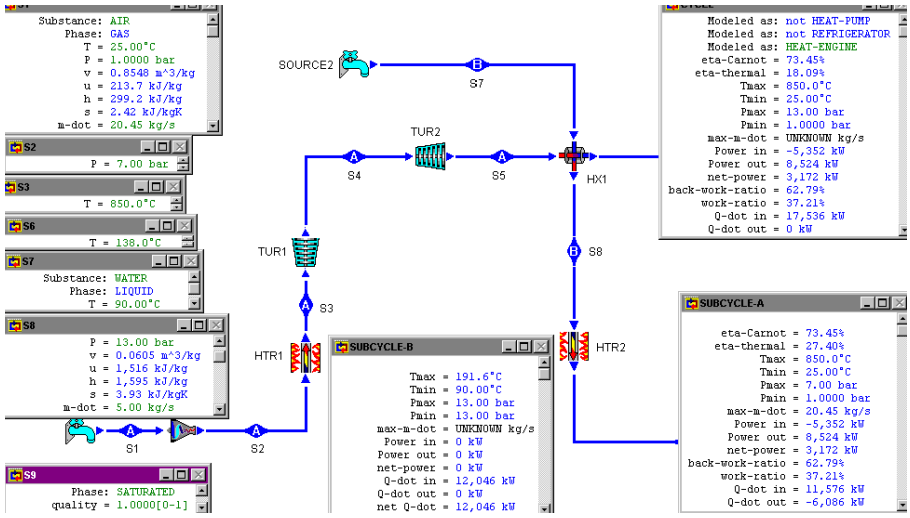

Figure E11.9.4. Co-generation.

Example 11.9.5.

Referring to the dairy factory co-generation design conditions where 5 kg/s of process steam is needed, determine the rate of heat provided by the gas burner.

To solve this problem by CyclePad, we do the same thing as Example 11.9.4, delete x_8=1, and let x_9=1and $mdot_8$=5 kg/s.

The answer are Qdot=5960 kW and and EUF=(3172+6086)/(11576+5960)=0.5279.

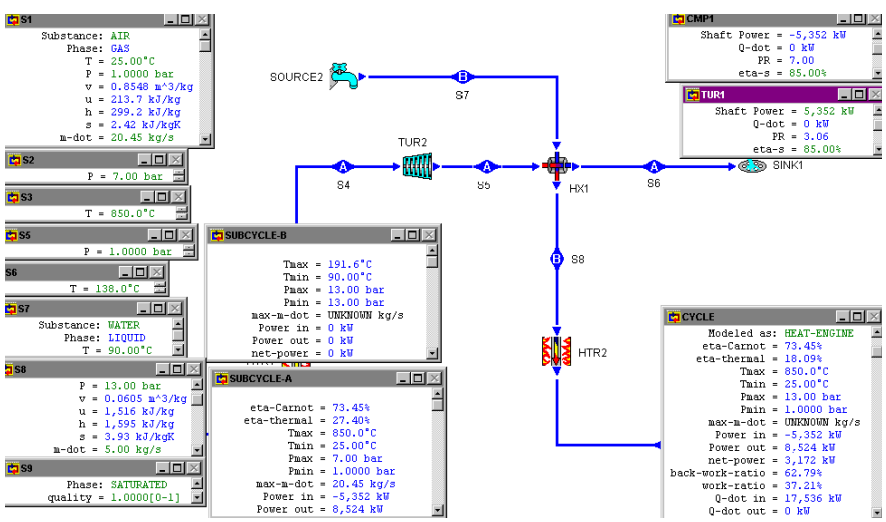

Figure E11.9.5. Co-generation.

Homework 11.9. Co-generation

1. What is co-generation?
2. How is co-generation ratio is defined?
3. How is co-generation energy utility factor is defined?
4. A co-generation cycle as shown in Figure 11.9.1 is to be designed according to the following specifications:

   turbine efficiency=89%, boiler temperature=500EC, boiler pressure=7000 kPa, condenser pressure=5 kPa, process steam (cooler #2) pressure=500 kPa, mass rate flow through the boiler=15 kg/s, and mass rate flow through the turbine=13 kg/s.

   Determine the rate of heat supply, net power output, process heat output, cycle efficiency, co-generation ratio, and energy utility factor of the cycle.

   ANSWER: cycle efficiency=32.01%, rate of heat supply=47980 kW, rate of co-generation heat=-5540 kW.
5. A co-generation cycle as shown in Figure 11.9.1 is to be designed according to the following specifications:

   turbine efficiency=89%, boiler temperature=500EC, boiler pressure=6000 kPa, condenser pressure=5 kPa, process steam (cooler #2) pressure=500 kPa, mass rate flow through the boiler=15 kg/s, and mass rate flow through the turbine=13 kg/s.

   Determine the rate of heat supply, net power output, process heat output, cycle efficiency, co-generation ratio, and energy utility factor of the cycle.

   ANSWER: cycle efficiency=31.63%, rate of heat supply=48173 kW, rate of co-generation heat=-5564 kW.
6. A co-generation cycle as shown in Figure 11.9.1 is to be designed according to the following specifications:

   turbine efficiency=89%, boiler temperature=500EC, boiler pressure=7000 kPa, condenser pressure=5 kPa, process steam (cooler #2) pressure=500 kPa, mass rate flow through the boiler=15 kg/s, and mass rate flow through the turbine=14 kg/s.

   Determine the rate of heat supply, net power output, process heat output, cycle efficiency, co-generation ratio, and energy utility factor of the cycle.

   ANSWER: cycle efficiency=38.38%, rate of heat supply=48482 kW, rate of cogeneration heat=-2770 kW.
7. A co-generation cycle as shown in Figure 11.9.2 is to be designed according to the following specifications:

   high-pressure turbine efficiency=84%, low-pressure turbine efficiency=100%, boiler temperature=400EC, boiler pressure=40 bar, inlet pressure of low-pressure turbine=10 bar, condenser pressure=0.1 bar, process steam (cooler #2) pressure=10 bar, mass rate flow through the boiler=1 kg/s, mass rate flow through the turbine #1=0.98 kg/s, and mass rate flow through the turbine #1=0.95 kg/s.

   Determine the rate of heat supply, net power output, process heat output, cycle efficiency, co-generation ratio, and energy utility factor of the cycle.

   ANSWER: cycle efficiency=33.02%, rate of heat supply=2989 kW, rate of co-generation heat=-113.7 kW.
8. Referring to the dairy factory design (Example 11.9.4) conditions, except that the compressor efficiency is 80% and the mass flow rate of process steam is 4 kg/s,

determine the power required by the compressor, power produced by turbine #1, power produced by turbine #2, rate of heat added to the combustion chamber, net power produced by the open Brayton gas-turbine plant, cycle efficiency of the open Brayton gas-turbine plant, rate of heat added to the process steam, rate of heat added in the gas burner, and energy utility of the co-generation plant.

ANSWER: $Wdot_{compressor}$=-5352 kW, $Wdot_{turbine\#1}$=5352 kW, $Wdot_{turbine\#2}$=3172 kW, $Wdot_{net}$=3172 kW, $Qdot_{comb\ chamber}$=11576 kW, 0=3172/11576=27.40 %, $Qdot_{HX}$=-6086 kW, $Qdot_{gas\ burner}$=2.53 kg/s, and EUF=(3172+6086)/11576=0.7998.

11.10. DESIGN EXAMPLES

One of the purpose of this book is to illuminate elements of conceptual thermodynamic cycle design. In this endeavor, the intent is to build upon and extended information previously acquired in thermodynamics. Possible steps in an intelligent computer aided design process as shown in the following example 11.10.1 involves the following steps:

1. The first step is to identify a need. For example, a power plant manager might decide that use of a combined cycle would increase cycle efficiency.
2. The second step is to develop several conceptual plants (for example Cycle A, Cycle B, and Cycle C) to meet the identified need. One of the several plants is shown in example 11.10.1. In example 11.10.1, a three-stage regenerative steam Rankine cycle and a four-stage inter-cool and four-stage reheat air Brayton cycle are combined to meet the need.
3. The third step is to model the components of the conceptual plant. For example, a steam turbine may be modeled as an adiabatic process with 85% isentropic efficiency.
4. The fourth step is to estimate input numerical values for the major parameters. For example, the inlet gas temperature to a gas turbine is 1200EC based on physical feasibility.
5. The fifth step is to analyze the conceptual thermodynamic cycle.
6. The sixth step is to refine and optimize the conceptual thermodynamic cycle with sensitivity analysis.
7. The seventh step is to compare the optimal cycles and choose the best cycle.

Example 11.10.1.

A 3-stage regenerative steam Rankine cycle and a 4-stage inter-cool and 4-stage reheat air Brayton cycle is combined by a heat exchanger as shown in Figure E11.10.1a has been designed by a junior engineer with the following design input information as shown in Figure E11.10.1b:

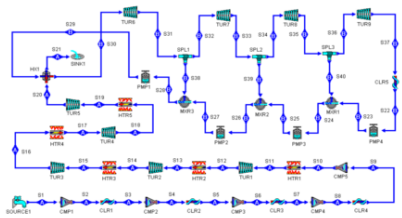

Figure E11.10.1a. Combined Brayton-Rankine cycle.

The preliminary design information is:

Brayton Cycle

p_1=100 kPa, T_1=20EC, p_3=200 kPa, T_3=20EC, p_5=300 kPa, T_5=20EC, p_7=500 kPa, T_7=20EC, p_9=800 kPa, T_9=20EC, p_{11}=1200 kPa, T_{11}=1200EC, p_{13}=800 kPa, T_{13}=1200EC, p_{15}=500 kPa, T_{15}=1200EC, p_{17}=300 kPa, T_{17}=1200EC, p_{19}=200 kPa, T_{19}=1200EC, p_{20}=100 kPa, T_{21}=550EC, $mdot_1$=1 kg/s, 0_{tur1}=0_{tur2}=0_{tur3}=0_{tur4}=0_{tur5}=85%, and 0_{cmp1}=0_{cmp2}=0_{cmp3}=0_{cmp4}=0_{cmp5}=85%.

Rankine Cycle

p_{22}=7 kPa, x_{22}=0, p_{24}=2000 kPa, x_{24}=0, p_{26}=4000 kPa, x_{26}=0, p_{28}=8000 kPa, x_{28}=0, p_{30}=12000 kPa, T_{30}=500EC, 0_{tur6}=0_{tur7}=0_{tur8}=0_{tur9}=85%, and 0_{pmp1}=0_{pmp2}=0_{pmp3}=0_{pmp4}=85%.

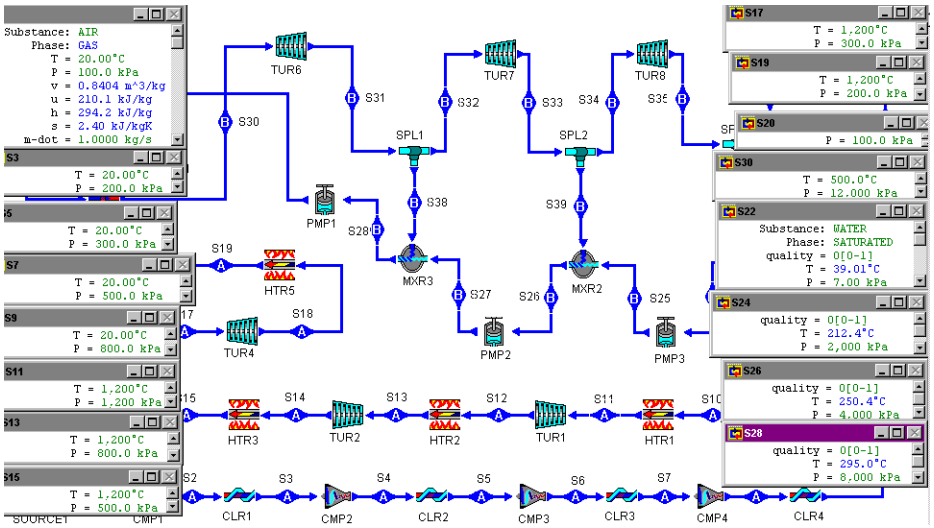

Figure E11.10.1b. Combined Brayton-Rankine cycle input.

The following output results as shown in Figure 11.10.1c are obtained from his design:

Combined Cycle

0_{cycle}=41.67%, $Wdot_{input}$=-280.1 kW, $Wdot_{output}$=1007 kW, $Wdot_{net\ output}$=727.1 kW, $Qdot_{add}$=1745 kW, $Qdot_{remove}$=-486.0 kW.

Brayton Cycle

0_{cycle}=32.33%, $Wdot_{input}$=-264.9 kW, $Wdot_{output}$=829.1 kW, $Wdot_{net\ output}$=564.2 kW, $Qdot_{add}$=1745 kW, $Qdot_{remove}$=-648.9 kW, $Wdot_{cmp1}$=-75.79 kW, $Wdot_{cmp2}$=-42.50 kW, $Wdot_{cmp3}$=-54.38 kW, $Wdot_{cmp4}$=-49.74 kW, $Wdot_{cmp5}$=-42.50 kW, $Wdot_{tur1}$=137.4 kW, $Wdot_{tur2}$=157.9 kW, $Wdot_{tur3}$=170.6 kW, $Wdot_{tur4}$=137.4 kW, $Wdot_{tur5}$=225.7 kW, $Qdot_{clr1}$=-75.79 kW, $Qdot_{clr2}$=-42.50 kW, $Qdot_{clr3}$=-54.38 kW, $Qdot_{clr4}$=-49.74 kW, $Qdot_{htr1}$=1142 kW, $Qdot_{htr2}$=137.4 kW, $Qdot_{htr3}$=157.9 kW, $Qdot_{htr4}$=170.6 kW, $Qdot_{htr5}$=137.4 kW, $Qdot_{heat\ exch}$=-426.5 kW.

Rankine Cycle

0_{cycle}=38.20%, $Wdot_{input}$=-15.20 kW, $Wdot_{output}$=178.1 kW, $Wdot_{net\ output}$=162.9 kW, $Qdot_{add}$=426.5 kW, $Qdot_{remove}$=-263.6 kW, $Wdot_{pmp1}$=-13.26 kW, $Wdot_{pmp2}$=-1.14 kW, $Wdot_{pmp3}$=-0.4943 kW, $Wdot_{pmp4}$=-0.3131 kW, $Wdot_{tur6}$=22.91 kW, $Wdot_{tur7}$=31.64 kW, $Wdot_{tur8}$=25.56 kW, $Wdot_{tur9}$=98.01 kW, $Qdot_{clr5}$=-263.6 kW, $Qdot_{heat\ exch}$=426.5 kW,

$mdot_{24}$=0.1782 kg/s, $mdot_{26}$=0.1939 kg/s, $mdot_{28}$=0.2164 kg/s, $mdot_{31}$=0.2164 kg/s, $mdot_{32}$=0.1939 kg/s, $mdot_{34}$=0.1782 kg/s, $mdot_{36}$=0.1304 kg/s, $mdot_{38}$=0.0225 kg/s, $mdot_{39}$=0.0157 kg/s, and $mdot_{40}$=0.0478 kg/s.

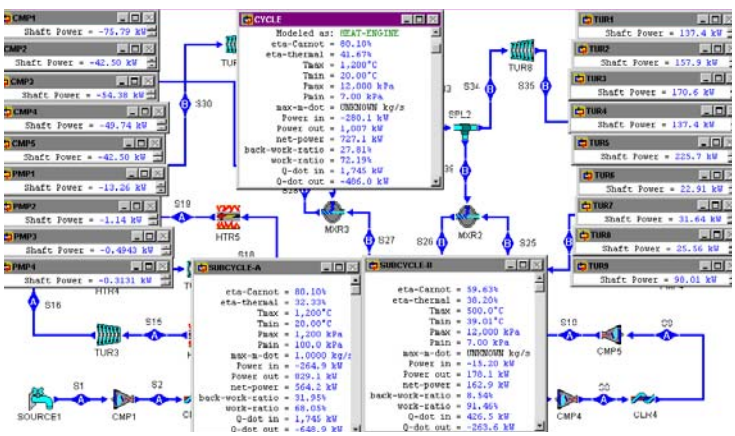

Figure E11.10.1c. Combined Brayton-Rankine cycle output.

Let us try to modify his design (use p_5, p_7, p_{15}, and p_{17} as design parameters only) to get a better cycle thermal efficiency than his 0_{cycle}=41.67%.

The sensitivity analysis of 0_{cycle} versus p_5, 0_{cycle} versus p_7, 0_{cycle} versus p_{15}, and 0_{cycle} versus p_{17} are shown in the following diagrams. The optimization design values of p_5, p_7, p_{15} and p_{18} can be easily identified.

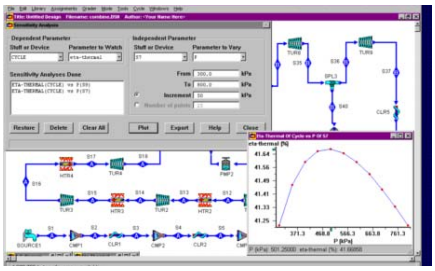

Figure E11.10.1d. Combined Brayton-Rankine cycle sensitivity diagram.

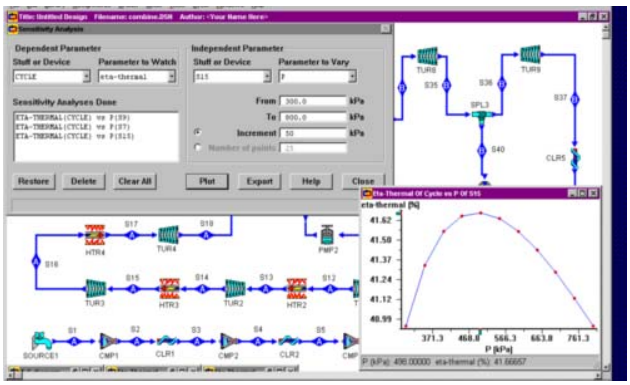

Figure E11.10.1e. Combined Brayton-Rankine cycle sensitivity diagram.

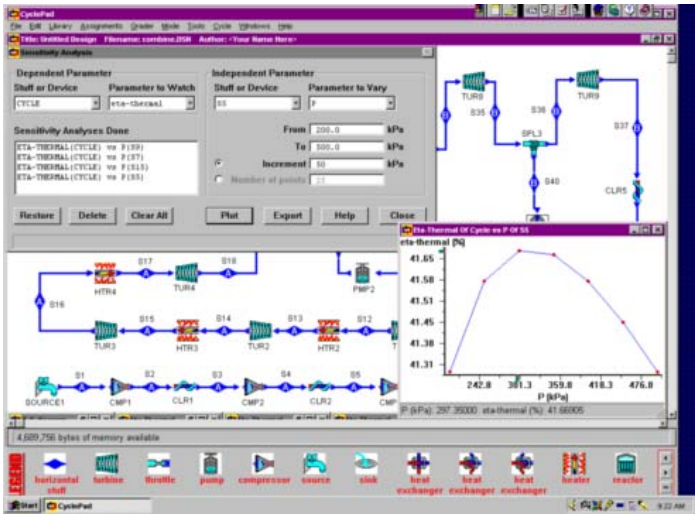

Figure E11.10.1f. Combined Brayton-Rankine cycle sensitivity diagram.

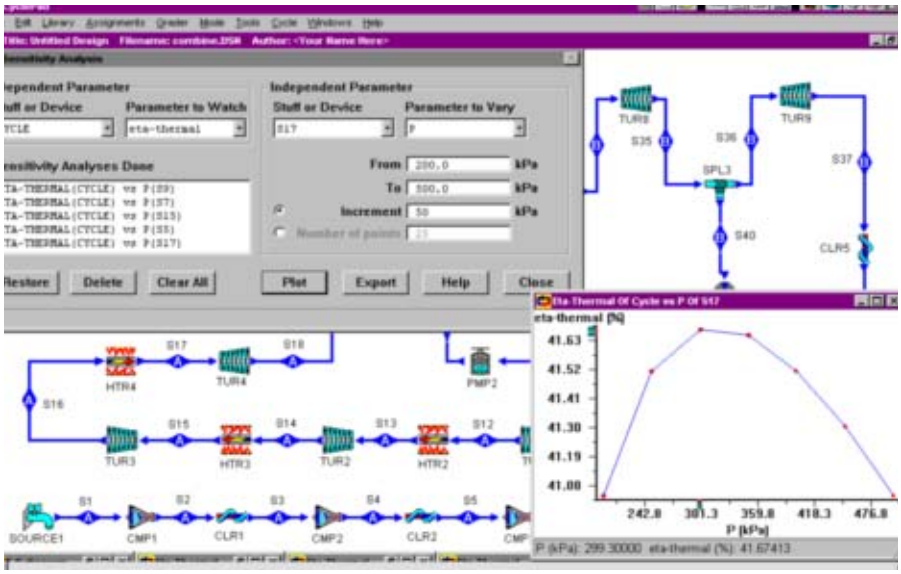

Figure E11.10.1g. Combined Brayton-Rankine cycle sensitivity diagram.

Homework 11.10. Design

1. A 3-stage regenerative steam Rankine cycle and a 4-stage inter-cool and 4-stage reheat air Brayton cycle combined with a heat exchanger, as shown in Figure 11.10.1a, has been designed by a junior engineer with the following design input information:

   Brayton cycle

   p_1=100 kPa, T_1=20EC, p_3=200 kPa, T_3=20EC, p_5=300 kPa, T_5=20EC, p_7=500 kPa, T_7=20EC, p_9=800 kPa, T_9=20EC, p_{11}=1200 kPa, T_{11}=1300EC, p_{13}=800 kPa, T_{13}=1300EC, p_{15}=500 kPa, T_{15}=1300EC, p_{17}=300 kPa, T_{17}=1300EC, p_{19}=200 kPa, T_{19}=1300EC, p_{20}=100 kPa, T_{21}=550EC, $mdot_1$=1 kg/s, 0_{tur1}=0_{tur2}=0_{tur3}=0_{tur4}=0_{tur5}=85%, and 0_{cmp1}=0_{cmp2}=0_{cmp3}=0_{cmp4}=0_{cmp5}=85%.

   Rankine cycle

   p_{22}=7 kPa, x_{22}=0, p_{24}=2000 kPa, x_{24}=0, p_{26}=4000 kPa, x_{26}=0, p_{28}=8000 kPa, x_{28}=0, p_{30}=12000 kPa, T_{30}=500EC, 0_{tur6}=0_{tur7}=0_{tur8}=0_{tur9}=85%, and 0_{pmp1}=0_{pmp2}=0_{pmp3}=0_{pmp4}=85%.

   The following output results are obtained from his design:

   Combined cycle

   0_{cycle}=43.26%, $Wdot_{input}$=-283.2 kW, $Wdot_{output}$=1099 kW, $Wdot_{net\ output}$=815.9 kW, $Qdot_{add}$=1886 kW, $Qdot_{remove}$=-538.5 kW.

   Try to improve his design (use p_3, p_5, p_7, p_9, p_{24}, p_{26}, and p_{28} as design parameters only) and get a better cycle thermal efficiency than his 0_{cycle}=43.26%.

2. A 3-stage regenerative steam Rankine cycle and a 4-stage inter-cool and 4-stage reheat air Brayton cycle combined with a heat exchanger, as shown in Figure

11.10.1a, has been designed by a junior engineer with the following design input information:

Brayton cycle

p_1=100 kPa, T_1=20EC, p_3=200 kPa, T_3=20EC, p_5=300 kPa, T_5=20EC, p_7=500 kPa, T_7=20EC, p_9=800 kPa, T_9=20EC, p_{11}=1200 kPa, T_{11}=1300EC, p_{13}=800 kPa, T_{13}=1300EC, p_{15}=500 kPa, T_{15}=1300EC, p_{17}=300 kPa, T_{17}=1300EC, p_{19}=200 kPa, T_{19}=1300EC, p_{20}=100 kPa, T_{21}=550EC, $mdot_1$=1 kg/s, 0_{tur1}=0_{tur2}=0_{tur3}=0_{tur4}=0_{tur5}=85%, and 0_{cmp1}=0_{cmp2}=0_{cmp3}=0_{cmp4}=0_{cmp5}=88%.

Rankine cycle

p_{22}=7 kPa, x_{22}=0, p_{24}=2000 kPa, x_{24}=0, p_{26}=4000 kPa, x_{26}=0, p_{28}=8000 kPa, x_{28}=0, p_{30}=12000 kPa, T_{30}=500EC, 0_{tur6}=0_{tur7}=0_{tur8}=0_{tur9}=85%, and 0_{pmp1}=0_{pmp2}=0_{pmp3}=0_{pmp4}=85%.

The following output results are obtained from his design:

Combined cycle

0_{cycle}=43.70%, $Wdot_{input}$=-274.1 kW, $Wdot_{output}$=1099 kW, $Wdot_{net\ output}$=824.9 kW, $Qdot_{add}$=1888 kW, $Qdot_{remove}$=-530.9 kW.

Try to improve his design (use p_3, p_5, p_7, p_9, p_{24}, p_{26}, and p_{28} as design parameters only) and get a better cycle thermal efficiency than his 0_{cycle}=43.70%.

11.11. SUMMARY

Combined- and cascaded-cycle heat engines of several types discussed in the chapter can improve cycle efficiency and reduce the fuel required for producing work or electric energy. Most combined cycles are coupled in a cascaded arrangement with the heat being rejected from one cycle serving as the heat supply for another cycle. The hot exhaust gases from a gas turbine Brayton cycle can be used in the boiler of a steam Rankine cycle to produce work. Many different combined cycles are possible.

In a similar fashion, co-generation which produces thermal energy and electric energy can also result in significant energy savings. Cogeneration plants use the same fuel source to produce both work and heat. The heat can be used for heating or in a process facility adjacent to the cogeneration facility. The advantage of cogeneration lies in the fact that both work and heat for an intended use can be accomplished with a total fuel expendiyure that is less than would be required to produce them individually.

Chapter 12

REFRIGERATION AND HEAT PUMP CYCLES

12.1. CARNOT REFRIGERATOR AND HEAT PUMP

A system is called a refrigerator or a heat pump depending on the purpose of the system. If the purpose of the system is to remove heat from a low temperature thermal reservoir, it is a refrigerator. If the purpose of the system is to deliver heat to a high temperature thermal reservoir, it is a heat pump.

Carnot cycle is a reversible cycle. Reversing the cycle will also reverse the directions of heat and work interactions. The reversed Carnot heat engine cycles are Carnot refrigeration and Carnot heat pump cycles. Therefore a reversed Carnot vapor heat engine is either a Carnot vapor refrigerator or a Carnot vapor heat pump depending upon the function of the cycle.

A schematic diagram of the *Carnot refrigerator* or *Carnot heat pump* is illustrated in Figure 12.1.1.

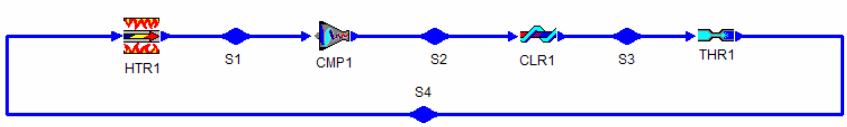

Figure 12.1.1. Carnot refrigerator or Carnot heat pump.

1-2 isentropic compression
2-3 isothermal cooling
3-4 isentropic expansion
4-1 isothermal heating

Applying the First law and Second law of thermodynamics of the open system to each of the four processes of the basic vapor refrigeration cycle at steady flow and steady state condition yields:

$$Q_{12} = 0 \tag{12.1.1}$$

$$0 - W_{12} = m(h_2 - h_1) \tag{12.1.2}$$

$$W_{23} = 0 \tag{12.1.3}$$

$$Q_{23} - 0 = m(h_3 - h_2) \tag{12.1.4}$$

$$Q_{34} = 0 \tag{12.1.5}$$

$$0 - W_{34} = m(h_3 - h_4) \tag{12.1.6}$$

$$W_{41} = 0 \tag{12.1.7}$$

and

$$Q_{41} - 0 = m(h_1 - h_4) \tag{12.1.8}$$

The desirable energy output of the refrigeration cycle is the heat added to the evaporator (or heat removed from the inner space or the low temperature reservoir of the refrigerator). The energy input to the cycle is the compressor work required. The energy produced is the turbine work. The net work (W_{net}) required to operate the cycle is (W_{12}+W_{34}). Thus the coefficient of performance (COP) of the cycle is

$$\exists_R = Q_{41} / W_{net} \tag{12.1.9}$$

The rate of the heat removed from the inner space of the refrigerator is called cooling load or cooling capacity. The cooling load of a refrigeration system is sometimes giving a unit in tons of refrigeration. A *ton of refrigeration* is the removal of heat from the cold space at a rate of 200 Btu/min (12000 Btu/h) or 211 kJ/min (3.52 kW). A ton of refrigeration is the rate of cooling required to make a ton of ice per day.

Example 12.1.1.

Determine the COP, horsepower required and cooling load of a Carnot vapor refrigeration cycle using R-12 as the working fluid in which the condenser temperature is 100EF and the evaporation temperature is 20EF. The circulation rate of fluid is 0.1 lbm/s. Determine the compressor power required, turbine power produced, net power required, cooling load, quality at the inlet of the evaporator, quality at the inlet of the compressor, and COP of the refrigerator.

To solve this problem by CyclePad, we take the following steps:

1. Build
   (A) Take a compressor, a cooler (condenser), a turbine, and a heater (evaporator) from the open system inventory shop and connect the four devices to form the basic vapor refrigeration cycle.
   (B) Switch to analysis mode.

2. Analysis
   (A) Assume a process for each of the four devices: (a) compressor as isentropic, (b) condenser as isobaric, (c)turbine as isentropic,, and (d) evaporator as isobaric.
   (B) Input the given information: (a) working fluid is R-12, (b) the inlet temperature and quality of the compressor are 20EF and 1, (c) the inlet temperature and quality of the turbine are 100EF and 0, (d) the phase of the exit refrigerant from the turbine is saturated mixture, and (e) the mass flow rate is 0.1 lbm/s.
3. Display results

Display the cycle properties results. The cycle is a refrigerator. The answers are the compressor power required=-1.36 hp, turbine power produced=0.2234 hp, net power required=-1.13 hp, cooling load=4.79 Btu/s,, quality at the inlet of the evaporator=0.2504, and COP=5.99

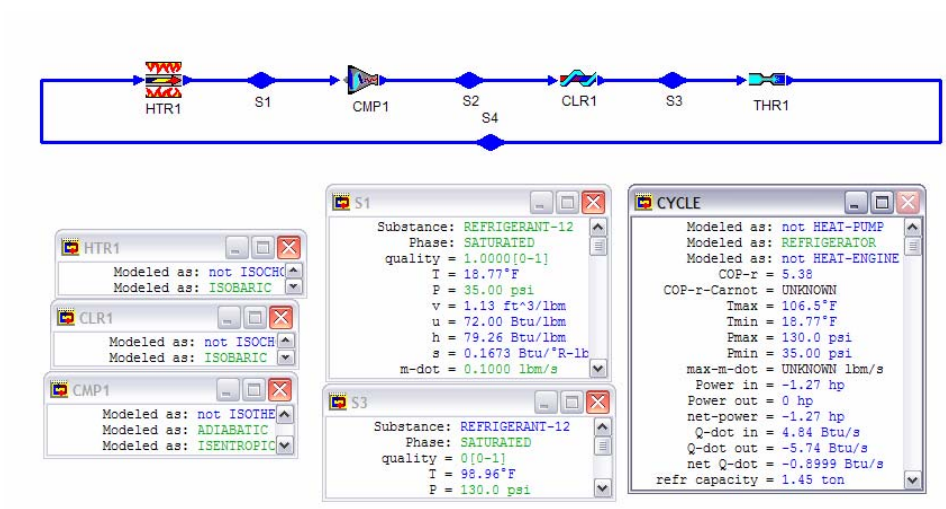

Figure E12.1.1. Carnot vapor refrigeration cycle.

Comments: 1. The turbine work produced is very small. It does not pay to install an expansive device to produce a small amount of work. The expansion process can be achieved by a simple throttling valve. 2. The compressor handles the refrigerant as a mixture of saturated liquid and saturated vapor. It is not practical. Therefore, the compression process should be move out of the mixture region to the superheated region.

Homework 12.1. Carnot Refrigerator and Heat Pump

1. Does the area enclosed by the Carnot heat pump cycle on a T-s diagram represent the net work input for the heat pump?
2. Does the Carnot heat pump cycle involve any internal irreversibilities?

12.2. BASIC VAPOR REFRIGERATION CYCLE

The Carnot refrigerator is not a practical cycle, because the compressor is designed to handle superheated vapor or gas. The turbine in the small temperature and pressure range produces very small amount work. It is not worth of to have an expensive turbine in the cycle to produce a very small amount of work. Therefore the Carnot refrigeration cycle is modified to have the compression process completely in the superheated region and the turbine is replaced by an inexpensive throttling valve termed thermal expansion valve to form a basic vapor refrigeration cycle. The schematic diagram of the basic vapor refrigeration system is shown in Figure 12.2.1. The components of the *basic vapor refrigeration cycle* include a compressor, a condenser, an expansion valve and an evaporator. The T-s diagram of the cycle is shown in Figure 12.2.2. Notice that the throttling process 3-4 is an irreversible process and is indicated by a broken line on the T-s diagram.

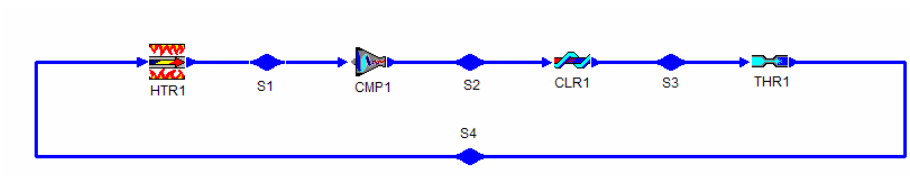

Figure 12.2.1. Basic vapor refrigeration system.

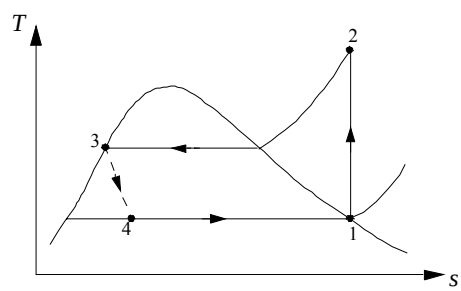

Figure 12.2.2. T-s diagram of the basic vapor refrigeration cycle.

The basic vapor refrigeration cycle consists of the following four processes:

1-2	isentropic compression
2-3	isobaric cooling
3-4	throttling
4-1	isobaric heating

Applying the First law and Second law of thermodynamics of the open system to each of the four processes of the basic vapor refrigeration cycle yields:

$$Q_{12} = 0 \tag{12.2.1}$$

$$0 - W_{12} = m(h_2 - h_1) \tag{12.2.2}$$

$$W_{23} = 0 \tag{12.2.3}$$

$$Q_{23} - 0 = m(h_3 - h_2) \tag{12.2.4}$$

$$Q_{34} = 0 \text{ and } W_{34} = 0 \tag{12.2.5}$$

$$0 - 0 = m(h_3 - h_4) \tag{12.2.6}$$

$$W_{41} = 0 \tag{12.2.7}$$

and

$$Q_{41} - 0 = m(h_1 - h_4),\backslash \tag{12.2.8}$$

The desirable energy output of the basic vapor refrigeration cycle is the heat added to the evaporator (or heat removed from the inner space of the refrigerator, Q_{41}). The energy input to the cycle is the compressor work required (W_{12}). Thus the coefficient of performance (COP) of the basic refrigeration cycle is

$$\exists_R = Q_{41} / W_{12} = (h_4 - h_1)/(h_2 - h_1) \tag{12.2.9}$$

The rate of the heat removed from the inner space of the refrigerator is called cooling load or cooling capacity. The cooling load of a refrigeration system is sometimes giving a unit in tons of refrigeration. A ton of refrigeration is the removal of heat from the cold space at a rate of 12000 Btu/h.

Example 12.2.1.

Determine the COP, horsepower required and cooling load of a basic vapor refrigeration cycle using R-12 as the working fluid in which the condenser pressure is 130 psia and the evaporation pressure is 35 psia. The circulation rate of fluid is 0.1 lbm/s. Determine the compressor power required, cooling load, quality at the inlet of the evaporator, and COP of the refrigerator.

To solve this problem by CyclePad, we take the following steps:

1. Build
   (A) Take a compressor, a condenser, a valve, and a heater (evaporator) from the open system inventory shop and connect the four devices to form the basic vapor refrigeration cycle.
   (B) Switch to analysis mode.

2. Analysis
   (A) Assume a process for each of the four devices: (a) compressor as isentropic, (b) condenser as isobaric, (c) valve as constant enthalpy, and (d) evaporator as isobaric.
   (B) Input the given information: (a) working fluid is R-12, (b) the inlet pressure and quality of the compressor are 35 psia 20EF and 1, (c) the inlet pressure and quality of the valve are 130 psia and 0, and (d) the mass flow rate is 0.1 lbm/s.
3. Display results

Display the cycle properties results. The cycle is a refrigerator. The answers are the compressor power required=-1.27 hp, cooling load=4.84 Btu/s=1.45 ton, quality at the inlet of the evaporator=0.2738, and COP=5.38.

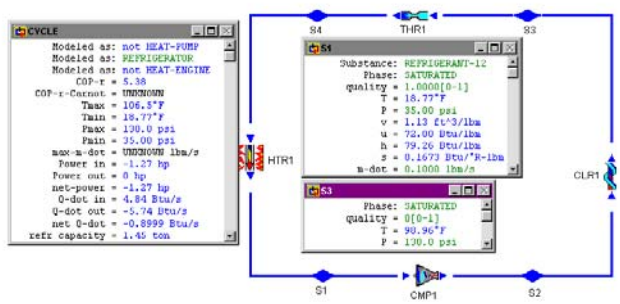

Figure E12.2.1. Basic vapor refrigeration cycle.

Example 12.2.2.

Determine the COP, horsepower required and cooling load of a basic vapor refrigeration cycle using R-12 as the working fluid in which the condenser pressure is 130 psia and the evaporation pressure is 35 psia. The circulation rate of fluid is 0.1 lbm/s. The temperature of the refrigerant at the exit of the compressor is 117EF. Determine the compressor power required, cooling load, quality at the inlet of the evaporator, and COP of the refrigerator.

To solve this problem by CyclePad, we take the following steps:

1. Build
   (A) Take a compressor, a condenser, a valve, and a heater (evaporator) from the open system inventory shop and connect the four devices to form the basic vapor refrigeration cycle.
   (B) Switch to analysis mode.
2. Analysis
   (A) Assume a process for each of the four devices: (a) compressor as adiabatic, (b) condenser as isobaric, (c) valve as constant enthalpy, and (d) evaporator as isobaric.
   (B) Input the given information: (a) working fluid is R-12, (b) the inlet pressure and quality of the compressor are 35 psia and 1, (c) the temperature of the refrigerant

at the exit of the compressor is 117EF, (d) the inlet pressure and quality of the valve are 130 psia and 0, and (e) the mass flow rate is 0.1 lbm/s.

3. Display results

Display the cycle properties results. The cycle is a refrigerator. The answers are the compressor power required=-1.54 hp, cooling load=4.84 Btu/s=1.45 ton, quality at the inlet of the evaporator=0.2738, and COP=4.44.

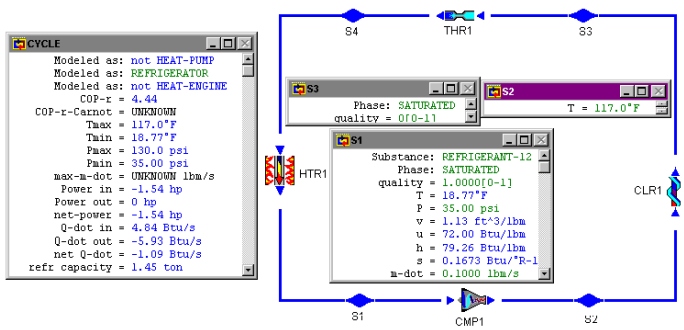

Figure E12.2.2. Actual vapor refrigeration cycle.

Homework 12.2. Basic vapor refrigeration cycle

1. Why is the Carnot refrigeration cycle executed within the saturation dome not a realistic model for refrigeration cycles?
2. What is the difference between a refrigerator and a heat pump?
3. Why is the throttling valve not replaced by an isentropic turbine in the ideal refrigeration cycle?
4. What is the area enclosed by the refrigeration cycle on a T-s diagram?
5. Does the ideal vapor compression refrigeration cycle involve any internal irreversibility?
6. In an ideal refrigeration cycle, indicate whether the following statements are true or false:
   (A) All the processes are internally reversible.
   (B) COP equals that of a Carnot cycle.
   (C) COP increases with the evaporator temperature.
   (D) COP increases with the condenser temperature.
   (E) The pressure at the compressor outlet depends the evaporator temperature.
   (F) The lowest pressure in the cycle is atmospheric.
   (G) The entropy change of the refrigerant across the evaporator is negative.
   (H) The entropy of the refrigerant increases upon passing through the throttle valve.
   (I) The evaporator temperature is higher than that of the surroundings.
   (J) The condenser temperature is lower than that of the surroundings.
   (K) COP always larger than 1.

7. A steady flow ideal 0.4 tons refrigerator use refrigerant R134a as the working fluid. The evaporator pressure is 120 kPa. The condenser pressure is 600 kPa. Determine (A) the mass rate flow, (B) the compressor power required, (C) the rate of heat absorbed from the refrigerated space, (D) the rate of heat removed from the condenser, and (E) the COP.
   ANSWER: (A) 0.0091 kg/s, (B) -33.38 kJ/kg, (C) 1.41 kW, (D) -1.71 kW, and (E) 4.64.
8. An actual vapor compression refrigeration cycle operates at steady state with refrigerant 134a as the working fluid. Saturated vapor enters the compressor at 263 K. Superheated vapor enters the condenser at 311 K. Saturated liquid leaves the condenser at 301 K. The mass flow rate of refrigerant is 0.1 kg/s. Determine (A) the cooling load, (B) the compressor work required, (C) the condenser pressure, (D) the rate of heat removed from the condenser, (E) the compressor efficiency, and (F) the COP.
   ANSWER: (A) 4.36 ton, (B) -32.01 kJ/kg, (C) 726 kPa, (D) -18.55 kW, (E) 83.35%, and (F) 4.80.
9. An actual vapor compression refrigeration cycle operates at steady state with refrigerant 134a as the working fluid. The evaporator pressure is 120 kPa. The condenser pressure is 600 kPa. The mass flow rate of refrigerant is 0.1 kg/s. The efficiency of the compressor is 85%. Determine (A) the compressor power, (B) the refrigerating capacity, and (C) the coefficient of performance (COP).
   ANSWER: (A) -3.34 kW, (B) 4.40 ton, and (C) 4.64.
10. Refrigerant R134a enters the compressor of a steady flow vapor compression refrigeration cycle as superheated vapor at 0.14 Mpa and -10EC at a rate of 0.04 kg/s, and it leaves at 0.7 Mpa and 50EC. The refrigerant is cooled in the condenser to 24EC and saturated liquid. Determine (A) the compressor power required, (B) the rate of heat absorbed from the refrigerated space, (C) the compressor efficiency, and (D) the COP.
    ANSWER: (A) -35.18 kJ/kg, (B) 6.43 kW, (C) 42.38 C, and (D) 4.57.
11. Find the compressor power required, quality of the refrigerant at the end of the throttling process, cooling load and COP for a refrigerator that uses refrigerant-12 as the working fluid and is designed to operate at an evaporator temperature of 5EC and a condenser temperature of 30EC. The compressor efficiency is 68 percent. The mass rate flow of refrigerant 12 is 0.22 kg/s.
    ANSWER: -4.10 kW, 0.1604, 7.82 ton, and 6.72.
12. Consider an ideal refrigerator which uses refrigerant-12 as the working fluid. The temperature of the refrigerant in the evaporator is -10EC and in the condenser it is 38EC. The refrigerant is circulated at the rate of 0.031 kg/s. Determine the compressor power required, quality of the refrigerant at the end of the throttling process, cooling load and COP of the refrigerator.
    ANSWER: -0.7368 kW, 0.2923, 0.9752 ton, and 4.65.
13. An ideal refrigerator uses ammonia as the working fluid. The temperature of the refrigerant in the evaporator is 20EF and the pressure in the condenser is 140 psia. The refrigerant is circulated at the rate of 0.051 lbm/s. Determine the compressor power required, cooling load and COP of the refrigerator.

ANSWER: -4.58 hp, 7.52 ton, and 7.74.

14. An ice-making machine operates on an ideal refrigeration cycle using refrigerant-134a. The refrigerant enters the compressor as saturated vapor at 20 psia and leaves the condenser as saturated liquid at 80 psia. For 1 ton (12,000 Btu/h) of refrigeration, determine the compressor power required, mass rate flow of refrigerant-134a, and COP of the refrigerator.
    ANSWER: -0.8378 hp, 0.0482 lbm/s, and 5.63.
15. An ice-making machine operates on an ideal refrigeration cycle using refrigerant-134a. The refrigerant enters the compressor at 18 psia and 0EF, and leaves the condenser at 125 psia and 90EF. For 1 ton (12,000 Btu/h) of refrigeration, determine the compressor power required, mass rate flow of refrigerant-134a, and COP of the refrigerator.
    ANSWER: -1.37 hp, 0.0542 lbm/s, and 3.44.
16. Find the compressor power required, cooling load and COP for a refrigerator that uses refrigerant-12 as the working fluid and is designed to operate at an evaporator temperature of 5EC and a condenser temperature of 30EC. The mass flow rate of refrigerant 12 is 0.22 kg/s.
    ANSWER:-2.79 kW, 7.82 ton, and 9.88.
17. Consider a 2-ton (24,000 Btu/h) air conditioning unit that operates on an ideal refrigeration cycle with refrigerant-134a as the working fluid. The refrigerant enters the compressor as saturated vapor at 140 kPa and is compressed to 800 kPa. Determine the compressor power required, mass rate flow of refrigerant-134a, quality of the refrigerant at the end of the throttling process, and COP of the refrigerator.
    ANSWER: -1.96 kW, 0.0636 kg/s, 0.3165, and 3.59.

12.3. ACTUAL VAPOR REFRIGERATION CYCLE

The actual vapor refrigeration cycle deviates from the ideal cycle primarily because of the inefficiency of the compressor as shown in Figure 12.3.1.

In industry, pressure drops associated with fluid flow and heat transfer to or from the surroundings are also considered. The vapor that enters the compressor is usually superheated rather than at saturated vapor state. The degree of superheat of the refrigerant at the inlet of the compressor determines the extent of opening of the expansion valve. This is a principal way to control the refrigeration cycle. The refrigerant that enters the throttling valve is usually compressed rather than at saturated liquid state. The T-s diagram of the actual vapor refrigeration cycle is shown in Figure 12.3.2.

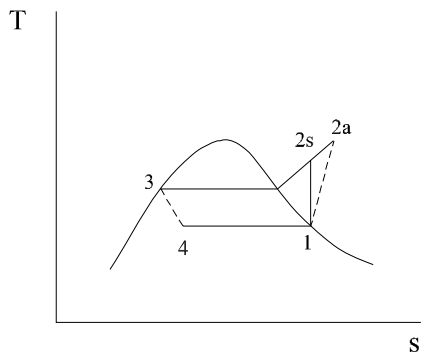

Figure 12.3.1. T-s diagram of actual vapor refrigeration cycle.

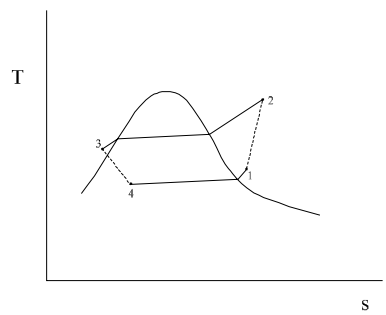

Figure 12.3.2. T-s diagram of actual vapor refrigeration cycle.

Example 12.3.1.

Determine the COP, horsepower required and cooling load of an actual air conditioning unit using R-12 as the working fluid. The refrigerant enters the compressor at 100 kPa and 5EC. The compressor efficiency is 87%. The refrigerant enters the throttling valve at 1.2 MPa and 45EC. The circulation rate of fluid is 0.05 kg/s. Show the cycle on T-s diagram. Determine the COP and cooling load of the air conditioning unit, and the power required for the compressor. Plot the sensitivity diagram of COP vs condenser pressure.

To solve this problem by CyclePad, we take the following steps:

1. Build
   (A) Take a compressor, a condenser, a valve, and a heater (evaporator) from the open system inventory shop and connect the four devices to form the actual vapor refrigeration cycle.
   (B) Switch to analysis mode.
2. Analysis
   (A) Assume a process for each of the four devices: (a) compressor as adiabatic, (b) condenser as isobaric, (c) valve as constant enthalpy, and (d) evaporator as isobaric.

(B) Input the given information: (a) working fluid is R-12, (b) the inlet temperature and pressure of the compressor are 5EC and 100 kPa, (c) the inlet pressure and temperature of the valve are 1.2 MPa and 45EC, (d) the mass flow rate is 0.05 kg/s, and (e) The compressor efficiency is 87%.

3. Display results

Display the T-s diagram and cycle properties results. The cycle is a refrigerator. The answers are COP=2.09, cooling load=5.88 kW=1.67 ton, and net power input=-2.81 kW, and (B) Display the sensitivity diagram of cycle COP vs condenser pressure as shown in Figure E12.3.1b.

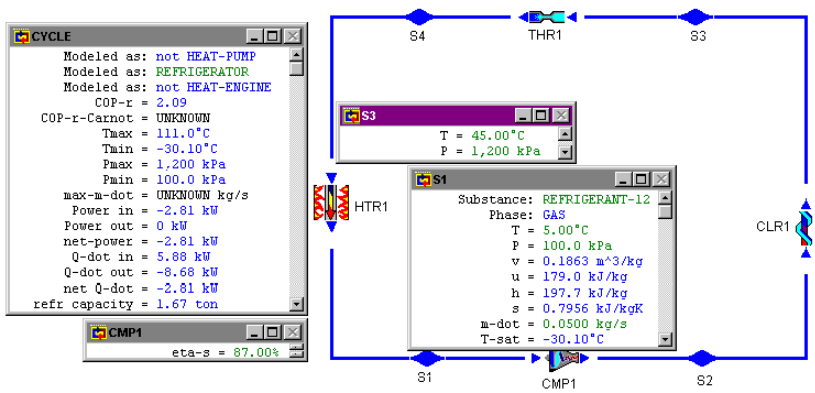

Figure E12.3.1a. Actual refrigeration cycle.

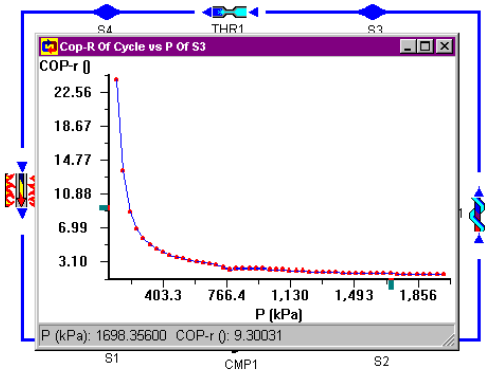

Figure E12.3.1b. Actual refrigeration cycle sensitivity analysis.

Homework 12.3. Actual Vapor Refrigeration Cycle

1. Does the ideal vapor refrigeration cycle involve any internal irreversibility?
2. Why is the inlet state of the compressor of the actual vapor refrigeration cycle in the superheated vapor region?

3. Why is the inlet state of the throttling process of the actual vapor refrigeration cycle in the compressed liquid region?
4. R-134a enters the compressor of an actual refrigerator at 140 kPa and -10EC at a rate of 0.05 kg/s and leaves at 800 kPa. The compressor efficiency is 80%. The refrigerant is cooled in the condenser to 26EC. Determine the rate of heat added, rate of heat removed, power input, cooling load, and COP of the actual refrigerator.
   ANSWER: 7.88 kW, -10.27 kW, -2.39 kW, 2.24 Ton, and 3.30.
5. R-22 enters the compressor of an actual refrigerator at 140 kPa and -10EC at a rate of 0.05 kg/s and leaves at 800 kPa. The compressor efficiency is 80%. The refrigerant is cooled in the condenser to 26EC. Determine the rate of heat added, rate of heat removed, power input, cooling load, and COP of the actual refrigerator.
   ANSWER: 6.19 kW, -8.24 kW, -2.05 kW, 1.76 Ton, and 3.02.
6. Ammonia enters the compressor of an actual refrigerator at 140 kPa and -10EC at a rate of 0.05 kg/s and leaves at 800 kPa. The compressor efficiency is 80%. The refrigerant is cooled in the condenser to 26EC. Determine the rate of heat added, rate of heat removed, power input, cooling load, and COP of the actual refrigerator.
   ANSWER: 59.78 kW, -76.60 kW, -16.82 kW, 17.00 Ton, and 3.56.

12.4. BASIC VAPOR HEAT PUMP CYCLE

A system is called a refrigerator or a heat pump depending on the purpose of the system. If the purpose of the system is to remove heat from a low temperature thermal reservoir, it is a refrigerator. If the purpose of the system is to deliver heat to a high temperature thermal reservoir, it is a heat pump. Consequently, the methodology of analysis for heat pump is identical to that for refrigerator.

The schematic diagram of a basic vapor heat pump is shown in Figure 12.4.1. The components of the basic vapor heat pump include a compressor, a condenser, an expansion valve and an evaporator.

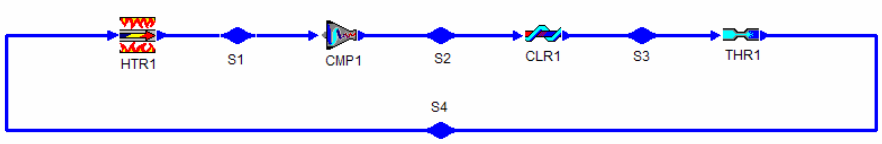

Figure 12.4.1. Basic vapor heat pump.

The T-s diagram of the basic vapor heat pump cycle which consists of the following four processes is shown in Figure 12.4.2:

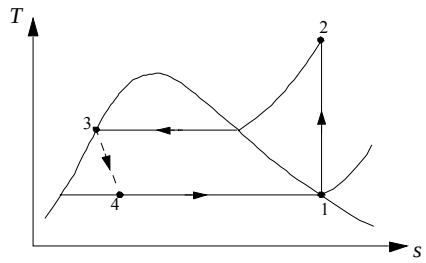

Figure 12.4.2. T-s diagram of the basic vapor heat pump cycle.

1-2	isentropic compression
2-3	isobaric cooling
3-4	throttling
4-1	isobaric heating

Applying the First law and Second law of thermodynamics of the open system to each of the four processes of the basic vapor heat pump yields:

$$Q_{12} = 0 \tag{12.4.1}$$

$$0 - W_{12} = m(h_2 - h_1) \tag{12.4.2}$$

$$W_{23} = 0 \tag{12.4.3}$$

$$Q_{23} - 0 = m(h_3 - h_2) \tag{12.4.4}$$

$$Q_{34} = 0 \text{ and } W_{34} = 0 \tag{12.4.5}$$

$$0 - 0 = m(h_3 - h_4) \tag{12.4.6}$$

$$W_{41} = 0 \tag{12.4.7}$$

and

$$Q_{41} - 0 = m(h_1 - h_4) \tag{12.4.8}$$

The desirable energy output of the basic vapor heat pump is the heat removed from the condenser (or heat added to the high temperature thermal reservoir). The energy input to the cycle is the compressor work required. Thus the coefficient of performance (COP) of the cycle is

$$\exists_{HP} = Q_{23} / W_{12} = (h_3 - h_2)/(h_2 - h_1) \tag{12.4.9}$$

The rate of the heat removed from the inner space of the heat pump is called heating load or heating capacity.

Example 12.4.1.

Determine the COP, horsepower required and heating load of a basic vapor heat pump cycle using R-134a as the working fluid in which the condenser pressure is 900 kPa and the evaporation pressure is 240 kPa. The circulation rate of fluid is 0.1 kg/s. Show the cycle on a T-s diagram. Plot the sensitivity diagram of COP vs condenser pressure.

To solve this problem by CyclePad, we take the following steps:

1. Build
   (A) Take a compressor, a condenser, a valve, and a heater (evaporator) from the open system inventory shop and connect the four devices to form the basic heat pump cycle.
   (B) Switch to analysis mode.
2. Analysis
   (A) Assume a process for each of the four devices: (a) compressor as isentropic, (b) condenser as isobaric, (c) valve as constant enthalpy, and (d) evaporator as isobaric.
   (B) Input the given information: (a) working fluid is R-134a, (b) the inlet pressure and quality of the compressor are 240 kPa and 1, (c) the inlet pressure and quality of the valve are 900 kPa and 0, and (d) the mass flow rate is 0.1kg/s.
3. Display results
   (A) Display the cycle properties results. The cycle is a heat pump. The answers are COP=6.28, heating load=-17.27 kW, and Net power input=-2.75 kW as shown in Figure E12.4.1a, and
   (B) Display the sensitivity diagram of cycle COP versus evaporation pressure as shown in Figure E12.4.1b.

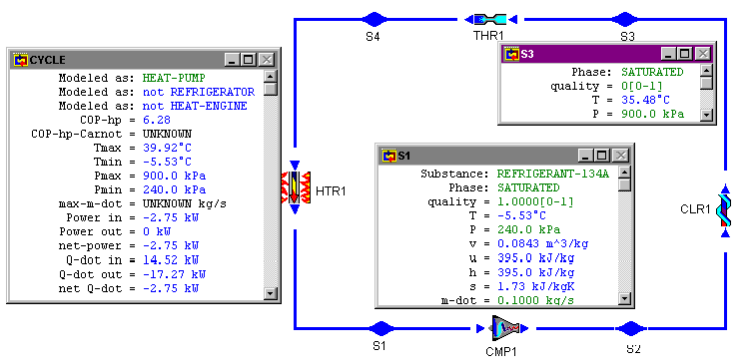

Figure E12.4.1a. Basic vapor heat pump cycle.

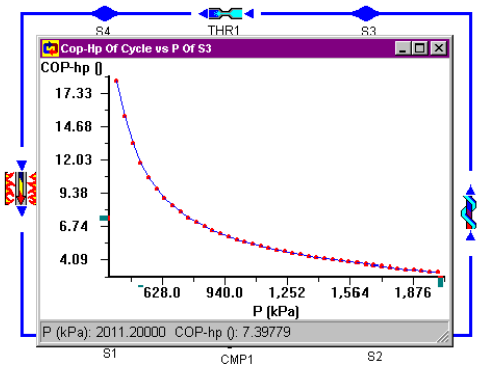

Figure E12.4.1b. Basic vapor heat pump cycle sensitivity analysis.

Homework 12.4. Heat Pump

1. Find the compressor power required, quality of the refrigerant at the end of the throttling process, heating load and COP for a heat pump that uses refrigerant-12 as the working fluid and is designed to operate at an evaporator saturation temperature of 10EC and a condenser saturation temperature of 40EC. The mass rate flow of refrigerant 12 is 0.22 kg/s.
   ANSWER: -2.99 kW, 0.1996, 28.76 kW, and 9.62.
2. Consider an ideal heat pump which uses refrigerant-12 as the working fluid. The saturation temperature of the refrigerant in the evaporator is 6EC and in the condenser it is 58EC. The refrigerant is circulated at the rate of 0.021 kg/s. Determine the compressor power required, quality of the refrigerant at the end of the throttling process, heating load and COP of the heat pump.
   ANSWER: -0.5064 kW, 0.3498,-2.53 kW, and 5.00.
3. An ideal heat pump uses ammonia as the working fluid. The saturation temperature of the refrigerant in the evaporator is 22EF and in the condenser it is 98EF. The refrigerant is circulated at the rate of 0.051 lbm/s. Determine the compressor power required, heating load and COP of the heat pump.
   ANSWER: -6.30 hp, 28.16 Btu/s, and 6.32.
4. Find the compressor power required, heating load and COP for a heat pump that uses refrigerant-12 as the working fluid and is designed to operate at an evaporator saturation temperature of 2EC and a condenser temperature of 39EC. The compressor efficiency is 78 percent. The mass rate flow of refrigerant 12 is 0.32 kg/s.
   ANSWER: -7 kW, 43.74 kW, and 6.25.
5. Find the compressor power required, turbine power produced, heating load and COP for a heat pump that uses refrigerant-12 as the working fluid and is designed to operate at an evaporator saturation temperature of 2EC and a condenser saturation temperature of 39EC. The mass rate flow of refrigerant 12 is 0.32 kg/s. The throttling valve is replaced by an adiabatic turbine with 74% efficiency.
   ANSWER: -5.46 kW, 0.8490 kW, 42.20 kW, and 9.15.

12.5. ACTUAL VAPOR HEAT PUMP CYCLE

The actual vapor heat pump cycle deviates from the ideal cycle primarily because of inefficiency of the compressor, pressure drops associated with fluid flow and heat transfer to or from the surroundings. The vapor entering the compressor must be superheated slightly rather than a saturated vapor. The refrigerant entering the throttling valve is usually compressed liquid rather than a saturated liquid.

Example 12.5.1.

Determine the COP, horsepower required and heating load of a basic vapor heat pump cycle using R-134a as the working fluid in which the condenser pressure is 900 kPa and the evaporation pressure is 240 kPa. The circulation rate of fluid is 0.1 kg/s. The compressor efficiency is 88%. Show the cycle on T-s diagram.

To solve this problem by CyclePad, we take the following steps:

1. Build
   (A) Take a compressor, a cooler (condenser), a valve, and a heater (evaporator) from the open system inventory shop and connect the four devices to form the basic heat pump cycle.
   (B) Switch to analysis mode.
2. Analysis
   (A) Assume a process for each of the four devices: (a) compressor as isentropic, (b) condenser as isobaric, (c) valve as constant enthalpy, and (d) evaporator as isobaric.
   (B) Input the given information: (a) working fluid is R-134a, (b) the inlet pressure and quality of the compressor are 240 kPa and 1, (c) the inlet pressure and quality of the valve are 900 kPa and 0, (d) the compressor efficiency is 88%. and (e) the mass flow rate is 0.1kg/s.
3. Display results

Display the cycle properties results. The cycle is a heat pump. The answers are COP=5.65, heating load=14.52 kW, and net power input=-3.12 kW.

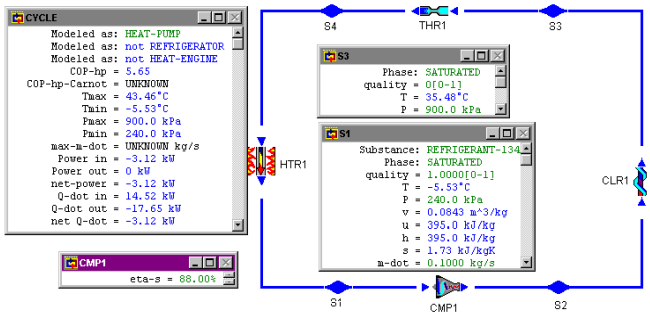

Figure E12.5.1. Basic vapor heat pump cycle.

Homework 12.5. Actual Vapor Heat Pump

1. Find the compressor power required, quality of the refrigerant at the end of the throttling process, heating load and COP for a heat pump that uses refrigerant-12 as the working fluid and is designed to operate at an evaporator saturation temperature of 10EC and a condenser saturation temperature of 40EC. The compressor efficiency is 68 percent. The mass rate flow of refrigerant 12 is 0.22 kg/s.
   ANSWER: -4.39 kW, 0.1996, -30.17 kW and 6.86.
2. Consider a heat pump which uses refrigerant-12 as the working fluid. The compressor efficiency is 80%. The saturation temperature of the refrigerant in the evaporator is 6EC and in the condenser it is 58EC. The refrigerant is circulated at the rate of 0.021 kg/s. Determine the compressor power required, quality of the refrigerant at the end of the throttling process, heating load and COP of the heat pump.
   ANSWER: -0.633 kW, 0.3498, -2.66 kW and 4.20.
3. A heat pump uses ammonia as the working fluid. The compressor efficiency is 80%. The saturation temperature of the refrigerant in the evaporator is 22EF and in the condenser it is 98EF. The refrigerant is circulated at the rate of 0.051 lbm/s. Determine the compressor power required, heating load and COP of the heat pump.
   ANSWER: -0.7614 hp, -3.04 Btu/s and 5.64.
4. Find the compressor power required, heating load and COP for a heat pump that uses refrigerant-12 as the working fluid and is designed to operate at an evaporator saturation temperature of 2EC and a condenser temperature of 39EC. The compressor efficiency is 78 percent. The mass rate flow of refrigerant 12 is 0.32 kg/s.
   ANSWER: -7.00 kW, -43.74 kW and 6.25.
5. Find the compressor power required, turbine power produced, heating load and COP for a heat pump that uses refrigerant-12 as the working fluid and is designed to operate at an evaporator temperature of 2EC and a condenser temperature of 39EC. The compressor efficiency is 78 percent. The mass rate flow of refrigerant 12 is 0.32 kg/s. The throttling valve is replaced by an adiabatic turbine with 74% efficiency.
   ANSWER: -7.00 kW, 0.6282 kW, -43.74 kW and 6.86.

6. Determine the COP, horsepower required and heating load of a basic vapor heat pump cycle using R-134a as the working fluid in which the condenser pressure is 900 kPa and the evaporator pressure is 240 kPa. The circulation rate of fluid is 0.1 kg/s. The compressor efficiency is 78%.
   ANSWER: 5.12, -3.53 kW and-18.05 kW.
7. R-134a enters the compressor of a refrigerator at 0.14 Mpa and -10EC at a rate of 0.1 kg/s and leaves at 0.7 Mpa and 50EC. The refrigerant is cooled in the condenser to 24EC and 0.65 Mpa. The refrigerant is throttled to 0.15 Mpa. Determine the compressor efficiency, power input to the compressor, cooling effect, and COP of the refrigerator.
   ANSWER: 82.19%, -4.28 kW, -20.0 kW, and 4.67.
8. R-134a enters the compressor of a refrigerator at 0.14 Mpa and -10EC at a rate of 0.1 kg/s and leaves at 0.7 Mpa. The compressor efficiency is 85%. The refrigerant is cooled in the condenser to 24EC and 0.65 Mpa. The refrigerant is throttled to 0.15 Mpa. Determine the power input to the compressor, cooling effect, and COP of the refrigerator.
   ANSWER: -4.14 kW,-20.23 kW, and 4.89.
9. R-134a enters the compressor of a refrigerator at 0.14 Mpa and -10EC at a rate of 0.1 kg/s and leaves at 0.8 Mpa. The compressor efficiency is 85%. The refrigerant is cooled in the condenser to 26EC and 0.75 Mpa. The refrigerant is throttled to 0.15 Mpa. Determine the power input to the compressor, cooling effect, and COP of the refrigerator.
   ANSWER: -4.50 kW, -20.27 kW, and 4.51.

12.6. WORKING FLUIDS FOR VAPOR REFRIGERATION AND HEAT PUMP SYSTEMS

Ammonia, carbon dioxide, and sulphur dioxide were used widely in early years of refrigeration in industrial refrigeration applications. For domestic and industrial applications now, the principal refrigerants have been man-made freons. This family of substances are known by an R number of the general form RN, R signifying refrigerant and the number N specifically identifying the chemical compound. The number allocated to the halogenated hydrocarbons (freons) are derived as follows: for refrigerants derived from methane (CH_4), N is a two digit integer. The first digit indicates the number of hydrogen atoms +1 and the second digit indicates the number of fluorine atoms, e.g., CCl_2F_2 is R12. For refrigerants derived from ethane (C_2H_6), N is a three digit integer. The first digit is always 1, the second digit is the number of hydrogen atoms +1 and the third digit is the number of fluorine atoms, e.g., $C_2Cl_2F_4$ is R114.

There are three R number refrigerants on the substance menu of CyclePad. The three refrigerants are R12, R22 and R134a.

The desirable properties of working fluids for vapor refrigeration and heat pump systems include high critical temperature and low pressure, low specific volume, inexpensive, non-flammable, non-explosive, non-toxic, non- corrosive, inert and stable, etc.

In recent years, the effects of freons on the ozone layer have been critically evaluated. Some freons such as R12 having leaked from refrigeration systems into the atmosphere, spend many years slowly diffusing upward into the stratosphere. There it is broken down, releasing chlorine which depletes the protective ozone layer surrounding the Earth's stratosphere. Ozone is a critical component of the atmospheric system both for climate control and for reducing solar radiation. It is therefore important to human beings to ban these freons such as the widely used but life threatening R12. New desirable refrigerants which contains no chlorine atoms are found to be suitable and acceptable replacements.

Homework 12.6. Working Fluids for Vapor Refrigeration and Heat Pump Systems

1. Why are ammonia, carbon dioxide, and sulphur dioxide no longer used in domestic refrigerators and heat pumps?
2. What devastating consequence result in our environment by refrigerants leaking out from refrigeration systems into the atmosphere?
3. List five desirable properties of working fluids for vapor refrigeration and heat pump systems.
4. What does the refrigerant number mean?

12.7. CASCADE AND MULTI-STAGED VAPOR REFRIGERATORS

There are several variations of the basic vapor refrigeration cycle. A cascade cycle is used when the temperature difference between the evaporator and the condenser is quite large. The multi-staged cycle is used to reduced the required compressor power input.

12.7.1. Cascade Vapor Refrigerators

There are applications when the temperature difference between the evaporator and the condenser is quite large. A single vapor refrigeration cycle usually can not be used to achieve the large difference. To solve this problem and still using vapor refrigeration cycles, a cascade vapor refrigeration cycle must be used. A cascade cycle is several vapor refrigeration cycles connecting in series. A cascade cycle made of three cycles in series is illustrated in Figure 12.7.1.1 The condenser of the lowest-temperature cycle (cycle A, 1-2-3-4-1) provides the heat input to the evaporator of the mid-temperature cycle (cycle B, 5-6-7-8-5); The condenser of the mid-temperature cycle (cycle B) provides the heat input to the evaporator of the highest-temperature cycle (cycle C, 9-10-11-12-9). Different working fluids may be used in each of the individual cycle.

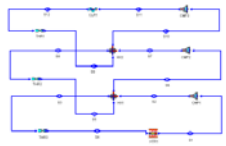

Figure 12.7.1.1. Cascade vapor refrigerator.

Neglecting kinetic and potential energy changes, a steady state and steady flow mass and energy balance on the components of the cascade vapor refrigeration cycle have the general forms

$$3mdot_e = 3mdot_i \tag{12.7.1.1}$$

and

$$Qdot\text{-}Wdot=3mdot_e h_e - 3mdot_i h_i \tag{12.7.1.2}$$

The cooling load of the cascade vapor refrigeration cycle is the rate of heat added in the evaporator of the lowest temperature cycle. The power added to the cycle and is the sum of the power added to the indiviual compressors

$$Wdot=3Wdot_{compressor} \tag{12.7.1.3}$$

and the COP of the cycle is

$$\exists=Qdot_{lowest\ T\ evaporator}\ /Wdot \tag{12.7.1.4}$$

The following examples illustrate the analysis of the cascade vapor refrigeration cycle.

Example 12.7.1.1.

A cascade vapor refrigeration cycle made of two separate vapor refrigeration cycles has the following information:

Topping cycle: working fluid=R134a, p_5=200 kPa, x_5=1, p_7=500 kPa, and x_7=0.
Bottoming cycle: working fluid=R134a, p_1=85 kPa, $mdot_1$=1 kg/s, x_1=1, p_3=250 kPa, and x_3=0.

Determine the mass rate flow of the topping cycle, power required by compressor #1, power required by compressor #2, total power required by the compressors, rate of heat added in the evaporator, cooling load, and COP of the cascade vapor refrigeration cycle.

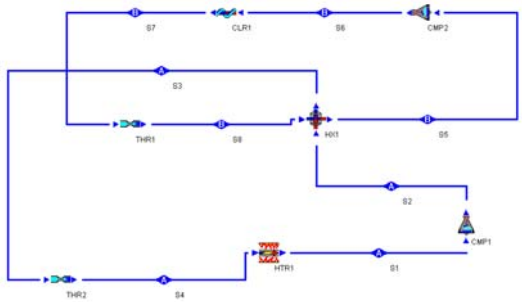

Figure E12.7.1.1a. Cascade refrigerator.

To solve the problem by CyclePad, we do the following steps:

1. Build the cycle as shown in Figure E12.7.1.1a.
2. Assume compressors are adiabatic with 100% efficiency, heater and cooler be isobaric, and both hot-side and cold-side of the heat exchanger are isobaric.
3. Input working fluid is R134a at state 1, p_1=85 kPa, $mdot_1$=1 kg/s, x_1=1, p_3=250 kPa, and x_3=0; working fluid is R134a at state 5, p_5=200 kPa, x_5=1, p_7=500 kPa, and x_7=0.
4. Display the cycle property results: $mdot_5$=1.21 kg/s, COP=4.17, power input by compressor 1=-21.64 kW, power input by compressor 2=-22.87 kW, power input by compressors =-44.5 kW, rate of heat removed by the condenser=-230.2 kW, rate of heat added to the evaporator=185.7 kW, cooling load=52.81 ton, and COP=4.17.

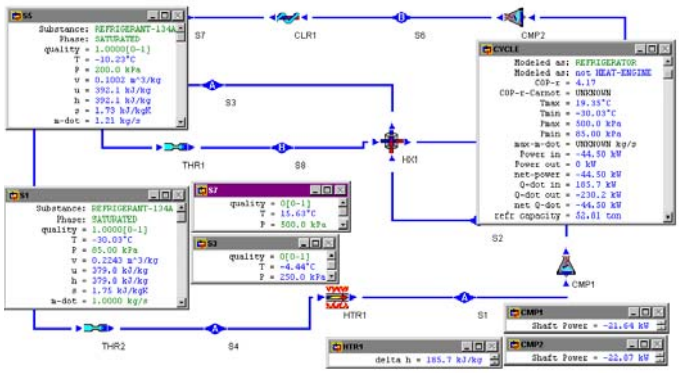

Figure E12.7.1.1b. Cascade refrigerator.

Homework 12.7.1. Cascade Vapor Refrigerators

1. What is the purpose of Cascade vapor refrigerators?
2. A cascade vapor refrigeration cycle made of two separate vapor refrigeration cycles as shown in Figure E12.7.1.1a has the following information:

   Topping cycle: working fluid=R12, p_5=200 kPa, x_5=1, p_7=500 kPa, and x_7=0.

   Bottoming cycle: working fluid=R12, p_1=85 kPa, $mdot_1$=1 kg/s, x_1=1, p_3=250 kPa, and x_3=0.

Determine the total power required by the compressors, rate of heat added in the evaporator, cooling load, and COP of the cascade vapor refrigeration cycle.

ANSWER: -44.5 kW, -179.9 kW, 142.2 kW, 40.42 ton, and 3.77.

3. A cascade vapor refrigeration cycle made of two separate vapor refrigeration cycles as shown in Figure E12.7.1.1a has the following information:

   Topping cycle: working fluid=ammonia, p_5=200 kPa, x_5=1, p_7=500 kPa, and x_7=0.

   Bottoming cycle: working fluid=ammonia, p_1=85 kPa, $mdot_1$=1 kg/s, x_1=1, p_3=250 kPa, and x_3=0.

   Determine total power required by the compressors, rate of heat added in the evaporator, cooling load, and COP of the cascade vapor refrigeration cycle.

   ANSWER: -279.7 kW, 1276 kW, 362.9 ton, and 4.56.

12.7.2. Multi-Staged Vapor Refrigerators

A flash chamber may have better heat transfer characteristics than the heat exchanger employed between the upstream cycle and down-stream cycle of the cascaded cycle. It is therefore used to replace the heat exchanger in *multi-staged vapor refrigerators*. In this arrangement, the working fluid flowing throughout the whole system must be the same.

A schematic diagram of a two-stage vapor refrigerator is shown in Figure 12.7.2.1. The liquid leaving the condenser is throttling into a flashing chamber (separator use to separate mixture to vapor and liquid) maintained at a pressure between the evaporator pressure and condenser pressure. Saturated vapor separated from the liquid in the flashing chamber enters a mixing chamber, where it mixes with the vapor leaving the low-pressure compressor at state 2. The saturated liquid is throttled to the evaporator pressure at state 9. By adjusting the mass flow rate flowing in the separator, the cooling load of the refrigeration cycle can be controlled. The cycle analysis of the cycle is illustrated in Example 12.7.2.1.

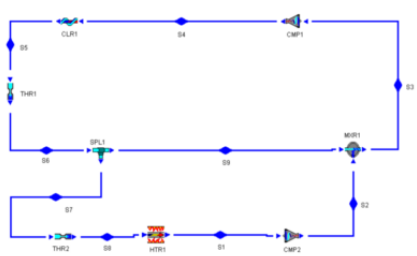

Figure 12.7.2.1. Multi-stage vapor refrigerator.

Neglect kinetic and potential energy changes. A steady state and steady flow mass and energy balance on the components of the cascade vapor refrigeration cycle have the general forms

$$3mdot_e = 3mdot_i \tag{12.7.2.1}$$

and

$$Qdot-Wdot=3mdot_e h_e - 3mdot_i h_i \quad (12.7.2.2)$$

The cooling load of the cascade vapor refrigeration cycle is the rate of heat added in the evaporator of the lowest temperature cycle. The power added to the cycle and is the sum of the power added to the indiviual compressors

$$Wdot=3Wdot_{compressor} \quad (12.7.2.3)$$

and the COP of the cycle is

$$\exists=Qdot_{lowest\ T\ evaporator}/Wdot \quad (12.7.2.4)$$

The following examples illustrate the analysis of the cascade vapor refrigeration cycle.

Example 12.7.2.1.

A two-stage vapor refrigeration cycle as shown in Figure 12.7.2.1 has the following information:

working fluid=R134a, p_1=85 kPa, x_1=0, p_2=200 kPa, p_4=500 kPa, m_4=1 kg/s, m_7=0.8 kg/s, and x_5=0.

Determine the power required by compressor #1, power required by compressor #2, total power required by the compressors, rate of heat added in the evaporator, cooling load, and COP of the cycle. Plot the cooling load vs m_7 sensitivity diagram.

To solve the problem by CyclePad, we do the following steps:

1. Build the cycle as shown in Figure 12.7.2.1a.
2. Assume compressors are adiabatic with 100% efficiency, heater and cooler be isobaric, and both hot-side and cold-side of the heat exchanger are isobaric.
3. Input working fluid is R134a at state 1, p_1=85 kPa, x_1=0, p_2=200 kPa, p_4=500 kPa, m_4=1 kg/s, m_7=0.8 kg/s, and x_5=0.
4. (A) Display the cycle property results: COP=4.84, power input by compressor 1=-18.35 kW, power input by compressor 2=-13.58 kW, power input by compressors =-31.93 kW, rate of heat removed by the condenser=-186.6 kW, rate of heat added to the evaporator=154.7 kW, and cooling load=43.99 ton. (B) Display the sensitivity diagram as shown in Figure E12.7.2.1b.

An arrangement of either a cascaded or multi-staged refrigerator can be made as illustrated in Figure 12.7.2.2. In this arrangement, the system can be either a cascaded refrigerator or a multi-staged refrigerator.

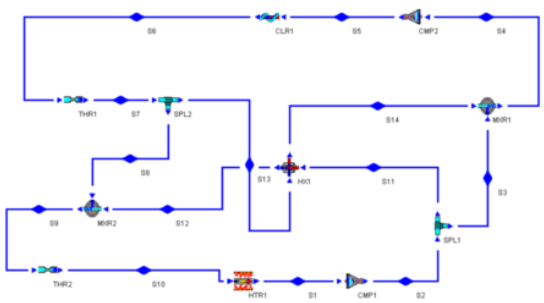

Figure 12.7.2.2. Cascaded or multi-staged refrigerator.

Suppose $mdot_3$=0 and $mdot_8$=0, the working fluids of the top and that of the bottom cycle do not mix. Therefore, it is a cascaded refrigerator.

Suppose $mdot_3$=1, the working fluids of the top and that of the bottom cycle do mix. It becomes a multi-staged refrigerator.

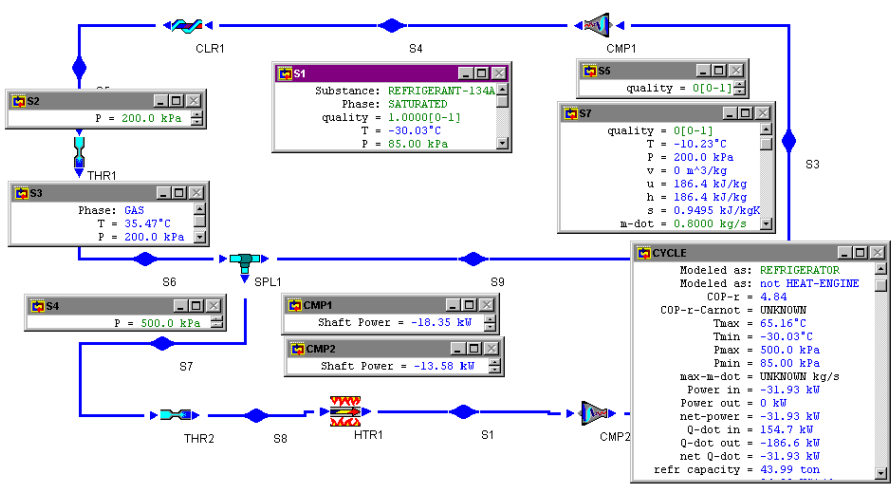

Figure E12.7.2.1a. Two-stage vapor refrigerator.

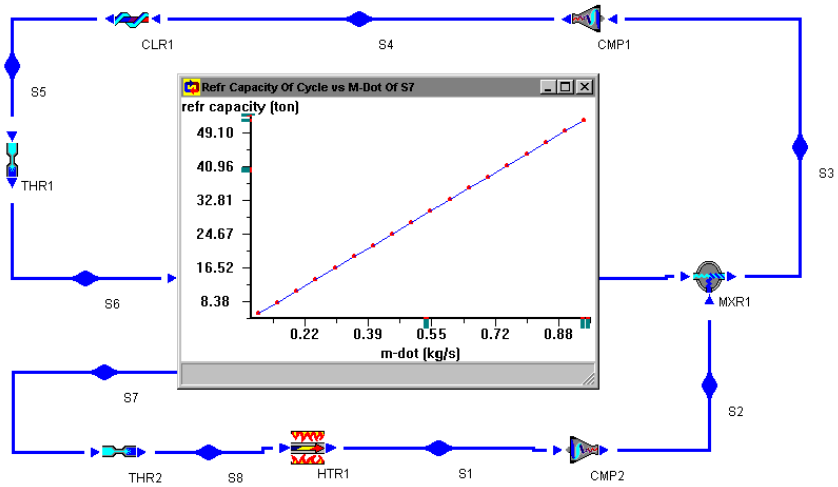

Figure E12.7.2.1b. Two-stage vapor refrigerator cooling load sensitivity analysis.

Example 12.7.2.2 illustrates the system as a multi-staged refrigerator if $mdot_3$=1.

Example 12.7.2.2.

A cycle as shown in Figure 12.7.2.2 has the following information:

working fluid=R134a, p_1=85 kPa, x_1=0, p_2=200 kPa, p_5=500 kPa, m_4=1 kg/s, m_{11}=0 kg/s, x_6=0, x_8=0 and x_{13}=1.

Determine the power required by compressor #1, power required by compressor #2, total power required by the compressors, rate of heat added in the evaporator, cooling load, and COP of the cycle.

To solve the problem by CyclePad, we do the following steps:

1. Build the cycle as shown in Figure 12.7.2.2.
2. Assume compressors are adiabatic with 100% efficiency, heater and cooler be isobaric, and both hot-side and cold-side of the heat exchanger are isobaric.
3. Input working fluid is R134a at state 1, p_1=85 kPa, x_1=0, p_2=200 kPa, p_5=500 kPa, m_4=1 kg/s, m_{11}=0 kg/s, x_6=0, x_8=0 and x_{13}=1.
4. Display the cycle property results: COP=4.81, power input by compressor 1=-33.37 kW, rate of heat removed by the condenser=-193.9 kW, rate of heat added to the evaporator=160.5 kW, and cooling load=45.64 ton.

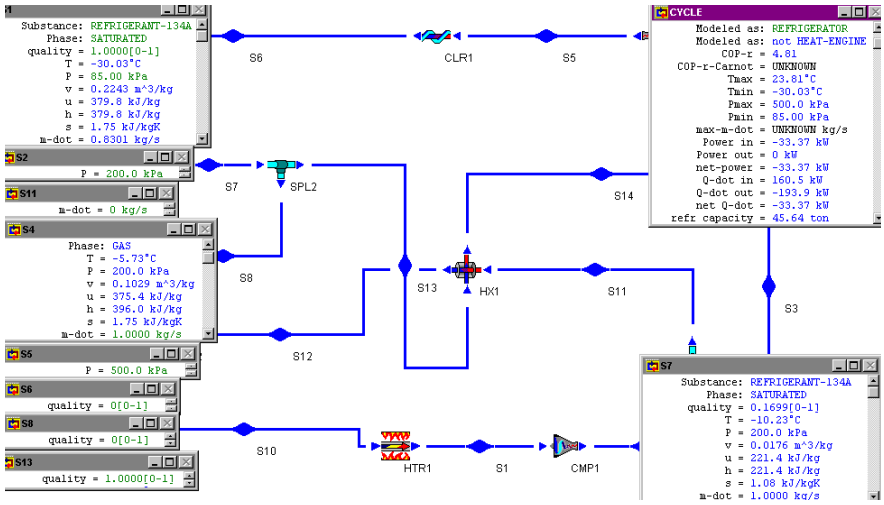

Figure E12.7.2.2. Cascaded or multi-staged refrigerator.

Homework 12.7.2. Multi-Stage Vapor Refrigerators

1. What is the purpose of multi-staged vapor refrigerators?
2. What is the difference between cascaded and multi-staged vapor refrigerators?
3. A two-stage vapor refrigeration cycle as shown in Figure 10.6.2.1 has the following information:
   working fluid=R22, p_1=85 kPa, x_1=0, p_2=200 kPa, p_4=500 kPa, m_4=1 kg/s, m_7=0.8 kg/s, and x_5=0.
   Determine the power required by compressor #1, power required by compressor #2, total power required by the compressors, rate of heat added in the evaporator, cooling load, and COP of the cycle.
   ANSWER: -38.12 kW, -210.2 kW, 172.1 kW, 48.92 ton, and 4.51.
4. A two-stage vapor refrigeration cycle as shown in Figure 10.6.2.1 has the following information:
   working fluid=ammonia, p_1=85 kPa, x_1=0, p_2=200 kPa, p_4=500 kPa, m_4=1 kg/s, m_7=0.8 kg/s, and x_5=0.
   Determine the power required by compressor #1, power required by compressor #2, total power required by the compressors, rate of heat added in the evaporator, cooling load, and COP of the cycle.

ANSWER: -217.5 kW, -1257 kW, 1040 kW, 295.6 ton, and 4.78.

5. A two-stage vapor refrigeration cycle as shown in Figure 10.6.2.1 has the following information:
   working fluid=R134a, p_1=85 kPa, x_1=0, p_2=200 kPa, p_4=500 kPa, m_4=1 kg/s, m_7=0.9 kg/s, and x_5=0.
   Determine the power required by compressor #1, power required by compressor #2, total power required by the compressors, rate of heat added in the evaporator, cooling load, and COP of the cycle.

ANSWER: -35.92 kW, -209.9 kW, 174.0 kW, 49.49 ton, and 4.84.

12.8. DOMESTIC REFRIGERATOR-FREEZER SYSTEM, AND AIR CONDITIONING-HEAT PUMP SYSTEM

12.8.1. Domestic Refrigerator-Freezer System

The household refrigerator-freezer combination uses one evaporator (heater) in the freezer section to keep that region at the desired temperature (-18EC or 0EF). Cold air from the freezer is transferred into the refrigerator section to keep it at a higher temperature (2EC or 35EF). The COP of the refrigerator-freezer combination suffers because the COP of the combination is equal to the COP of the freezer. It is known that the COP of a refrigeration cycle is inversely proportional to (T_H -T_L). The lower the T_L, the lower the COP.

One method of improving the COP of the refrigerator-freezer combination is to employ an evaporator for both the refrigerator region and the freezer region with a single compressor as illustrated in Figure 12.8.1.1. A numerical example of this arrangement is shown in the following example.

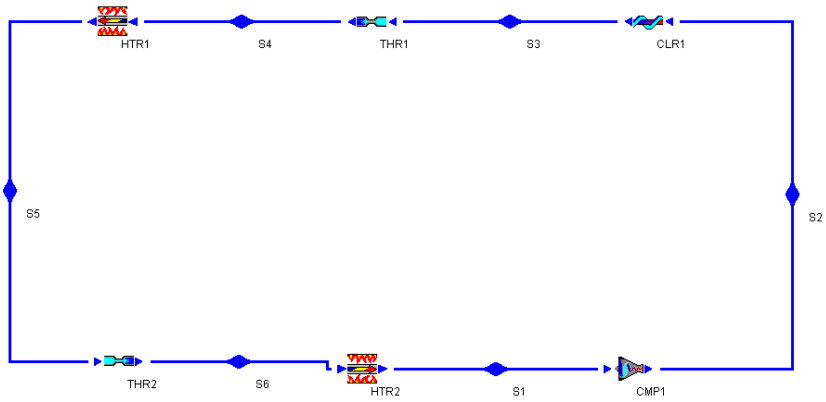

Figure 12.8.1.1. Refrigerator and freezer with dual evaporator.

Example 12.8.1.1.

A two-region-section refrigerator requires refrigeration at -37EC and -19EC. Using ammonia as the refrigerant, design a dual evaporator refrigerator. The quality of ammonia is 0.4 at the exit of the mid-temperature heater. Find the COP, compressor input power, and cooling load of the refrigerator based on one unit mass flow rate of refrigerant.

To design the refrigerator by CyclePad, we do the following :

(A) Built the two-region-section refrigerator as shown in Figure 12.8.1.1,
(B) Assume the compressor is adiabatic and 100% efficient, and cooler and heaters are isobaric,

(C) Let working fluid be ammonia, T_1=-37EC, x_1=1, mdot =1 kg/s, p_2=800 kPa, x_3=0, T_4=-19EC, and x_6=0.4, and

(D) Display cycle property results. The results are: COP=3.39, $Qdot_{htr\#1}$=301.3 kW, $Qdot_{htr\#2}$=828.2 kW, compressor input power=-333.4 kW, and cooling load=321.2 ton.

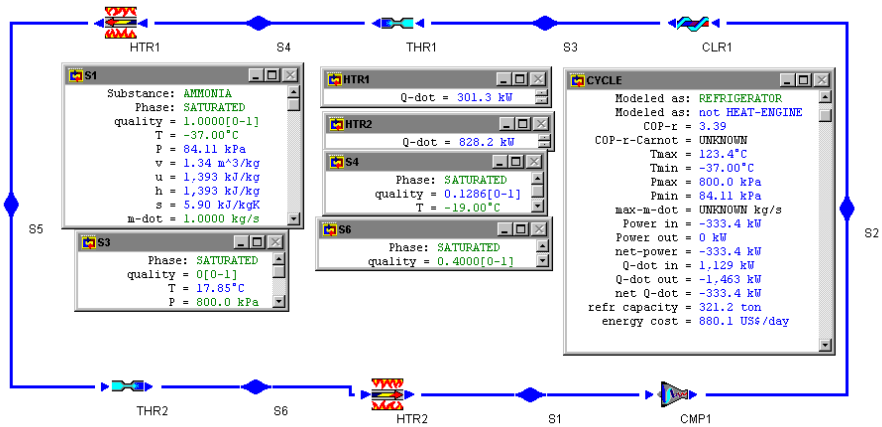

Figure E12.8.1.1. Refrigerator and freezer with dual evaporator.

Homework 12.8.1. Refrigerator and Freezer with Dual Evaporator

1. What is the purpose of the Refrigerator and freezer with dual evaporator?
2. A two-region-section refrigerator requires refrigeration at -17EC and 2EC. Using ammonia as the refrigerant, design a dual evaporator refrigerator. The quality of ammonia is 0.4 at the exit of the mid-temperature heater. Find the rate of heat added to the low-temperature heater, rate of heat added to the high-temperature heater, compressor input power, power output, total rate of heat added, total rate of heat removed, cooling load of the refrigerator, and COPof the cycle based on one unit mass flow rate of refrigerant.
   ANSWER: 791.6 kW, 336.3 kW, -182 kW, 0, 1158 kW, -1340 kW, 329.3 ton, 6.36.
3. A two-region-section refrigerator requires refrigeration at -17EC and 2EC. Using R-12 as the refrigerant, design a dual evaporator refrigerator. The quality of R-12 is 0.4 at the exit of the mid-temperature heater. Find the rate of heat added to the low-temperature heater, rate of heat added to the high-temperature heater, compressor input power, power output, total rate of heat added, total rate of heat removed, cooling load of the refrigerator, and COP of the cycle based on one unit mass flow rate of refrigerant.
   ANSWER: 95.73 kW, 17.05 kW, -27.42 kW, 0, 112.8 kW, -140.2 kW, 32.07 ton, 4.11.
4. A two-region-section refrigerator requires refrigeration at -20EC and 0EC. Using R-22 as the refrigerant, design a dual evaporator refrigerator. The quality of R-22 is 0.4

at the exit of the mid-temperature heater. Find the rate of heat added to the low-temperature heater, rate of heat added to the high-temperature heater, compressor input power, power output, total rate of heat added, total rate of heat removed, cooling load of the refrigerator, and COP of the cycle based on one unit mass flow rate of refrigerant.
ANSWER: 130.9 kW, 49.3 kW, -26.31 kW, 0, 180.2 kW, -260.5 kW, 51.25 ton, 6.85.

5. A two-region-section refrigerator requires refrigeration at -20EC and 0EC. Using ammonia as the refrigerant, design a dual evaporator refrigerator. The quality of ammonia is 0.4 at the exit of the mid-temperature heater. Find the rate of heat added to the low-temperature heater, rate of heat added to the high-temperature heater, compressor input power, power output, total rate of heat added, total rate of heat removed, cooling load of the refrigerator, and COP of the cycle based on one unit mass flow rate of refrigerant.
ANSWER: 797.4 kW, 356.6 kW, -201.9 kW, 0, 1154 kW, -1356 kW, 328.1 ton, 5.71.
6. A three-region-section refrigerator requires refrigeration at -30EC, -20EC and -10EC. Using ammonia as the refrigerant, design a dual evaporator refrigerator. The quality of ammonia is 0.2 at the exit of the high-temperature heater. The quality of ammonia is 0.4 at the exit of the mid-temperature heater. Find the rate of heat added to the low-temperature heater, rate of heat added to the mid-temperature heater, rate of heat added to the high-temperature heater, compressor input power, power output, total rate of heat added, total rate of heat removed, and COP of the cycle based on one unit mass flow rate of refrigerant.
ANSWER: 650.5.4 kW, 1224 kW, 359.9 kW, -171.5 kW, 0, 1224 kW, -1395 kW, 7.13.
7. A three-region-section refrigerator requires refrigeration at -30EC, -16EC and -10EC. Using ammonia as the refrigerant, design a dual evaporator refrigerator. The quality of ammonia is 0.2 at the exit of the high-temperature heater. The quality of ammonia is 0.4 at the exit of the mid-temperature heater. Find the rate of heat added to the low-temperature heater, rate of heat added to the mid-temperature heater, rate of heat added to the high-temperature heater, compressor input power, power output, total rate of heat added, total rate of heat removed, and COP of the cycle based on one unit mass flow rate of refrigerant.
ANSWER: 96.06 kW, 27.83 kW, 55.9 kW, -24.97 kW, 0, 179.8 kW, -204.8 kW, 7.20.
8. A three-region-section refrigerator requires refrigeration at -30EC, -16EC and -10EC. Using R-22 as the refrigerant, design a dual evaporator refrigerator. The quality of R-22 is 0.2 at the exit of the high-temperature heater. The quality of R-22 is 0.4 at the exit of the mid-temperature heater. Find the rate of heat added to the low-temperature heater, rate of heat added to the mid-temperature heater, rate of heat added to the high-temperature heater, compressor input power, power output, total rate of heat added, total rate of heat removed, and COP of the cycle based on one unit mass flow rate of refrigerant.

ANSWER: 105.8 kW, 31.05 kW, 56.25 kW, -26.78 kW, 0, 193.1 kW, -219.9 kW, 7.21.

9. A three-region-section refrigerator requires refrigeration at -30EC, -16EC and -10EC. Using R-134a as the refrigerant, design a dual evaporator refrigerator. The quality of R-134a is 0.2 at the exit of the high-temperature heater. The quality of R-134a is 0.4 at the exit of the mid-temperature heater. Find the rate of heat added to the low-temperature heater, rate of heat added to the mid-temperature heater, rate of heat added to the high-temperature heater, compressor input power, power output, total rate of heat added, total rate of heat removed, and COP of the cycle based on one unit mass flow rate of refrigerant.
   ANSWER: 99.89 kW, 27.83 kW, 52.08 kW, -24.97 kW, 0, 179.8 kW, -204.8 kW, 7.20.
10. A three-region-section refrigerator requires refrigeration at -30EC, -16EC and -10EC. Using R-12 as the refrigerant, design a dual evaporator refrigerator. The quality of R-12 is 0.2 at the exit of the high-temperature heater. The quality of R-12 is 0.4 at the exit of the mid-temperature heater. Find the rate of heat added to the low-temperature heater, rate of heat added to the mid-temperature heater, rate of heat added to the high-temperature heater, compressor input power, power output, total rate of heat added, total rate of heat removed, and COP of the cycle based on one unit mass flow rate of refrigerant.
   ANSWER: 75.92 kW, 22.08 kW, 40.15 kW, -18.97 kW, 0, 138.2 kW, -157.1 kW, 7.28.

12.8.2. Domestic Air Conditioning-Heat Pump System

Refrigerators and heat pumps have the same energy flow diagram and have the same components. A domestic air conditioning and heat pump system as shown in Figure 12.8.2.1 can therefore be used as a heat pump in the winter as well as an air conditioning unit in the summer. Notice that both the domestic air conditioning and heat pump system share the same equipments. Thus the investment in the heat pump can also be used for air conditioning to provide year-round house comfort control.

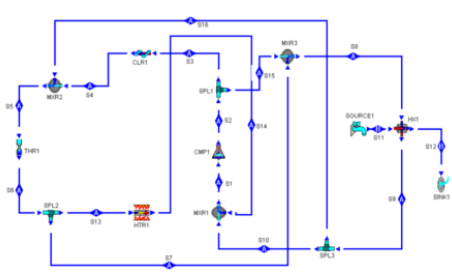

Figure 12.8.2.1. Domestic air conditioning and heat pump system.

In the air conditioning mode, the cycle (cycle A) is 1-2-3-4-5-6-7-8-9-10-1. The heat exchanger removes heat from the building replaces the evaporator. Atmospheric hot air

entering the dwelling at state 11 of cycle B is cooled by the heat exchanger by removing heat from the building to vaporize the refrigerant and leaving the dwelling at state 12 of cycle B.

In the heat pump mode, the cycle (cycle A) is 1-2-15-8-9-16-5-6-13-14-1. The heat exchanger adds heat to the building replacing the condenser. Atmospheric cold air entering the dwelling at state 11 of cycle B is heated by the heat exchanger by discharging heat to the building to condense the refrigerant and leaving the dwelling at state 12 of cycle B.

Notice that the heat exchanger is an evaporator in the air conditioning mode, and a condenser In the heat pump mode. Therefore, the refrigerant is on the hot-side in the heat pump mode, and on the cold-side in the air conditioning mode when the system is build using CyclePad.

Example 12.8.2.1.

In the air conditioning mode, a domestic air conditioning and heat pump system as shown in Figure 12.8.2.1 uses R-134a as the refrigerant. The refrigerant saturated vapor is compressed from 140 kPa to 700 kPa. Summer ambient air at 30EC is to be cooled down to 17EC. Find the compressor power required, heat removed from the ambient air in the heat exchanger, COP of the system, and mass rate of air flow per unit of mass rate of refrigerant flow.

To solve this problem by CyclePad, we do the following :

(A) Built the system as shown in Figure 12.8.2.1,
(B) Assume the compressor is adiabatic and 100% efficient, and cooler and heaters are isobaric,
(C) Let working fluid be R-134a, p_1=140 kPa, x_1=1, mdot =1 kg/s, p_2=700 kPa, x_3=0, T_{11}=30EC, T_{12}=17EC, $mdot_{13}$=0, $mdot_{15}$=0, and $mdot_{16}$=0,
(D) Display results. The results are: compressor input power=-33.46 kW, $Qdot_{HX1}$=-149.8 kW, and $mdot_{11}$=11.49 kg/s, and (E) the COP of the system is $Qdot_{HX1}$/compressor input power=149.8/33.46=4.477.

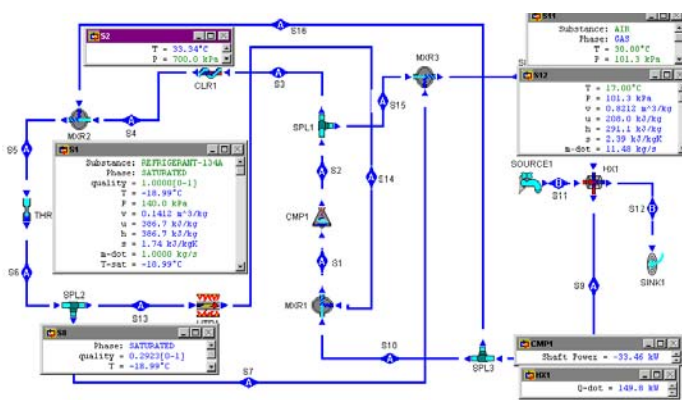

Figure E12.8.2.1. Domestic air conditioning system.

12.9. ABSORPTION AIR-CONDITIONING

The *absorption air-conditioning or refrigeration system* shown in Figure 12.9.1 is a system in which heat instead of work is employed to produce a refrigeration effect. In a conventional refrigeration system, high-quality and expensive electric work is consumed by the compressor which compresses vapor from a low pressure to a high pressure. Since pumping involves only a liquid, the pump consumes very little electric work. Therefore, the compressor of the basic vapor refrigeration cycle is replaced by a refrigerant generator (heater), an absorber (mixing chamber), a separator (splitter), a valve, and a liquid pump in the absorption air-conditioning system. The major energy input to the absorption system is heat added to the refrigerant generator, which generates refrigerant.

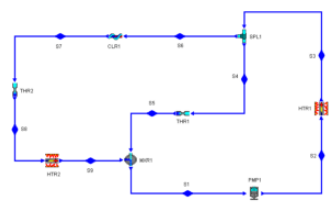

Figure 12.9.1. Absorption air-conditioning.

To illustrate the operation of the absorption air-conditioning or refrigeration system, consider the working fluids employed to be ammonia-water. Ammonia is the refrigerant and water the absorber in the absorption air-conditioning or refrigeration system shown in Figure 12.9.1. The vaporized ammonia refrigerant leaving the evaporator at state 9 is absorbed by the weak absorber solution at state 5 and is accompanied by a release of heat. The absorbent solution with a high concentration of refrigerant at state 1 is pumped to an upper pressure at state 2 corresponding to that of the condenser system. The heat input to the refrigerant generator from state 2 to state 3 boils off the refrigerant to state 6, leaving a weak absorber solution at state 4. The vaporized refrigerant that enters the condenser at state 6, the expansion valve at state 7, and then the evaporator at state 9 completes the refrigeration cycle as in the basic vapor refrigeration cycle. The most commonly used working fluid combinations in the absorption air-conditioning or refrigeration systems is water and lithium bromide, where water is the refrigerant and lithium bromide is the absorber.

Neglect kinetic and potential energy changes. A steady state and steady flow mass and energy balance on the components of the cycle have the general forms

$$3mdot_e = 3mdot_i \tag{12.9.1}$$

and

$$Qdot\text{-}Wdot=3mdot_e h_e - 3mdot_i h_i \tag{12.9.2}$$

The cooling load of the cycle is the rate of heat added in the evaporator (heater between state 8 and 9). The rate of energy added to the cycle and is the sum of the pump power and the

rate of heat added in the generator (heater between state 2 and 3). Since the pump requires very little power (neglect pump power), the rate of energy added to the cycle is the rate of heat added in the generator

$$Qdot_{in}=Qdot_{23} \tag{12.9.3}$$

and the COP of the cycle is

$$=Qdot_{89} /Qdot_{23} \tag{12.9.4}$$

The absorption cycle efficiency can be improved by adding a heat exchanger between the generator and the absorber as a regenerator as shown in Figure 12.9.2.

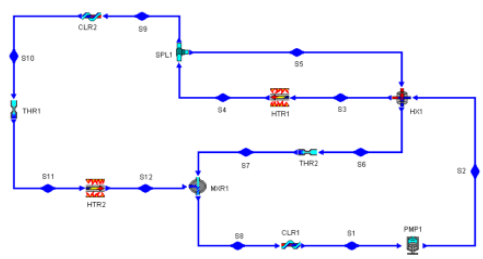

Figure 12.9.2. Absorption air-conditioning with regenerator.

Homework 12.9. Absorption Air-Conditioning

1. What is absorption refrigeration?
2. How does an absorption refrigeration system differ from a vapor compression refrigeration system?
3. What are the advantages of absorption refrigeration?

12.10. Brayton Gas Refrigeration Cycle

The *basic gas Brayton refrigeration cycle* is the reversed Brayton gas power cycle. The components of the basic gas refrigeration cycle include a compressor, a cooler, a turbine, and a heater as shown in Figure 12.10.1.

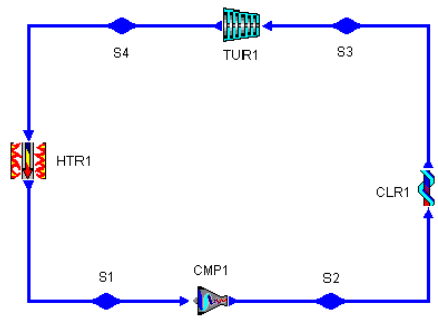

Figure 12.10.1. Basic Brayton refrigeration cycle.

The T-s diagram of the basic gas Brayton refrigeration cycle which consists of the following four processes is shown in Figure 12.10.2:

1-2	isentropic compression
2-3	isobaric cooling
3-4	isentropic expansion
4-1	isobaric heating

Applying the First law and Second law of thermodynamics of the open system to each of the four processes of the basic gas refrigeration yields:

$$Q_{12} = 0 \tag{12.10.1}$$

$$0 - W_{12} = m(h_2 - h_1) \tag{12.10.2}$$

$$W_{23} = 0 \tag{12.10.3}$$

$$Q_{23} - 0 = m(h_3 - h_2) \tag{12.10.4}$$

$$Q_{34} = 0 \tag{12.10.5}$$

$$0 - W_{34} = m(h_3 - h_4) \tag{12.10.6}$$

$$W_{41} = 0 \tag{12.10.7}$$

and

$$Q_{41} - 0 = m(h_1 - h_4) \tag{12.10.8}$$

The net work (W_{net}) added to the cycle is the sum of the compressor work (W_{12}) and the turbine work (W_{34})

$$W_{net} = W_{12} + W_{34} \tag{12.10.9}$$

The desirable energy output of the basic gas refrigeration cycle is the heat added to the heater (or heat removed from the inner space of the refrigerator). The energy input to the cycle is the net work required. Thus the coefficient of performance (COP) of the cycle is

$$\exists_R = Q_{41} / W_{net} = (h_4 - h_1)/[(h_1 - h_2) + (h_4 - h_3)] \quad (12.10.10)$$

Assuming gas has constant specific heats, Equation (6.10.10) can be simplified to

$$\exists_R = 1/\{[r_p]^{(k-1)/k} - 1\} \quad (12.10.11)$$

where $r_p = p_2/p_1 = p_3/p_4$ is the pressure ratio.

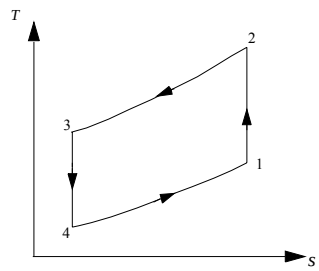

Figure 12.10.2. T-s diagram of the basic Brayton refrigeration cycle.

The basic gas Brayton refrigeration cycle analysis is given by Example 12.10.1.

Example 12.10.1.

Consider the design of an ideal air refrigeration cycle according to the following specifications:

Pressure of air at compressor inlet=15 psia
Pressure of air at turbine inlet=60 psia,
Temperature of air at compressor inlet=20EF
Temperature of air at turbine inlet=80EF
Mass rate of air flow=0.1 lbm/s

Determine the COP, the compressor horsepower required, turbine power produced, net power required, and cooling load for the cycle.

To solve this problem by CyclePad, we take the following steps:

1. Build
   (A) Take a compressor, a cooler, a turbine, and a heater from the open system inventory sho and connect the four devices to form the gas refrigeration cycle.

(B) Switch to analysis mode.

2. Analysis
   (A) Assume a process for each of the four devices: (a) compressor as isentropic, (b) cooler as isobaric, (c) turbine as isentropic, and (d) heater as isobaric.
   (B) Input the given information: (a) working fluid is air, (b) the inlet temperature and pressure of the compressor are 20EF and 15psia, (c) the inlet temperature and pressure of the turbine are 80EF and 60 psia,and (d) the mass flow rate is 0.1 lbm/s.
3. Display results
   (A) Display the cycle properties results. The cycle is a refrigerator. The answers as shown in Figure E12.10.1a are COP=2.06, compressor horsepower required=-7.90 hp, turbine power produced=5.98 hp, , net power required=-1.92 hp, cooling load=2.79 Btu/s=0.8377 ton, and net power input=-7.90 hp, and
   (B) Display the sensitivity diagram of cycle COP versus compression pressure ratio (Figure Example 12.10.1b).

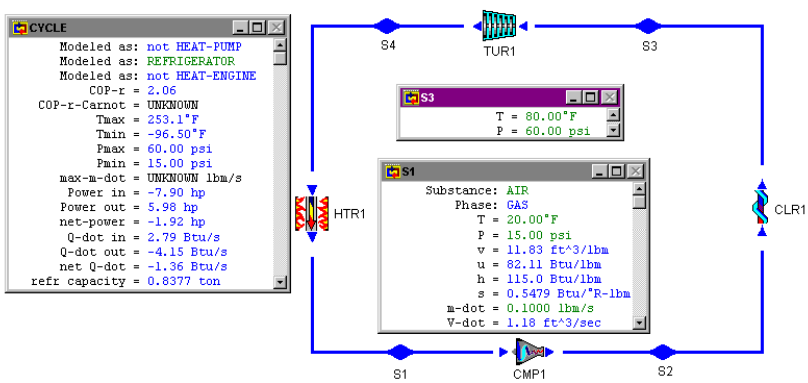

Figure E12.10.1a. Ideal gas refrigeration cycle.

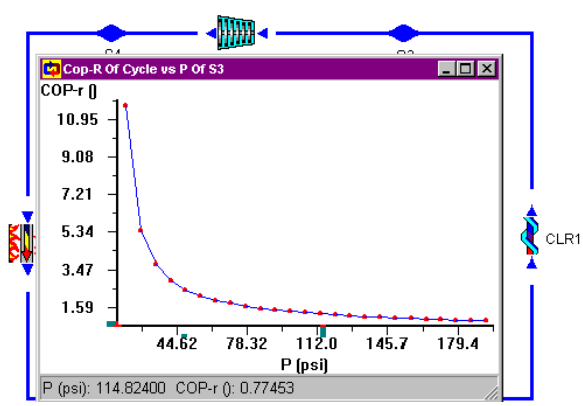

Figure E12.10.1b. Ideal gas refrigeration cycle sensitivity analysis.

COMMENT: The sensitivity diagram of cycle COP versus compression ratio indicates that the COP is increased as the compression pressure ratio is decreased. Unfortunately, the volume of the gas also increases when the compression pressure ratio decreases. Thus this type of air refrigeration cycle is very bulky when the compression pressure ratio is too low.

Example 12.10.2.

The refrigeration cycle shown at the left in Figure E12.10.2a is proposed to replace the more conventional cycle at the right. The compressor of the conventional system is isentropic. The low-pressure compressor of the non-conventional system is isentropic, but the high-pressure compressor is isothermal. If the circulating fluid is CO_2 and the temperature entering (100EF) and leaving (10EF) the cooler are to be the same for both systems (same refrigeration cooling load), and the cooling water temperature entering (50EF) and leaving (70EF) the heat exchanger are also to be the same for both systems. The heater pressure (1100 psia) and cooler pressure (150 psia) are also to be the same for both systems. The CO_2 pressure between the two compressors is 420 psia. With the same refrigeration cooling load, find the compressor power required for both systems.

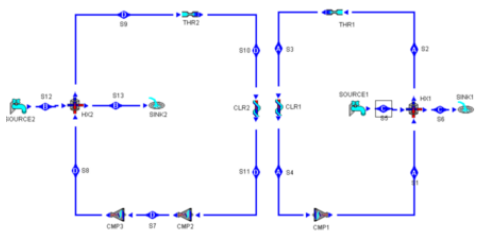

Figure E12.10.2a. Gas refrigeration systems comparison.

To solve this problem by CyclePad, we take the following steps:

1. Build
   (A) Take three compressors, two coolers, two throttling valves, two heat exchangers, two sources, and two sinks from the open system inventory shop and connect the devices to form the two gas refrigeration cycles (cycle A and cycle D).
   (B) Switch to analysis mode.
2. Analysis
   (A) Assume a process for each of the following devices: (a) compressor #1 and #2 as isentropic, (b) coolers and heat exchangers as isobaric, and (c) compressor #3 as isothermal.
   (B) Input the given information: (a) working fluid is CO_2 and the mass flow rate is 1 lbm/s ($mdot_3$=$mdot_{10}$), (b) the inlet temperature and pressure of the coolers are 100EF (T_3=T_{10}) and 10EF (T_4=T_{11}) 150 psia (p_3=p_{10}), (c) the water inlet and outlet temperature and pressure of the heat exchangers are 50EF (T_5=T_{12}) and 70EF (T_6=T_{13}) at atmospheric pressure 14.7 psia (p_5=p_{12}),(d) the working fluid high-pressure of the cycles are 1100 psia (p_9=p_2), (e) the working fluid low-

pressure of the cycles are 150 psia (p_4=p_{11}), and (d) the working fluid pressure between the two compressor of the cycle at the left is 420 psia (p_7).

3. Display results**:** The answers are compressor power required for the system (cycle D) at the left=-71.13 hp, and compressor power required for the system (cycle A) at the right=-75.36 hp.

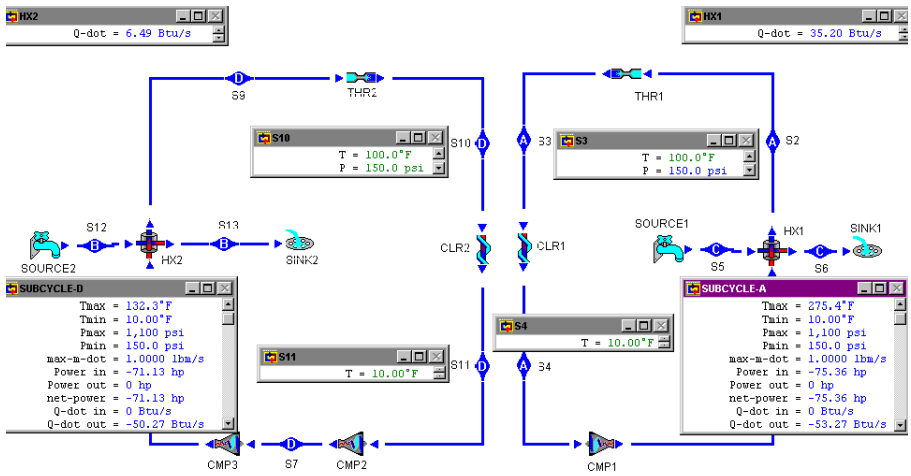

Figure E12.10.2b. Gas refrigeration systems comparison.

Homework 12.10. Gas Refrigeration

1. A 5-ton air ideal Brayton refrigeration system is to be designed according to the following specification:
   Air pressure at compressor inlet: 100 kPa
   Air pressure at turbine inlet: 420 kPa
   Air temperature at compressor inlet: -5EC
   Air temperature at turbine inlet: 25EC
   Determine (A) the air mass rate flow, (B) the compressor power required, (C) the turbine power produced, and (D) the cycle COP.
   ANSWER: (A) 0.2493 kg/s, (B) -34 kW, (C) 25.09 kW, and (D) 1.97.
2. A 5-ton air Brayton refrigeration system is to be designed according to the following specification:
   Compressor efficiency: 82%
   Turbine efficiency: 84%
   Air pressure at compressor inlet: 100 kPa
   Air pressure at turbine inlet: 420 kPa
   Air temperature at compressor inlet: -5EC
   Air temperature at turbine inlet: 25EC
   Determine (A) the air mass rate flow, (B) the compressor power required, (C) the turbine power produced, and (D) the cycle COP.
   ANSWER: (A) 0.3231 kg/s, (B) -53.73 kW, (C) 27.31 kW, and (D) 0.6655.

3. An ideal Brayton refrigeration system uses air as a refrigerant. The pressure and temperature of air at compressor inlet are 14.7 psia and 100EF. The pressure and temperature of air at turbine inlet are 60 psia and 260E F. The mass rate of air flow is 0.03 lbm/s. Determine (A) the cooling load, (B) the compressor power required, (C) the turbine power produced, and (D) the cycle COP.
   ANSWER: (A) 0.1680 ton, (B) -2.82 hp, (C) 2.42 hp, and (D) 2.02.
4. An ideal air Brayton refrigeration system is operated between -10EF and 120EF. The air pressure at compressor inlet is 14.5 psia. The air pressure at turbine inlet is 75.5 psia. The mass rate of air flow is 0.031 lbm/s. Determine (A) the cooling load, (B) the compressor power required, (C) the turbine power produced, and (D) the cycle COP.
   ANSWER: (A) 0.1959 ton, (B) -2.85 hp, (C) 2.29 hp, and (D) 1.66.
5. A two-region-section refrigerator is designed using air as the refrigerant. Air enters the compressor at 15 psia, 20EF and 1 lbm/s. It leaves the compressor at 150 psia. Air leaves the cooler at 80EF, and leaves the turbine at 50 psia. Air enters the high-pressure heater at 50 psia and leaves at 70EF. Air leaves the low-pressure turbine at 15 psia and enters the low-pressureturbine at 15 psia. Find the rate of heat added to the low-temperature heater, rate of heat added to the high-temperature heater, compressor input power, power output, net power input, total rate of heat added, total rate of heat removed, cooling load of the refrigerator, and COPof the cycle based on one unit mass flow rate of refrigerant.
   ANSWER: 32.45 Btu/s, 22.57 Btu/s, -148.2 hp, 101.6 hp, -46.65 hp, 55.02 Btu/s, -87.99 Btu/s, 16.51 ton, 1.67.
6. A two-region-section refrigerator is designed using air as the refrigerant. Air enters the compressor at 15 psia, 20EF and 1 lbm/s. It leaves the compressor at 150 psia. Air leaves the cooler at 80EF, and leaves the turbine at 50 psia. Air enters the high-pressure heater at 50 psia and leaves at 60EF. Air leaves the low-pressure turbine at 15 psia and enters the low-pressureturbine at 15 psia. Find the rate of heat added to the low-temperature heater, rate of heat added to the high-temperature heater, compressor input power, power output, net power input, total rate of heat added, total rate of heat removed, cooling load of the refrigerator, and COPof the cycle based on one unit mass flow rate of refrigerant.
   ANSWER: 30.05 Btu/s, 24.27 Btu/s, -148.2 hp, 100.6 hp, -47.63 hp, 54.32 Btu/s, -87.99 Btu/s, 16.30 ton, 1.61.

12.11. STIRLING REFRIGERATION CYCLE

An ideal reciprocating Stirling refrigeration cycle is shown in Figure 12.11.1. It is the reversible Stirling heat engine cycle, which is composed of two isothermal processes and two isochoric processes. Working fluid is compressed in an isothermal process 1-2 at T_H. Heat is then removed at a constant volume process 2-3. Working fluid is expanded in an isothermal process 3-4 at T_L. The cycle is completed by a constant volume heat addition process 4-1. The T-s diagram of the cycle is illustrated in Figure 12.11.2. Work has been done recently on developing a practical refrigeration device based on the Stirling refrigeration cycle in

extremely low temperatures (less than 200 K or -100EF). In the presence of an ideal regenerator in the cycle, the heat quantity Q_{23} and Q_{41}, which are equal in magnitude but opposite in sign, are exchanged between fluid streams within the device. Hence the only external heat transfer occurs in processes 1-2 at constant temperatures T_H and 3-4 at constant temperatures T_L. Consequently, the coefficient of performance (COP) of the Stirling refrigeration cycle theoretically equals that of the Carnot refrigeration cycle, $T_L/(T_H-T_L)$. The Stirling refrigeration cycle with regenerator is shown in Figure 12.11.3. In this figure, the heater #1 and cooler #1 are the regenerator. Heat removed from cooler #1 is added to the heater #1.

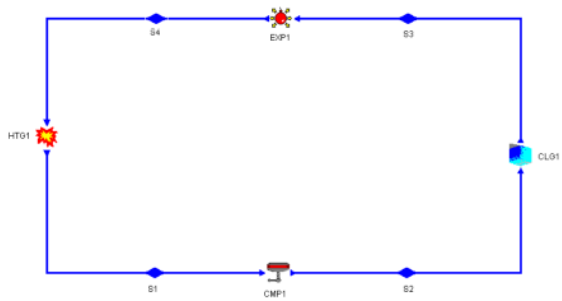

Figure 12.11.1. Stirling refrigeration cycle.

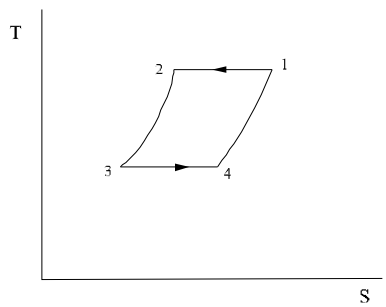

Figure 12.11.2. Stirling refrigeration cycle T-s diagram.

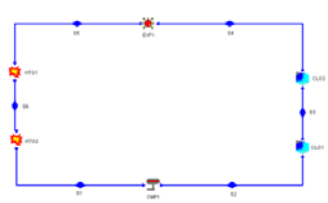

Figure 12.11.3. Stirling refrigeration cycle with regeneration.

Example 12.11.1

In an ideal reciprocating Stirling refrigeration cycle, 0.01 kg of air at 235 K and 10 bars is expanded isothermally to 1 bar. It is then heated to 320 K isometrically. Compression at 320 K isothermally follows, and the cycle is completed by isometric heat removal. Determine the heat added, heat removed, work added, work done, and COP of the cycle.

To solve this problem by CyclePad, we take the following steps:

1. Build
   (A) Take a compression device, a cooling device, an expansion device, and a heating device from the closed system inventory shop and connect the four devices to form the Stirling refrigeration cycle.
   (B) Switch to analysis mode.
2. Analysis
   (A) Assume a process for each the four devices: (a) compression and expansion device as isothermal, and (b) cooling and heating device as isochoric.
   (B) Input the given information: (a) working fluid is air, (b) the inlet temperature and pressure of the expansion are 235 K and 1o bar, m=0.01 kg, (c) the inlet temperature of the compression is 320 K, and exit pressure of the expansion is 1 bar.
3. Display results

Display the cycle properties results. The cycle is a refrigerator. The answers are COP=3.05, Q_{in}=2.16 kJ, Q_{out}=-2.72 kJ, W_{in}=-2.11 kJ, and W_{out}=1.55 kJ. .

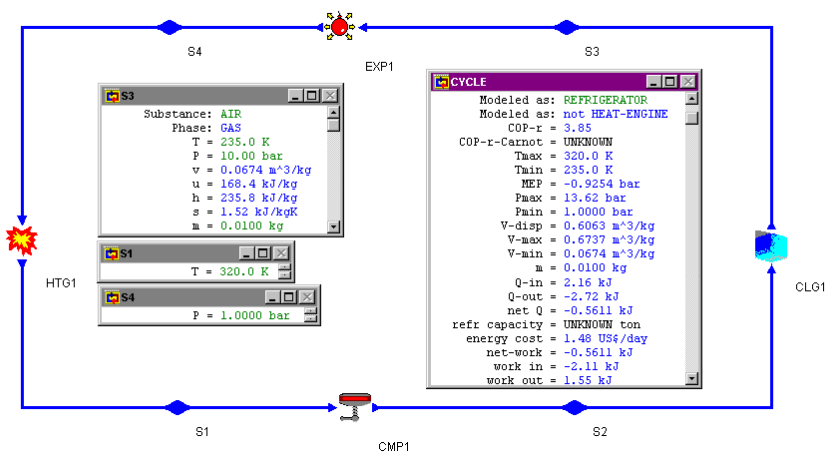

Figure E12.11.1. Stirling refrigeration cycle.

Homework 12.11. Stirling Refrigeration Cycle

1. What are the four basic processes of the Stirling refrigeration cycle?
2. What temperature range is the main application of the Stirling refrigeration cycle?

3. In an ideal reciprocating Stirling refrigeration cycle, 0.01 kg of carbon dioxide at 235 K and 10 bars is expanded isothermally to 1 bar. It is then heated to 320 K isometrically. Compression at 320 K isothermally follows, and the cycle is completed by isometric heat removal. Determine the heat added, heat removed, work added, work done, and COP of the cycle.
   ANSWER: 4.26
4. In an ideal reciprocating Stirling refrigeration cycle, 0.01 kg of helium at 235 K and 10 bars is expanded isothermally to 1 bar. It is then heated to 320 K isometrically. Compression at 320 K isothermally follows, and the cycle is completed by isometric heat removal. Determine the heat added, heat removed, work added, work done, and COP of the cycle.
   ANSWER: 3.41

12.12. ERICSSON CYCLE

The Ericsson refrigeration cycle is a reversible Ericsson power cycle. The schematic Ericsson cycle is shown in Figure 12.12.1. The working fluid usually used in the Ericsson refrigerator is helium or hydrogen. The Ericsson refrigerator may be used for very low temperature application. The cycle consists of two isothermal processes and two isobaric processes. The four processes of the Ericsson refrigeration cycle are isothermal compression process 1-2 (compressor), isobaric cooling process 2-3 (cooler), isothermal expansion process 3-4 (turbine), and isobaric heating process 4-1 (heater).

Applying the basic laws of thermodynamics, we have

$$q_{12} - w_{12} = h_2 - h_1 \tag{12.12.1}$$

$$q_{23} - w_{23} = h_3 - h_2,\ w_{23} = 0 \tag{12.12.2}$$

$$q_{34} - w_{34} = h_4 - h_3 \tag{12.12.3}$$

$$q_{41} - w_{41} = h_1 - h_4,\ w_{41} = 0 \tag{12.12.4}$$

The net work produced by the cycle is

$$w_{net} = w_{12} + w_{34} \tag{12.12.5}$$

The heat added to the cycle in the heater is q_{41}, and The cycle COP is

$$\exists_R = q_{41}/w_{net}. \tag{12.12.6}$$

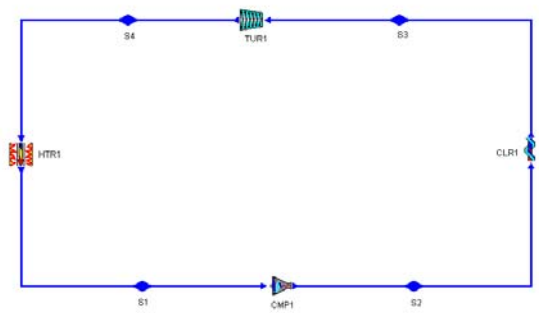

Figure 12.12.1. Ericsson refrigeration cycle.

Example 12.12.1.

0.001 kg/s mass flow rate of helium is compressed and heated from 100 kPa and 300 K in an Ericsson refrigeration cycle to a turbine inlet at 800 kPa and 100 K. Determine power required by the compressor, power produced by the turbine, rate of heat removed from the cooler, rate of heat added in the heater, and cycle COP. Draw the T-s diagram of the cycle.

To solve this problem by CyclePad, we do the following steps:

(A) Build the cycle as shown in Figure 12.12.1. Assume the compressor is isothermal, the heater is isobaric, the turbine is isothermal, and the cooler is isobaric.

(B) Input working fluid=helium, mass flow rate=0.001 kg/s, compressor inlet pressure=100 kPa, compressor inlet temperature=300 K, turbine inlet pressure=800 kPa, and turbine inlet temperature=100 K.

(C) Display results. The answers are: $Qdot_{htr}$=1.47 kW, $Qdot_{clr}$=-2.33 kW, $Wdot_{cmp}$=-1.3 kW, $Wdot_{tur}$=0.4319 kW, $Wdot_{net}$=-0.8638 kW, and $\exists_R$=1.7.

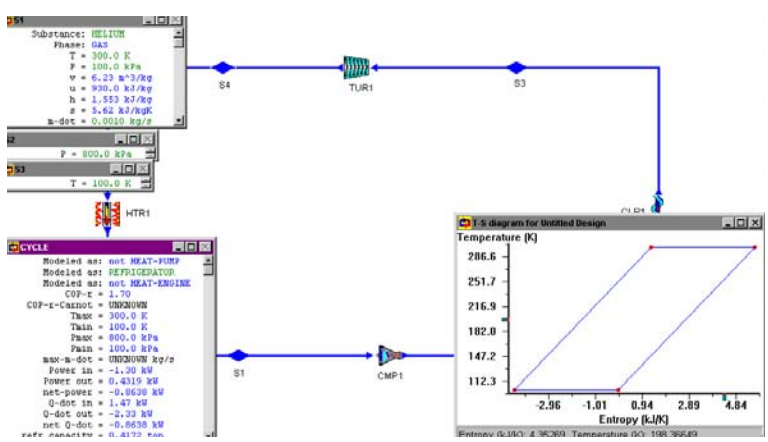

Figure E12.12.1. Ericsson refrigeration cycle.

Homework 12.12. Ericsson Refrigeration Cycle

1. 0.001 kg/s mass flow rate of helium is compressed and heated from 100 kPa and 300 K in an Ericsson refrigeration cycle to a turbine inlet at 500 kPa and 100 K. Determine power required by the compressor, power produced by the turbine, rate of heat removed from the cooler, rate of heat added in the heater, and cycle COP.
   ANSWER: 1.37 kW, -2.04 kW, -1.0 kW, 0.3343 kW, -0.6685 kW, and 2.05.

12.13. LIQUEFACTION OF GASES

The liquefaction of gases is a very important area in refrigeration at very low temperature. Methods of producing very low temperatures refrigeration, liquefying gases, or solidification solids are based on the adiabatic expansion of a high-pressure gas either through a throttling valve or in an expansion turbine. The schematic and T-s diagrams for an ideal Hampson-Linde gas liquefaction system (Reference:Linde, C., The refrigerating machine of today, *ASME Transcations*, pp1414-1441, v14, 1893) are shown in Figure 12.13.1 and Figure 12.13.2. Makeup gas at state 1 is mixed with the uncondensed portion of the gas at state 15 from the previous cycle, and the mixture at state 2 is compressed by a four-stage compressor with inter-coolers (compressor 1, inter-cooler 1, compressor 2, inter-cooler 2, compressor 3, inter-cooler 3, and compressor 4) to state 9. After the multi-stage compression, the gas is cooled from state 9 to state 10 at constant pressure in a cooler. The gas is further cooled to state 11 in a regenerative heat exchanger. After expansion through a throttle valve, the fluid at state 12 is in the liquid-vapor mixture state and is separated into liquid (state 13) and vapor (state 14) states. The liquid at state 13 is drawn off as the desired product, and the vapor at state 14 flows through the regenerative heat exchanger to cool high-pressure gas flowing toward the throttle valve. The gas at state 15 is finally mixed with fresh makeup gas, and the cycle is repeated. This cycle can also be used for the solidification of gases at even lower temperature.

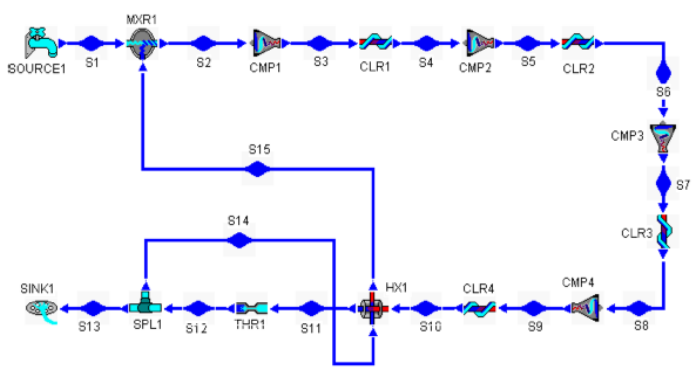

Figure 12.13.1. Hampson-Linde gas liquefaction system schematic diagram.

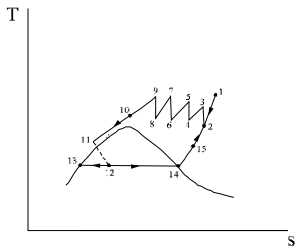

Figure 12.13.2. Hampson-Linde gas liquefaction system T-s diagram.

Figure 12.13.3 is the Claude gas liquefaction system, a modification of the Hampson-Linde gas liquefaction system. The Claude system has a turbine in the expansion process to replace a part of the highly irreversible throttling process of the Hampson-Linde system. From state 1 to state 10, the Claude system processes are the same as those of the Hampson-Linde system. After the gas is cooled to state by the regenerative cooler (heat exchanger 1), most of it is expanded through a turbine from state 12 to state 19 and then is mixed with vapor at state 17 from the separator (splitter 2) and flows back toward the compressor through a heat exchanger which pre-cools the small fraction of the flow that is directed toward the throttle valve instead of the turbine.

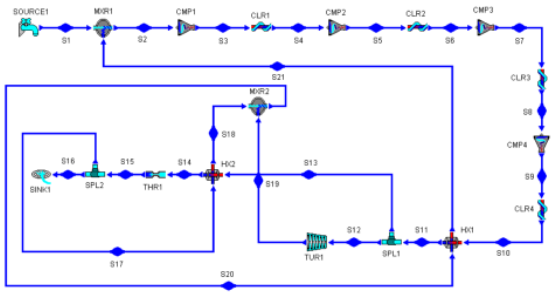

Figure 12.13.3. Claude gas liquefaction system.

12.14. NON-AZEOTROPIC MIXTURE REFRIGERATION CYCLE

The thermodynamic performance of a single working fluid vapor refrigeration cycle may be improved potentially by using a non-azeotropic mixture working fluid such as ammonia-water [Reference: Wu, Chih, Non-azetropic mixture energy conversion, *Energy Conversion and Management*, v25, n2, pp199-206, 1985]. A mixture of two or more different fluids is classified as azeotrope when such a mixture possesses its own thermodynamic properties, quite unlike the thermal and chemical characteristics of its components. A distinguishing feature of this type of fluid is its ability to maintain a permanent composition and uniform boiling point during evaporation, much the same as a pure simple fluid in that its transition from liquid to vapor phase (or vice versa) occurs at a constant pressure and temperature without any change in the composition. Otherwise, the mixture is called non-azetrope. A non-azeotropic mixture has a temperature distribution parallel to that of the thermal reservoir.

Note that one of the requirements for the non-azeotropic mixture energy conversion improvement is to have non-constant temperature heat source and heat sink. The proper choosing of best combination of the non-azeotropic mixture is still not entirely understood. Uncertainties in modeling the thermodynamic and heat transfer aspects of the non-azeotropic mixture refrigeration cycle are such that the probability of realizing significant net benefits in actual application is also not fully known.

An ideal non-azeotropic mixture refrigeration cycle and an ideal Carnot refrigeration cycle operating between a non-constant temperature heat source and a non-constant temperature heat sink are shown in the following T-s diagram, Figure 12.14.1. The ideal Carnot refrigeration cycle consists of an isentropic compression process from state 1 to state 2, an isobaric heat removing process from state 2 to state 3, an isentropic expansion process from state 3 to state 4, and an isobaric heat addition process from state 4 to state 1. The ideal non-azeotropic mixture refrigeration cycle consists of an isentropic compression process from state 6 to state 2, an isobaric heat removing process from state 2 to state 5, an isentropic expansion process from state 5 to state 4, and an isobaric heat addition process from state 4 to state 6, respectively. The inlet and exit temperature of the cooling fluid (finite-heat-capacity heat sink) in the hot-side heat exchanger are T_b and T_a, and the inlet and exit temperature of the heating fluid (finite-heat-capacity heat source) in the cold-side heat exchanger are T_d and T_c, respectively. It is clearly demonstrated that the temperature distribution curves of the ideal non-azeotropic mixture refrigeration cycle (curve 4-6 and curve 2-5) are more closely matched to the the temperature distribution curves of the heat source and heat sink (curve d-c and curve b-a) than the temperature distribution curves of the Carnot refrigeration cycle (curve 4-1 and curve 2-3).

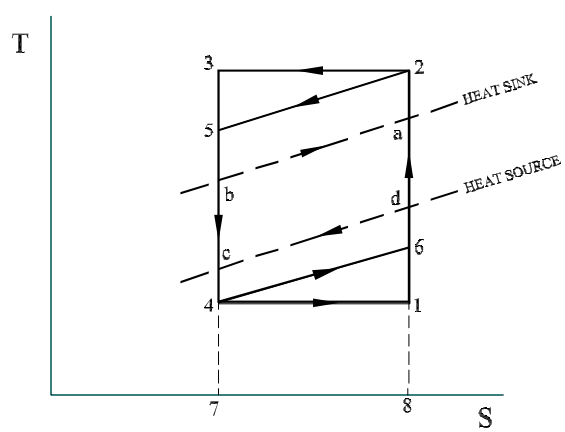

Figure 12.14.1. T-s diagram of ideal non-azeotropic refrigeration cycle and Carnot cycle.

Referring to Figure 12.14.1, the net work added and heat removed to the ideal non-azeotropic mixture refrigeration cycle are $W_{net,non\text{-}aze}$=area46254 and $Q_{non\text{-}aze}$=area46871, and the net work added and heat removed of the Carnot refrigeration cycle are $W_{netCarnot}$=area12341 and Q_{Carnot}=area4178, respectively. The cycle COP of the ideal non-azeotropic mixture refrigeration cycle is $\exists_{non\text{-}aze}=Q_{non\text{-}aze}/W_{net,non\text{-}aze}$=area46871/area46254. Similarly, The cycle COP of the Carnot refrigeration cycle is $\exists_{Carnot}=Q_{Carnot}/W_{net,Carnot}$=area4178/area12341.

Since $Q_{non\text{-}aze}$=area46871 is larger than $_{Qcarnot}$=area4178 and $W_{net,non\text{-}aze}$=area46254 is smaller than $W_{netCarnot}$=area12341, it is apparently that $\exists_{non\text{-}aze}$ is larger than $\exists_{Carnot}$.

A numerical example [Reference: Wu, Chih, Non-azetropic mixture energy conversion, *Energy Conversion and Management*, v25, n2, pp199-206, 1985] using a R-114 and R-12 non-azeotropic mixture to predict the COP of the ideal non-azeotropic mixture refrigeration cycle is carried out. The COP performance results of the cycle are displayed in Figure 12.14.2. At a R114 mass concentration of 25%, a mixed R12-R114 non-azeotropic mixture refrigeration cycle enjoys a COP improvement of 4.4% over single R12 and 9.2% over single R114 refrigeration cycles.

A non-azeotropic mixture of two refrigerants does not always make a better refrigerant. R12-R114 pair may not be the best combination for a non-azeotropic mixture. The proper choosing of best combination is still not entirely understood. Uncertainities in modeling the thermodynamics and heat transfer aspects of the non-azeotropic mixture refrigeration cycle are such that the probability of realizing significant net benefits in actual applications is also not fully known.

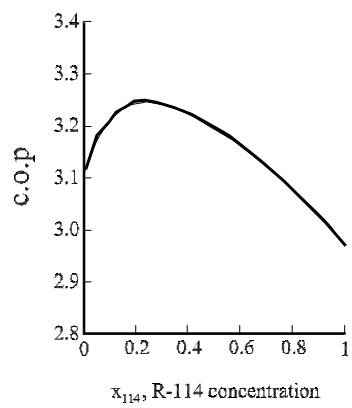

Figure 12.14.2. COP of ideal non-azeotropic R-114 and R-12 refrigeration cycle.

Homework 12.14. Non-Azeotropic Mixture Refrigeration Cycle

1. What is a non-azeotropic mixture refrigerant?
2. Draw an isobaric heating process on a T-s diagram for a non-azeotropic mixture from a superheated vapor state to a compressed liquid state. Does temperature remain the same during the condensation?
3. Why the COP of a vapor refrigeration cycle may be improved potentially by using a non-azeotropic mixture working fluid?

12.15. DESIGN EXAMPLES

Design of refrigeration and heat pump cycles would typically be tedious. With the use of the intelligent computer-aided software CyclePad, however, the design can be completed rapidly and modifications are simple to make. CyclePad makes designing a refrigeration or

heat pump plant as simple as point and click. To demonstrate the power CyclePad offers designers in the design of refrigeration and heat pump cycles, the following design examples are considered.

Example 12.15.1.

A combined split-shaft gas turbine power plant and gas refrigeration system to be used in an airplane as illustrated in Figure E12.15.1a is designed by a junior engineer.

The following design information are provided:

$mdot_1$=1 kg/s, p_1=101 kPa, T_1=15EC, p_2=1000 kPa, T_5=1200EC, p_7=102 kPa, T_{11}=400EC, p_{12}=102 kPa, T_{13}=15EC, $0_{turbine}$=85% and $0_{compressor}$=85%.

(A) During the cruise condition, the split-shaft gas turbine power plant requires to produce 240 kW and 10% of the compressed air is used to the gas refrigeration system which requires to removes 7 kW from the cabin.

(B) During the take-off condition, the split-shaft gas turbine power plant requires to produce 300 kW. and (C) During the high-wind condition, the split-shaft gas turbine power plant requires to produce 270 kW while at least 3.5 kW of cabin refrigeration is to be provided.

Check if all these conditions can be met by the design.

To check this design by CyclePad, we do the following steps:

1. Build the cycle as shown in Figure E12.15.1a. Assume the compressor and turbines are adiabatic with 85% efficiency, the heaters, mixing chambers and cooler are isobaric, and the splitters are iso-parametric.
2. Input working fluid=air, $mdot_1$=1 kg/s, p_1=101 kPa, T_1=15EC, p_2=1000 kPa, T_5=1200EC, p_7=102 kPa, T_{11}=400EC, p_{12}=102 kPa, T_{13}=15EC, $0_{turbine}$=85% and $0_{compressor}$=85%. Display the compressor power (-314.7 kW) and input $Wdot_{turbine\ \#1}$=314.7 kW as shown in Figure E12.15.1b.

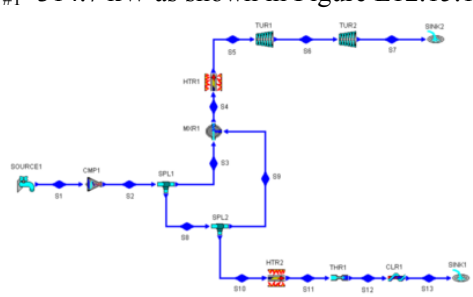

Figure E12.15.1a. Combined gas turbine power plant and gas refrigeration system design.

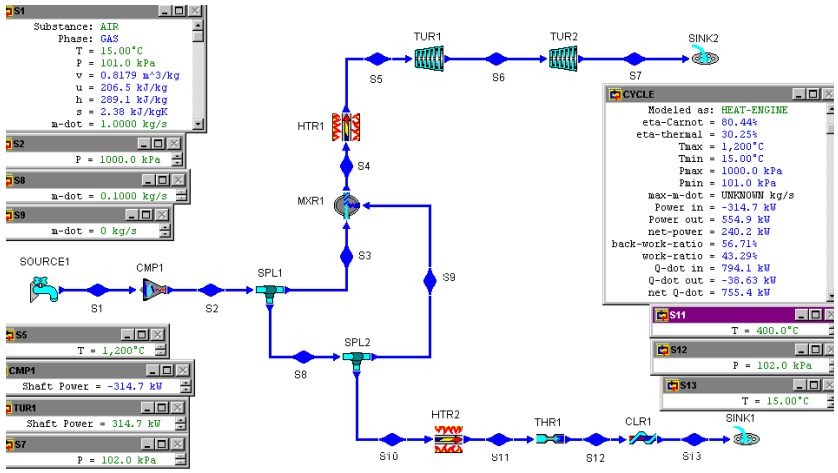

Figure E12.15.1b. Combined gas turbine power plant and gas refrigeration system design input.

(A) Cruise condition: input $mdot_8$=0.1 kg/s, and $mdot_9$=0 kg/s.

Display results. The answers are: $Wdot_{turbine\ \#2}$=240.2 kW and $Qdot_{heater\#2}$=7.16 kW as shown in Figure E12.15.1c. The design requirement is met.

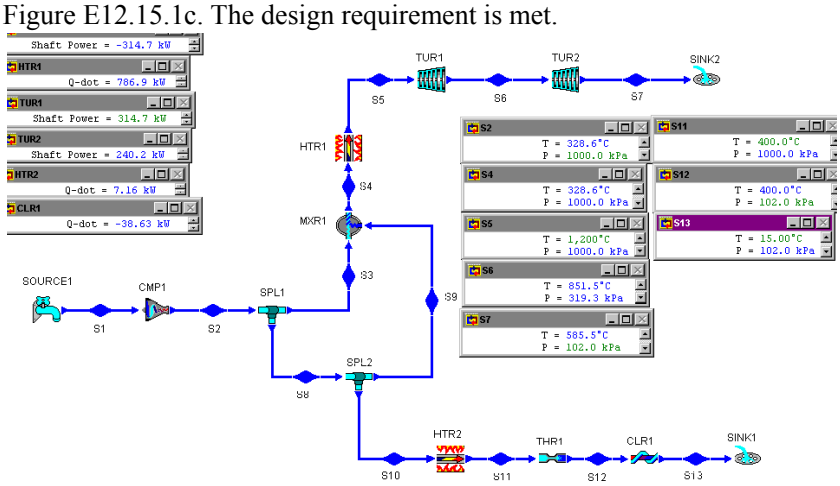

Figure E12.15.1c. Combined gas turbine power plant and gas refrigeration system design at cruise condition.

(B) Take-off condition: input $mdot_9$=0.01 kg/s, and $mdot_{10}$=0 kg/s.

Display results. The answers are: $Wdot_{turbine\ \#2}$=301.7 kW and $Qdot_{heater\#2}$=0 kW as shown in Figure E12.15.1d. The design requirement is met.

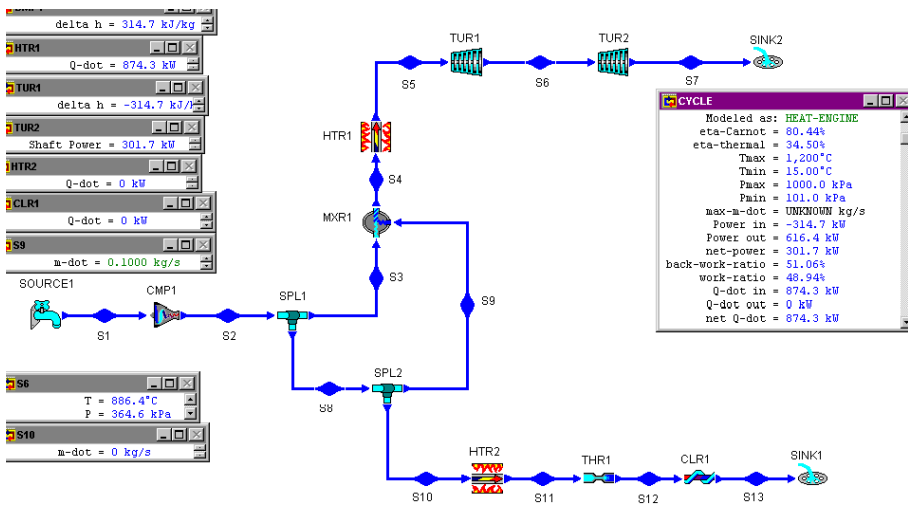

Figure E12.15.1d. Combined gas turbine power plant and gas refrigeration system design at take-off condition.

(C) High-wind condition: input $mdot_9$=0.05 kg/s, and $mdot_{10}$=0.05 kg/s.

Display results. The answers are: $Wdot_{turbine\ \#2}$=271.0 kW and $Qdot_{heater\#2}$=3.58 kW as shown in Figure E12.15.1e. The design requirement is met.

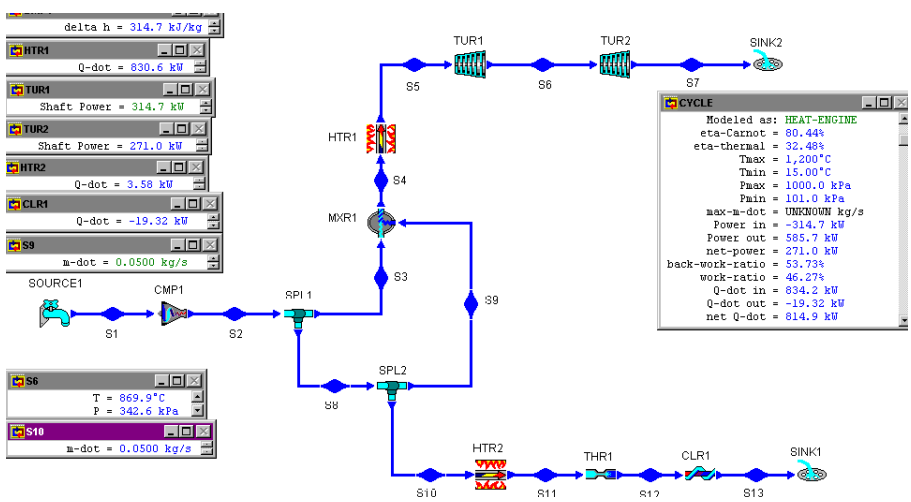

Figure E12.15.1e. Combined gas turbine power plant and gas refrigeration system design at high-wind condition.

Example 12.15.2.

An engineer claims that the performance of a simple refrigeration cycle can be improved by using his three-stage compression process as shown in Figure E12.15.2a. Refrigerant enters all compressors as a saturated vapor, and enters the throttling valve as a saturated

liquid. The highest and lowest pressure of the cycle are 1200 kPa and 150 kPa, respectively. His design information are:

Refrigerant: R-12, $mdot_1$=1 kg/s, p_1=150 kPa, x_1=1, p_3=300 kPa, x_3=1, p_5=600 kPa, x_5=1, p_7=1200 kPa, x_7=0, and $0_{compressor}$=85%.

His design results are: ∃ (COP)=2.16, $Wdot_{in}$=-43.64 kW, $Qdot_{in}$=94.48 kW, $Qdot_{out}$=-138.1 kW, and cooling load=26.87 tons.

(A) Check on his claim,
(B) What are the the performance of the cycle if ammonia, R-134a, or R-22 is used instead of R-12,
(C) Try to improve the COP by varying p_3 and p_5.

Figure E12.15.2a. Single-stage-compressor and Three-stage-compressor refrigeration systems.

(A) To check this design by CyclePad, we do the following steps:

(1) Build the three-stage-compressor refrigeration cycle as shown in Figure E12.15.2a. Assume the compressors are adiabatic with 85% efficiency, and the heater and cooler are isobaric.
(2) Input working fluid=R-12, $mdot_1$=1 kg/s, p_1=150 kPa, x_1=1, p_3=300 kPa, x_3=1, p_5=600 kPa, x_5=1, p_7=1200 kPa, x_7=0, and $0_{compressor}$=85%.
(3) Display the COP=2.22, compressor power (-42.56 kW), $Qdot_{in}$=94.48 kW, $Qdot_{out}$=-137.0 kW and cooling capacity=26.87 tons as shown in Figure E12.15.2b.

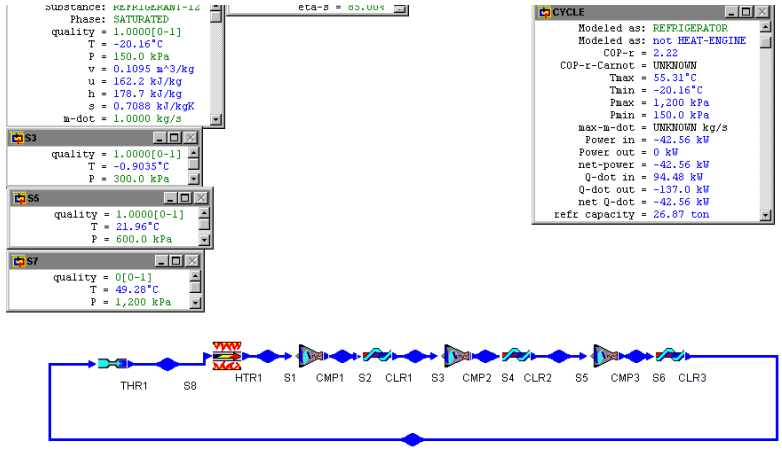

Figure E12.15.2b. Three-stage-compressor refrigeration system using R-12.

(B) For the one-compressor refrigeration system using R-12, (1) retract p_3=300 kPa, x_3=1, p_5=600 kPa, and x_5=1. (2) let $Wdot_{compressor\#1}$=0, $Wdot_{compressor\#2}$=0, $Qdot_{cooler\#1}$=0, and $Qdot_{cooler\#2}$=0. (3) Display results, the results are: COP=2.16, compressor power (-43.64 kW), $Qdot_{in}$=94.48 kW, $Qdot_{out}$=-138.1 kW and cooling capacity=26.87 tons as shown in Figure E12.15.2c. The COP is indeed improved.

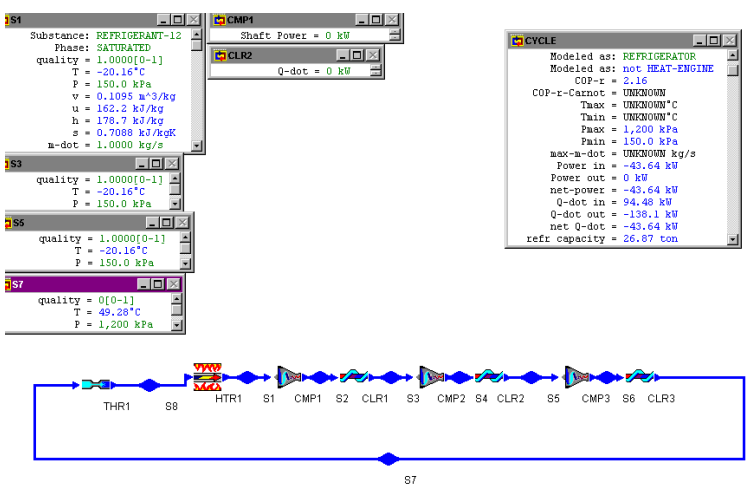

Figure E12.15.2c. One-stage-compressor refrigeration system using R-12.

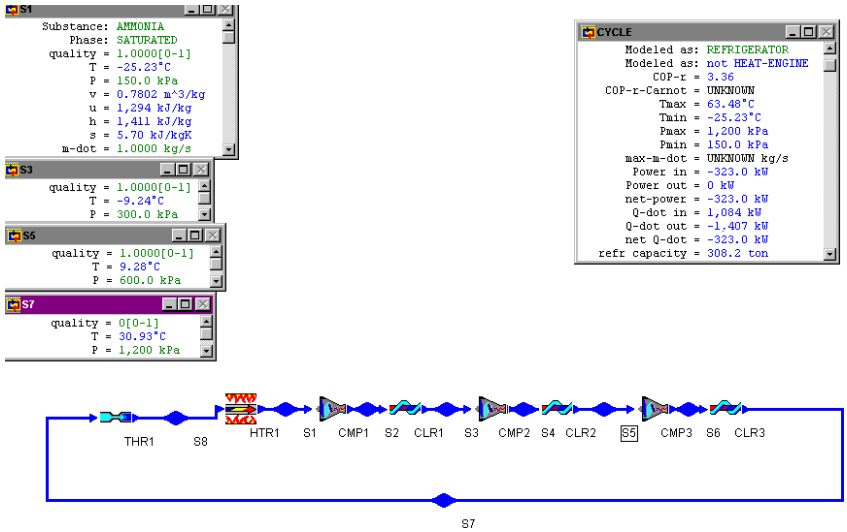

Figure E12.15.2d. Three-stage-compressor refrigeration system using ammonia.

(C) For the three-compressor refrigeration system using ammonia, (1) retract working fluid and let the working fluid be ammonia. (2) Display results, the results are: COP=3.36, compressor power (-323.0 kW), $Qdot_{in}$=1084 kW, $Qdot_{out}$=-1407 kW and cooling capacity=308.2 tons as shown in Figure E12.15.2d.

(D) For the three-compressor refrigeration system using R-134a, (1) retract working fluid and let the working fluid be R-134a. (2) Display results, the results are: COP=2.41, compressor power (-50.41 kW), $Qdot_{in}$=121.6 kW, $Qdot_{out}$=-172.1 kW and cooling capacity=34.59 tons as shown in Figure E12.15.2e.

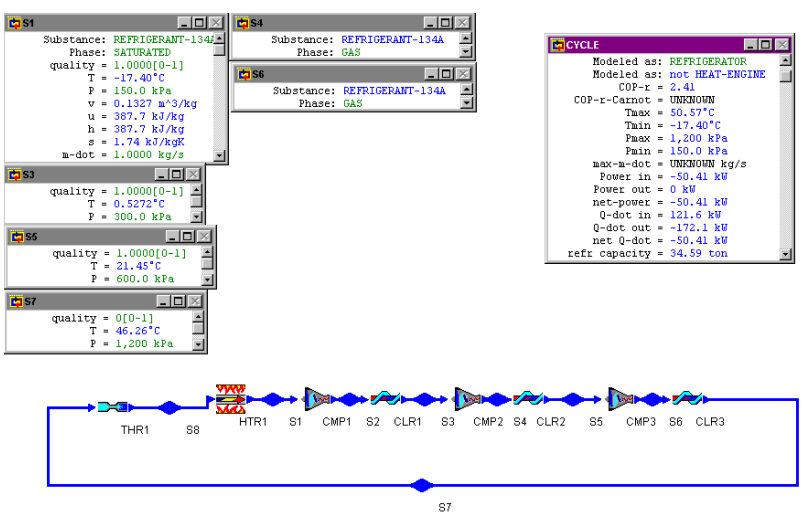

Figure E12.15.2e. Three-stage-compressor refrigeration system using R-134a.

(E) For the three-compressor refrigeration system using R-22, (1) retract working fluid and let the working fluid be R-22. (2) Display results, the results are: COP=2.64,

compressor power (-58.82 kW), $Qdot_{in}$=155.2 kW, $Qdot_{out}$=-214.0 kW and cooling capacity=44.13 tons as shown in Figure E12.15.2f.

(F) To improve the COP by varying p_3 and p_5, draw the COP versus p_3 sensitivity diagram and COP versus p_5 sensitivity diagram as shown in Figure E12.15.2g. The maximum COP is about 2.225 when p_3 is about 309.7 kPa, and the maximum COP is about 2.384 when p_5 is about 898.8 kPa.

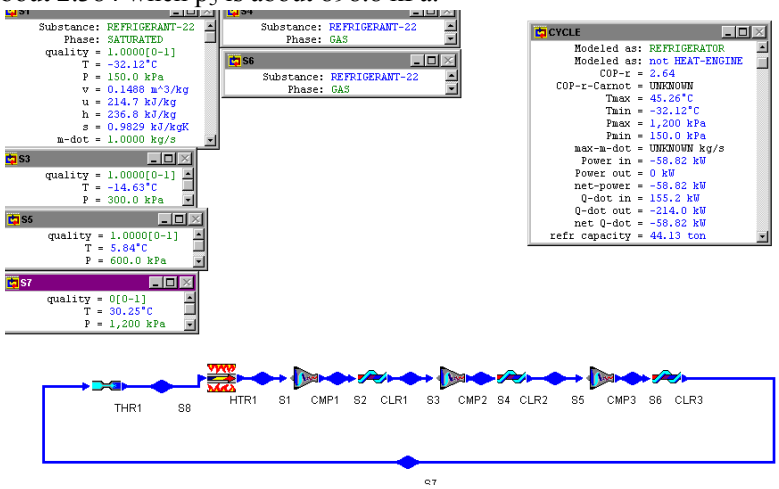

Figure E12.15.2f. Three-stage-compressor refrigeration system using R-22.

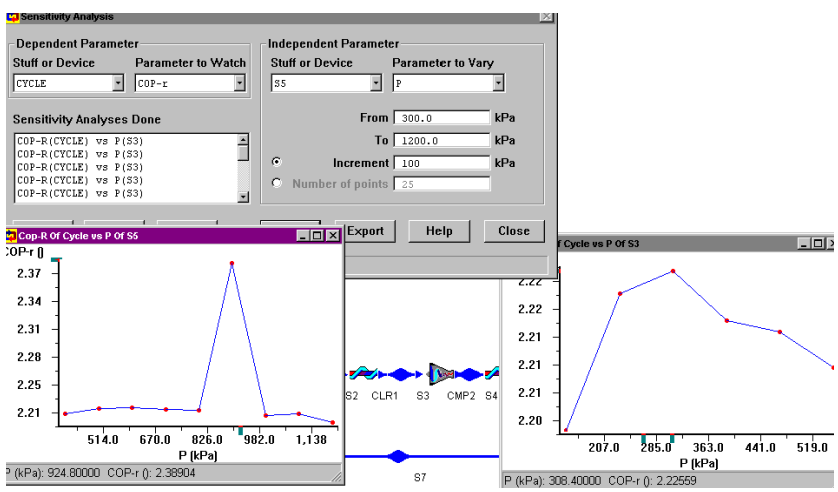

Figure E12.15.2g. Three-stage-compressor refrigeration system sensitivity diagrams.

Homework 12.15. Design Examples

1. The performance of a simple refrigeration cycle can be improved by using cascaded refrigeration cycle. An engineer claims that he has developed a separate three-loop cascaded refrigeration cycle. The cascaded cycle consists of three separate loops--one at high pressure, one at low pressure and one at mid pressure using R-12 as

working fluid in all three loops. The three loops are connected by two heat exchangers. His design information are:

Low-pressure loop– mdot=1 lbm/s, high pressure=60 psia, low pressure=20 psia, $0_{compressor}$=85%, R-12 quality at inlet of compressor=1, and R-12 quality at inlet of throttling valve=0.

Mid-pressure loop– high pressure=110 psia, low pressure=60 psia, $0_{compressor}$=85%, R-12 quality at inlet of compressor=1, and R-12 quality at inlet of throttling valve=0.

High-pressure loop– high pressure=160 psia, low pressure=110 psia, $0_{compressor}$=85%, R-12 quality at inlet of compressor=1, and R-12 quality at inlet of throttling valve=0.

His design results are: Whole system: ∃ (COP)=2.74, $Wdot_{in}$=-29.59 hp, $Qdot_{in}$=57.21 Btu/s, $Qdot_{out}$=-78.12 Btu/s, and cooling load=17.16 tons; Low-pressure loop: $Wdot_{in}$=-13.53 hp, $Qdot_{in}$=57.21 Btu/s, $Qdot_{out}$=-66.78 Btu/s, and mdot=1 lbm/s; Mid-pressure loop: $Wdot_{in}$=-9.41 hp, $Qdot_{in}$=66.78 Btu/s, $Qdot_{out}$=-73.43 Btu/s, and mdot=1.23 lbm/s; and High-pressure loop: $Wdot_{in}$=-6.65 hp, $Qdot_{in}$=73.43 Btu/s, $Qdot_{out}$=-78.12 Btu/s, and mdot=1.43 lbm/s.

(A) Check on his claim, (B) What are the the performance of the cycle if ammonia, or R-22 is used instead of R-12, (C) Try to improve the COP by varying the two pressures of the mid-pressure loop as design variables.

ANSWER: (B) Ammonia– Whole system: ∃ (COP)=3.42, $Wdot_{in}$=-219.0 hp, $Qdot_{in}$=529.9 Btu/s, $Qdot_{out}$=-684.7 Btu/s, and cooling load=159.0 tons; Low-pressure loop: $Wdot_{in}$=-104.2 hp, $Qdot_{in}$=529.9 Btu/s, $Qdot_{out}$=-603.6 Btu/s, and mdot=1 lbm/s; Mid-pressure loop: $Wdot_{in}$=-68.13 hp, $Qdot_{in}$=603.6 Btu/s, $Qdot_{out}$=-651.7 Btu/s, and mdot=1.18 lbm/s; and High-pressure loop: $Wdot_{in}$=-46.65 hp, $Qdot_{in}$=651.7 Btu/s, $Qdot_{out}$=-684.7 Btu/s, and mdot=1.33 lbm/s.

(B) R-22– Whole system: ∃ (COP)=2.95, $Wdot_{in}$=-40.72 hp, $Qdot_{in}$=85.05 Btu/s, $Qdot_{out}$=-113.8 Btu/s, and cooling load=25.51 tons; Low-pressure loop: $Wdot_{in}$=-18.78 hp, $Qdot_{in}$=85.05 Btu/s, $Qdot_{out}$=-98.32 Btu/s, and mdot=1 lbm/s; Mid-pressure loop: $Wdot_{in}$=-12.84 hp, $Qdot_{in}$=98.32 Btu/s, $Qdot_{out}$=-107.4 Btu/s, and mdot=1.22 lbm/s; and High-pressure loop: $Wdot_{in}$=-9.10 hp, $Qdot_{in}$=107.4 Btu/s, $Qdot_{out}$=-113.8 Btu/s, and mdot=1.41 lbm/s.

2. The performance of a simple refrigeration cycle can be improved by using cascaded refrigeration cycle. An engineer claims that he has developed a separate four-loop cascaded refrigeration cycle. The cascaded cycle consists of four separate loops--one between 20 psia and 40 psia, one between 40 psia and 80 psia, one between 80 psia and 120 psia, and one between 120 psia and 160 psia. The four loops are connected by three heat exchangers. His design information are:

   Loop A– mdot=1 lbm/s, high pressure=40 psia, low pressure=20 psia, $0_{compressor}$=85%, R-12 quality at inlet of compressor=1, and R-12 quality at inlet of throttling valve=0.

   Loop B– high pressure=80 psia, low pressure=40 psia, $0_{compressor}$=85%, R-12 quality at inlet of compressor=1, and R-12 quality at inlet of throttling valve=0.

   Loop C– high pressure=120 psia, low pressure=80 psia, $0_{compressor}$=85%, R-12 quality at inlet of compressor=1, and R-12 quality at inlet of throttling valve=0.

Loop D– high pressure=160 psia, low pressure=120 psia, $0_{compressor}$=85%, R-12 quality at inlet of compressor=1, and R-12 quality at inlet of throttling valve=0.

His design results are: Whole system: ∃ (COP)=2.84, $Wdot_{in}$=-31.06 hp, $Qdot_{in}$=62.26 Btu/s, $Qdot_{out}$=-84.21 Btu/s, and cooling load=18.68 tons; Loop A: $Wdot_{in}$=-8.33 hp, $Qdot_{in}$=62.26 Btu/s, $Qdot_{out}$=-68.15 Btu/s, and mdot=1 lbm/s; Loop B: $Wdot_{in}$=-10.37 hp, $Qdot_{in}$=68.15 Btu/s, $Qdot_{out}$=-75.48 Btu/s, and mdot=1.20 lbm/s; Loop C: $Wdot_{in}$=-6.86 hp, $Qdot_{in}$=75.48 Btu/s, $Qdot_{out}$=-80.32 Btu/s, and mdot=1.38 lbm/s; and Loop D: $Wdot_{in}$=-5.50 hp, $Qdot_{in}$=80.32 Btu/s, $Qdot_{out}$=-84.21 Btu/s, and mdot=1.55 lbm/s.

(A) Check on his claim, (B) What are the the performance of the cycle if ammonia, R-134a, or R-22 is used instead of R-12, (C) Try to improve the COP by varying the three pressures (40 psia, 80 psia and 120 psia) of the loops as design variables.

12.16. SUMMARY

The reversed Carnot cycle is modified for the most widely used vapor heat pump and refrigerator. The basic vapor heat pump and refrigerator cycle is made of an isentropic compression process, an isobaric cooling process, an irreversible throttling process, and an isobaric heating process. The coefficient of performance (COP) of refrigerators is defined as Q_L (desirable heat output or cooling effect)/W_{net}. The coefficient of performance (COP) of heat pumps is defined as Q_H (desirable heat output or heating effect)/W_{net}.

Large temperature difference can be achieved by cascaded refrigerators and heat pumps.

Multi-staged refrigerators and heat pumps reduce the compressor power.

Stirling and Ericsson refrigerators have practical applications in very low temperature.

Domestic refrigerator-freezer and air conditioning-heat pump systems share equipments to reduce cost.

An absorption refrigerator or heat pump is economically attractive because it uses inexpensive heat input rather than the expensive electric work input to produce the refrigeration or heat pump effect.

Brayton gas refrigeration cycle is a reversed Brayton gas power cycle.

Liquefaction and solidification of gases are obtained by compression of gas followed by cooling and throttling leading to a change of phase for part of the fluid.

Chapter 13

FINITE-TIME THERMODYNAMICS

13.1. INTRODUCTION

Among the important topics in thermodynamics is the formulation of criteria for comparing the performance of real and ideal processes. Carnot showed that any heat engine absorbing heat from a high temperature heat source reservoir to produce work must transfer some heat to a heat sink reservoir of lower temperature. He also showed that no heat engine could be better than the Carnot heat engine. The early tradition was carried on by Clausius, Kelvin and others using thermodynamics as a tool to find limits on work, heat transfer, efficiency, coefficient of performance, energy effectiveness and energy figure of merit of energy conversion devices. The basic laws of thermodynamics were all conceived based on irreversible processes. However, the subsequent development of thermodynamics has turned from the process variable of heat and work toward state variables since Gibbs. The Carnot-Clausius-Kelvin view emphasizes the interaction of a thermodynamic system with its surroundings, while the Gibbs view makes the properties of the system dominant and focuses on equilibrium states. Contemporary classical thermodynamics gives a fairly complete description of equilibrium states and reversible processes. The only fact that it tells about real processes is that these irreversible processes always produce less work and more entropy than the corresponding reversible processes. Reversible processes are defined only in the limit of infinitely slow execution.

In the real engineering world, actual changes in enthalpy and free energy in an irreversible process rarely approach the corresponding ideal enthalpy and free energy changes. No practicing engineer wants to design a heat engine that runs infinitely slowly without producing power. The need to produce power in real energy conversion devices is one reason why the high efficiency of ideal, reversible performance is seldom approached.

Classical equilibrium thermodynamics can be extended to quasi-static processes. Conventional irreversible thermodynamics has become increasingly powerful, but its microscopic view does not lend itself to the macroscopic view preferred by practicing engineers. This is a significant extension, since quasi-static processes happen in finite time, produce entropy and provide a better approximation of real processes than provided by equilibrium thermodynamics. System parameters in equilibrium thermodynamics are the measurable quantities: volume, temperature, pressure, and heat capacity. To rigorously model real time dependent processes, the set of parameters must also include transport properties,

relaxation time, etc. In general, irreversible thermodynamic problems are too difficult for practicing engineers to solve exactly.

The literature of finite-time thermodynamics started with Curzon and Ahlborn [Reference: Curzon, F.L. and B. Ahlborn, Efficiency of a Carnot engine at maximum power output, *Amer. J. Phys.*, 1975, v.41, n.1, pp22-24] in 1975. They treated an endo-reversible Carnot heat engine power output being limited by the rates of heat transfer to and from the working substance. They remarked that the Carnot efficiency [$0_{Carnot}=1-(T_L/T_H)$, where T_L and T_H are the temperatures of the heat sink and heat source for the engine] is realized only by a completely reversible heat engine operating at zero speed and hence at zero power. They showed that the efficiency of an engine operating at maximum power is given by a remarkably simple formula [$0_{Curzon\text{-}Ahlborn}=1-(T_L/T_H)^{1/2}$], which of course always gives a lower value than the Carnot formula. They also verified that their formula agrees much better with the measured efficiencies of operating installations.

Finite time thermodynamics is an extension to traditional thermodynamics in order to obtain more realistic limits to the performance of real processes, and to deal with processes or devices with finite time characteristics. Finite time thermodynamics is a method for the modeling and optimization of real devices that owe their thermodynamic imperfection to heat transfer, mass transfer and fluid flow irreversibility.

A literature survey of finite-time thermodynamics is given by Wu, Chen and Chen [Reference: Wu, C., Lingen Chen and Jincan Chen, Recent advances in finite-time thermodynamics, Nova Science Publ. Inc., New York, 1999].

Engineering thermodynamic cycle analysis is based on the concept of equilibrium and does not deal with time. Heat transfer does deal with time but not cycle analysis. Finite-time thermodynamics fills in a gap which has long existed between equilibrium thermodynamics and heat transfer.

Homework 13.1. Introduction

1. What is the basic concept of classical engineering equilibrium thermodynamics? Does engineering thermodynamic cycle analysis deal with time?
2. Are the heat transfers between the Carnot heat engine and its surrounding heat source and heat sink reversible?
3. Why cannot the Carnot cycle efficiency be approached in real world?
4. What is finite time thermodynamics?

13.2. RATE OF HEAT TRANSFER

Heat is an amount of microscopic energy transfer across the boundary of a system in an energy interaction with its surroundings. The symbol Q is used to denote heat.

The *rate of heat transfer* is an amount of microscopic energy transfer per unit time across the boundary of a system in an energy interaction with its surroundings. The symbol Qdot is used to denote rate of heat transfer.

The relation between Q and Qdot are:

$$Qdot=*Q/dt \tag{13.2.1}$$

and

$$Q=I(Qdot)dt \tag{13.2.2}$$

There are three modes of rate of heat transfer: conduction ($Qdot_k$), convection ($Qdot_c$) and radiation ($Qdot_r$).

Conduction is a rate of heat transfer through a medium without mass transfer. The basic rate of conduction heat transfer equation is Fourier's law.

$$Qdot_k=-kA(dT/dx) \tag{13.2.3}$$

where k is a heat transfer property called *thermal conductivity*, A is the cross section area normal to the heat transfer, and dT/dx is the temperature gradient in the direction of the heat transfer, respectively.

For example, in the case of a linear temperature gradient, the rate of conduction heat transfer from a high temperature T_H on one side to a low temperature T_L on the other side through a solid wall with thickness L is

$$Qdot_k=kA(T_H -T_L)/L \tag{13.2.4}$$

Convection is a rate of heat transfer leaving a surface to a fluid. The basic rate of convection heat transfer equation is Newton's law.

$$Qdot_c=hA(T_{surface}-T_{fluid}) \tag{13.2.5}$$

where h is a heat transfer transport property called *convection coefficient*, A is the surface area, and ($T_{surface}$-T_{fluid}) is the temperature difference between the surface and the fluid.

Radiation is a rate of heat transfer by electromagnetic waves emitted by matters. Unlike conduction and convection, radiation does not require an intervening medium to propagate. The basic rate of radiation heat transfer equation between a high temperature (T_H) black body and a low temperature (T_L) black body is Stefan-Boltzmann's law.

$$Qdot_r=\Phi A\ [(T_H)^4-(T_L)^4] \tag{13.2.6}$$

where Φ is the Stefan-Boltzmann's constant, and A is the emitting surface area, respectively.

Radiation heat transfer is usually not important in ordinary heat exchanger design and analysis, unless significant temperature differences are present.

Equation (13.2.4) and Equation (13.2.5) can be rewritten in the Ohm's law forms as

$$Qdot_k=(T_H -T_L)/(L/kA)=(T_H -T_L)/R_k \tag{13.2.7}$$

and

$$Qdot_c=(T_{surface}-T_{fluid})/(1/hA)=(T_{surface}-T_{fluid})/R_c \quad (13.2.8)$$

where R_k is the conduction heat transfer resistance and R_c is the convection heat transfer resistance.

Usually, the rate of heat transfer is a combination of conduction and convection in a heat exchanger system as illustrated in Figure 13.2.1 and only the fluid temperature on either side of the solid surface is known. For steady state, the rate of conduction heat transfer and the rate of convection heat transfer are equal. The total resistance (R) of the combined rate of heat transfer is

$$R=3R_k + 3R_c \quad (13.2.9)$$

The rate of the combined heat transfer (Qdot) is

$$Qdot=(T_H-T_L)/(1/UA)=(T_H-T_L)/R \quad (13.2.10)$$

where U is the overall heat transfer coefficient.

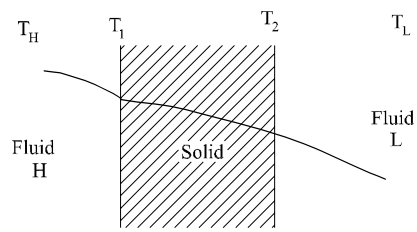

Figure 13.2.1. Rate of heat transfer in a heat exchanger.

Homework 13.2. Rate of Heat Transfer

1. What are the three modes of heat transfer?
2. How does conduction differ from convection?
3. What is the mechanism of radiation heat transfer?
4. What is the overall heat transfer coefficient, U?

13.3. HEAT EXCHANGER

One of the most important thermodynamic devices is the heat exchanger. Heat exchanger can be classified as mixed flow, recuperative and regenerative types.

In the *mixed flow type heat exchanger*, one fluid being cooled and another fluid being heated are mixed together.

In the *recuperative flow type heat exchanger*, the fluid being cooled is physically separated from the fluid being heated by some solid boundary.

In the *regenerative flow type heat exchanger*, there is only one set of flow channels. The hot fluid enters through the channels and heats the material in the heat exchanger surrounding the channels. The hot fluid then exits the heat exchanger. Next, the cold fluid enters through the channels and is heated by the material in the heat exchanger surrounding the channels. The cold fluid then exits the heat exchanger.

The three commonly used recuperative flow type heat exchanger in power and refrigeration industry are *parallel-flow*, *counter-flow* and *cross-flow* heat exchanger. Consider the case where a fluid is flowing through a pipe and exchanging energy with another fluid flowing around the pipe. When the fluids flow in the same direction, it is a parallel-flow heat exchanger. When the fluids flow in the opposite directions, it is a counter-flow heat exchanger. When the fluids flow in the normal directions, it is a cross-flow heat exchanger. The operation of parallel-flow and counter-flow heat exchanger and their associated temperature profiles are shown in Figure 13.3.1.

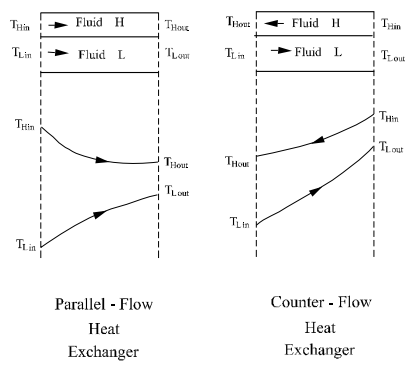

Figure 13.3.1. Operation of parallel-flow and counter-flow heat exchanger and their associated temperature profiles.

As can be seen from the non-linear temperature profiles, the temperature difference between the fluids varies from one end of the heat exchanger to the other end. To find an effective temperature difference between the two fluids, a logarithmic mean temperature difference (LMTD) is defined as

$$LMTD=[(T_{B1}-T_{A1})-(T_{B2}-T_{A2})]/Ln[(T_{B1}-T_{A1})/(T_{B2}-T_{A2})] \quad (13.3.1)$$

The rate of heat transfer between the two fluids is

$$Qdot=UA(LMTD) \quad (13.3.2)$$

where U is the overall heat transfer coefficient, A is the surface area of the tube(s), respectively.

Usually, the counter-flow heat exchanger is smaller than the parallel-flow heat exchanger because the LMTD of the counter-flow heat exchanger is larger than the LMTD of the parallel-flow heat exchanger when the inlet and outlet temperatures of the hot fluid and the inlet and outlet temperatures of the cold fluid are identical. The following example illustrate this comparison.

Example 13.3.1.

A counter-flow lubricating oil cooler with a net heat transfer area of 258 ft^2 cools 60000 lbm of oil per hour from a temperature of 145EF to 120EF. The temperature of the cooling water entering and leaving are 75EF and 90EF. The specific heat of the oil is 0.5 Btu/[lbm(EF)]. Find the LMTD and overall heat transfer coefficient under these operating conditions. Also find the required area for a parallel-flow heat exchanger under these identical operating conditions. The temperature profiles of the counter-flow and parallel-flow heat exchanger are shown in Figure 13.3.1

Solution:

$Qdot=[mdot(c)(T_{in}-T_{exit})]_{oil}$ =60000(0.5)(145-120)=750000 Btu/hr

LMTD=[(145-90)-(120-75)]/Ln[(145-90)/(120-75)]=49.8EF

U=Qdot/[A(LMTD)]=750000/[258(49.8)]=58.4 Btu/[hr(ft^2)EF]

For the parallel-flow heat exchanger

LMTD=[(145-75)-(120-90)]/Ln[(145-75)/(120-90)]=47.2EF

and

A=Qdot/[U(LMTD)]=750000/[58.4(47.2)]=272 ft^2. This area is larger than 258 ft^2.

Example 13.3.2.

A counter-flow heater as shown in Figure E13.3.2a heats helium at 101 kPa from a temperature of 20EC to 800EC. The temperature of the heating flue gas (air) entering and leaving are 1800EC and 1200EC at 101 kPa. (A) Find the LMTD, rate of helium flow and heat transfer based on unit of heating flue gas. (B) Also find the LMTD, rate of helium flow and heat transfer for a parallel-flow heat exchanger under these identical operating conditions.

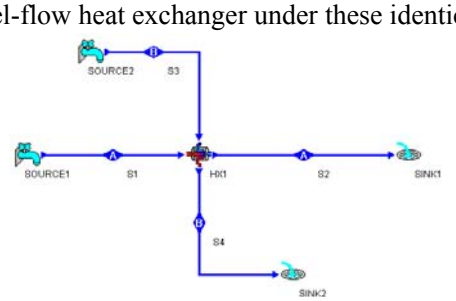

Figure E13.3.2a. Heat exchanger.

(A) To solve this problem by CyclePad, we take the following steps:

(1) Build the heat exchanger as shown in Figure E13.3.2a.

(2) Analysis: (a) Assuming both hot- and cold-side of the heat exchanger are isobaric, and type is counter-flow. (b) Input hot-side fluid=air, T_1=1800EC, p_1=101 kPa, $mdot_1$=1 kg/s, and T_2=1200EC; cold-side fluid=helium, T_3=20EC, p_3=101 kPa, and T_4=800EC.

(3) Display results: The results are: LMTD=1088EC, Qdot=602 kW, and $mdot_3$=0.1491 kg/s as shown in Figure E13.3.2b.

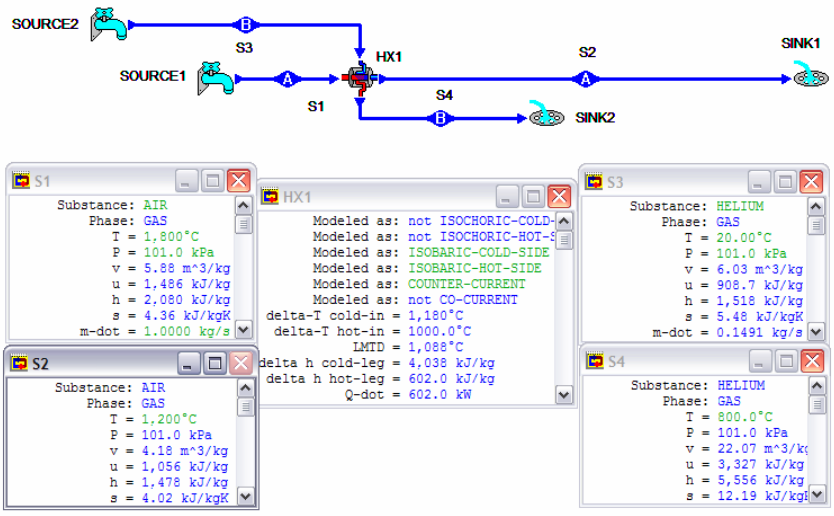

Figure E13.3.2b. Heat exchanger input and output results.

(B)

(1) Analysis: (a) retract the heat exchanger type to counter-flow, and (b) input the heat exchanger type is co-current (parallel)-flow.

(2) Display results: The results are: LMTD=924.4EC, Qdot=602 kW, and $mdot_3$=0.1491 kg/s as shown in Figure E13.3.2c.

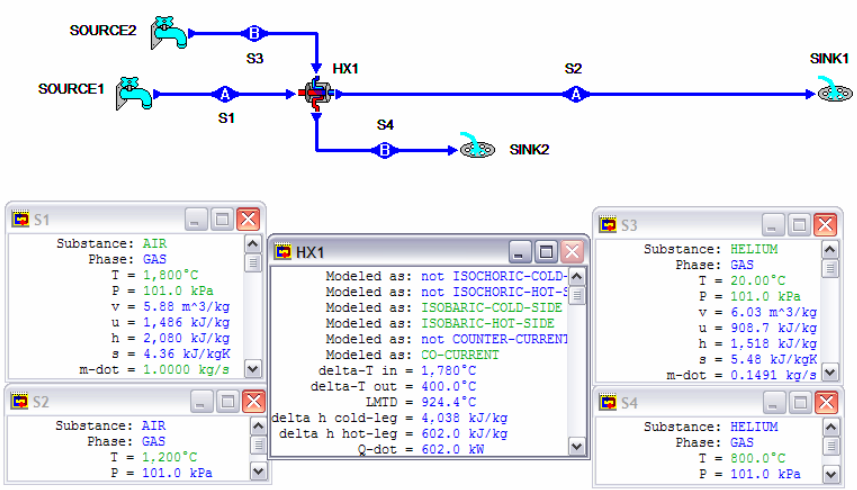

Figure E13.3.2c. Heat exchanger input and output results.

Example 13.3.3.

A counter-flow heat exchanger heats water at 101 kPa from saturated liquid state to saturated vapor state. The temperature of the heating flue gas (air) entering and leaving are 1800EC and 1200EC at 101 kPa. (A) Find the LMTD, rate of water flow and heat transfer based on unit mass of heating flue gas. (B) Also find the LMTD, rate of helium flow and heat transfer for a parallel-flow heat exchanger under these identical operating conditions.

(A) To solve this problem by CyclePad, we take the following steps:

(1) Build the heat exchanger as shown in Figure E13.3.2a.

(2) Analysis: (a) Assume both hot- and cold-side of the heat exchanger are isobaric, and type is counter-flow. (b) Input hot-side fluid=air, T_1=1800EC, p_1=101 kPa, $mdot_1$=1 kg/s, and T_2=1200EC; cold-side fluid=water, p_3=101 kPa, x_3=0, and x_4=1.

(3) Display results: The results are: LMTD=1378EC, Qdot=602 kW, and $mdot_3$=0.2668 kg/s as shown in Figure Example 7.3.3a.

(B)

(1) Analysis: (a) retract the heat exchanger of counter-flow, and (b) input the heat exchanger type is co-current (parallel)-flow.

(2) Display results: The results are: LMTD=1378EC, Qdot=602 kW, and $mdot_3$=0.2668 kg/s as shown in Figure Example 13.3.3b.

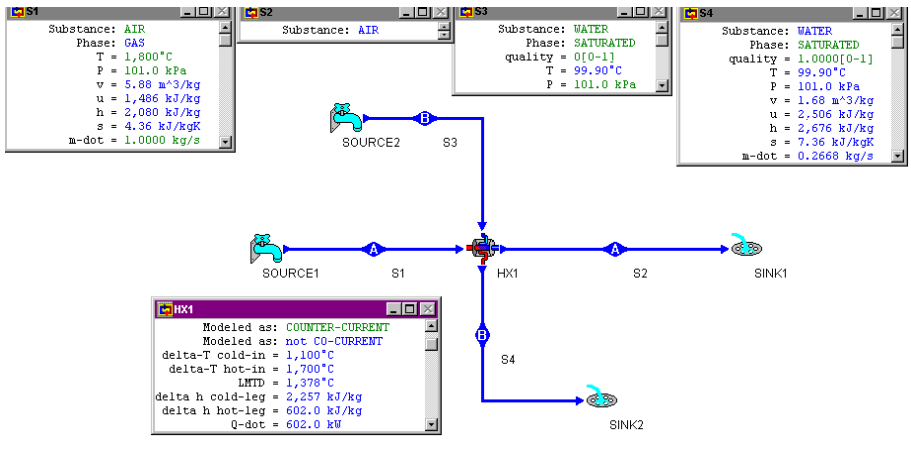

(a)

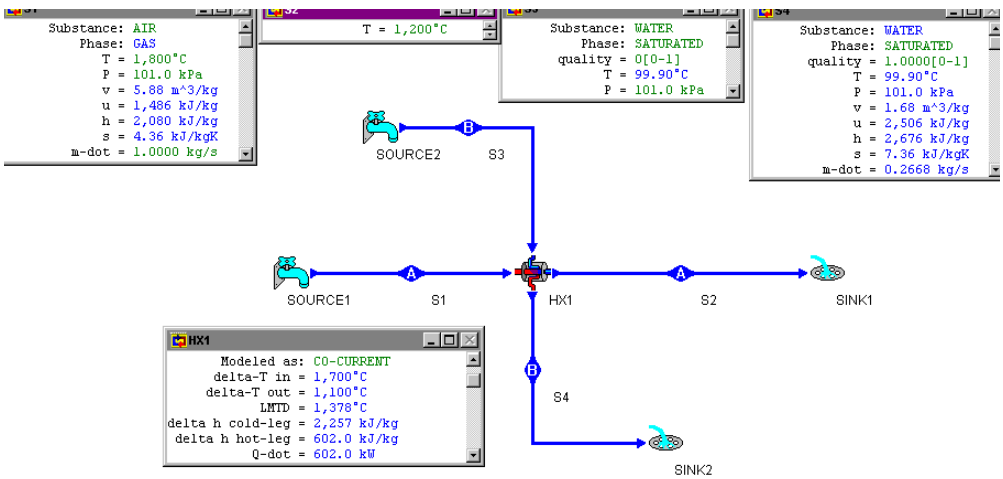

(b)

Figure E13.3.3a and b. Heat exchanger input and output results.

Homework 13.3. Heat Exchanger

1. A counter-flow heater heats ammonia at 101 kPa from saturated liquid state to saturated vapor state. The temperature of the heating air entering and leaving are 33EC and 17EC at 101 kPa. (A) Find the LMTD, rate of water flow and heat transfer based on unit of heating flue gas. (B) Also find the LMTD, rate of helium flow and heat transfer for a parallel-flow heat exchanger under these identical operating conditions.

   ANSWER: (A) LMTD=58.05EC, Qdot=16.05 kW, and $mdot_3$=0.0117 kg/s. (B) LMTD=58.05EC, Qdot=16.05 kW, and $mdot_3$=0.0117 kg/s.

13.4. CURZON AND AHLBORN (ENDOREVERSIBLE CARNOT) CYCLE

The T-s diagram and schematic diagram of the Curzon and Ahlborn endo-reversible Carnot cycle [Reference: Curzon, F.L. and B. Ahlborn, Efficiency of a Carnot engine at maximum power output, *Amer. J. Phys.*, 1975, v.41, n.1, pp22-24] are shown in Figure 13.4.1 and Figure 13.4.2, respectively. The cycle operates between a heat source at temperature T_H and a heat sink at temperature T_L. The temperatures of the working fluid in the isothermal heat addition and heat rejection processes are T_W and T_C. The finite temperature difference (T_H-T_W) allows a finite heat transfer from the heat source to the working fluid in the heat addition process. Similarly, the finite temperature difference (T_C-T_L) allows a heat transfer from the working fluid to the heat sink in the heat rejection process. The cycle is a modified Carnot cycle. Other than the external irreversibility due to the two heat transfer processes, the modified cycle is an internal reversible heat engine.

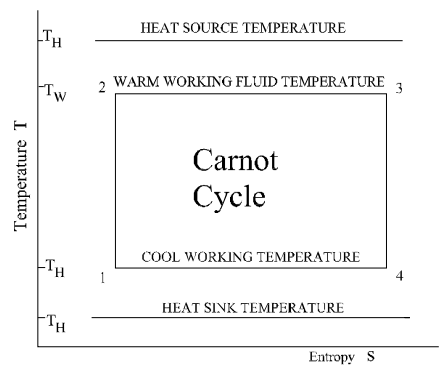

Figure 13.4.1. Curzon and Ahlborn cycle T-s diagram.

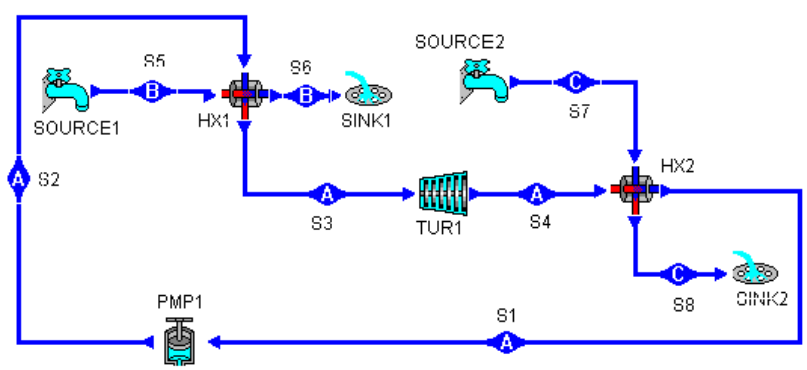

Figure 13.4.2. Curzon and Ahlborn cycle schematic diagram.

Assume that the working fluid flows through the heat engine in a steady-state fashion. The rates of heat rejection and addition of the heat engine are:

$$Qdot_H=U_HA_H(T_H-T_W) \quad (13.4.1)$$

$$Qdot_L=U_LA_L(T_C-T_L) \quad (13.4.2)$$

where U_H is the heat transfer coefficient and A_H is the heat transfer surface area of the high-temperature side heat exchanger between the heat engine and the heat source; U_L is the heat transfer coefficient and A_L is the heat transfer surface area of the low-temperature side heat exchanger between the heat engine and the heat sink.

The total heat transfer surface area (A) of the two heat exchangers is assumed to be a constant.

$$A=A_H+A_L \quad (13.4.3)$$

The power output (P) of the heat engine according to the first law of thermodynamics is

$$P=Qdot_H-Qdot_L \quad (13.4.4)$$

The second law of thermodynamics requires that

$$Qdot_H/T_W=Qdot_L/T_C \quad (13.4.5)$$

The efficiency (0) of the heat engine is

$$0=P/Qdot_H \quad (13.4.6)$$

We define a heat transfer surface area ratio (f)

$$f=A_H/A_L \quad (13.4.7)$$

Combining Eqs.(13.4.1)-(13.4.7) gives the optimum value of f at maximum power output (f_a) and the optimal power output for given values of T_H, T_L, U_H, U_L, A and 0.

$$f=f_a=(U_L/U_H)^{1/2} \quad (13.4.8)$$

$$P=[T_H-T_L/(1-0)]0B_1 \quad (13.4.9)$$

where $B_1=(U_HA)/[1+(U_L/U_H)^{-1/2}]^2$ (13.4.10)

Eq.(13.4.9) is the optimal performance characteristics of the endo-reversible Carnot heat engine. It indicates that P=0 when 0=0 and $0=0_c=1-T_L/T_H$. Taking the derivative of P with respect to 0 and setting it equal to zero (dP/d0=0) gives

$$0=0_{C\text{-}A}=1-(T_L/T_H)^{1/2} \quad (13.4.11)$$

and the optimal power output delivered by the cycle is

$$P_{max}=B_1\,[(T_H)^{1/2}-(T_L)^{1/2}]^2 \quad (13.4.12)$$

The power versus efficiency characteristics of the endo-reversible Carnot heat engine is a parabolic curve. The endo-reversible heat engine is a simple model which considers the external heat transfer irreversibility between the heat engine and its surrounding heat reservoirs only.

The required optimum intermediate temperatures at maximum power condition are

$$T_W=\{(T_H)^{0.5}+[U_LA_L/(U_HA_H)](T_L)^{0.5}\}/\{1+[U_LA_L/(U_HA_H)]\}(T_H)^{0.5} \quad (13.4.13)$$

and

$$T_C=\{(T_H)^{0.5}+[U_LA_L/(U_HA_H)](T_L)^{0.5}\}/\{1+[U_LA_L/(U_HA_H)]\}(T_L)^{0.5} \quad (13.4.14)$$

By taking into account the rate of heat transfer associated with the endo-reversible cycle, the upper bound of the power output of the cycle can be found. This bound provides a practical basis for a real power plant design. The industrial view is that the heat engine efficiency is secondary to the power output in power plants whose worth is constrained by economic consideration.

Another important industrial design objective function for power cycle design is net power per unit conductance of heat exchangers. The conductance of the high-temperature-side heat exchanger is U_HA_H in Eq. (7.4.1), and the conductance of the low-temperature-side heat exchanger is U_LA_L in Eq. (13.4.2). The net power per unit conductance of heat exchanger $[Wdot_{net}/(U_HA_H+U_LA_L)]$ represents the initial cost and operational cost of heat exchanger, which is a very important part of the power plant.

For many power plants such as waste-heat plants, geothermal plants and OTEC (Ocean thermal energy conversion) plants which have relatively small fuel cost, the industrial design objective function for these power cycle design is specific net power. The specific net power is defined as $Wdot_{net}/(A_H+A_L)$. The total cost of these plants is determined mainly by the construction cost. From the view points of cost and size, the most important components of these plants are the heat exchanger. The volume of supporting structure, the weight of buoyance-adjusting-ballast, the length of pipe, head loss, pump power and all other major components increases as the size of the heat exchanger increases. High performance of these plants is essential for producing power. For this reason, the performance evaluation objective function of these plants is taken to be the specific power.

Example 13.4.1.

An endo-reversible (Curzon and Ahlborn) cycle operates between a heat source at temperature T_H=1600 K and a heat sink at temperature T_L=400 K. Suppose U_H=100 kW/m^2 (overall heat transfer coefficient of the high-temperature side heat exchanger between the heat engine and the heat source), A_H=1 m^2 (heat transfer surface area of the high-temperature side heat exchanger between the heat engine and the heat source), and U_L=100 kW/m^2 (overall heat transfer coefficient of the low-temperature side heat exchanger between the heat engine and the heat sink). Determine the maximum power output of the cycle. Find the heat transfer added, heat transfer removed, heat transfer surface area of the low-temperature side heat

exchanger between the heat engine and the heat sink, and efficiency of the cycle at the maximum power output condition.

Solution: $Qdot_H=U_HA_H(T_H-T_W)=100(1)(1600-1200)=40000$ kW.

$Qdot_H/T_W=40000/1200=Qdot_L'/T_C=Qdot_L/600$ gives $Qdot_L=20000$ kW

$Qdot_L=20000=U_LA_L(T_C-T_L)=100A_L(600-400)$ gives $A_L=1$ m^2

$P=Qdot_H-Qdot_L=40000-20000=20000$ kW

and

$0=1-(T_C/T_W)=1-(400/1600)^{1/2}=50\%$.

Example 13.4.2.

An endo-reversible (Curzon and Ahlborn) steam cycle operates between a heat source at temperature T_H=640 K and a heat sink at temperature T_L=300 K. The following information is given:

Heat source: fluid=water, T_5=640 K, x_5=1, T_6=640 K, and x_6=0
Heat sink: fluid=water, T_7=300 K, x_7=0, T_8=300 K, and x_8=1
Steam cycle: fluid=water, x_2=0, T_3=500 K, x_3=1, T_4=400 K, and mdot=1 kg/s.

Determine the rate of heat added from the heat source, rate of heat removed to the heat sink, power required by the isentropic pump, power produced by the isentropic turbine, net power produced and efficiency of the cycle.

To solve this problem by CyclePad, we take the following steps:

1. Build the cycle and its surroundings as shown in Figure 13.4.2.
2. Analysis: (A) Assuming the heat exchangers are isobaric (notice that isobaric is also isothermal in the saturated mixture region), and turbine and pump are isentropic. (B) Input Heat source fluid=water, T_5=640 K, x_5=1, T_6=640 K, and x_6=0; Heat sink fluid=water, T_7=300 K, x_7=0, T_8=300 K, and x_8=1; Steam cycle fluid=water, x_2=0, T_3=500 K, x_3=1, T_4=400 K, and mdot=1 kg/s.
3. Display results: The results are: rate of heat added from the heat source=1827 kW, rate of heat removed to the heat sink=-1462 kW, power required by the isentropic pump=-50.53 kW, power produced by the isentropic turbine=416.0 kW, net power produced=365.4 kW and efficiency of the cycle=20%.

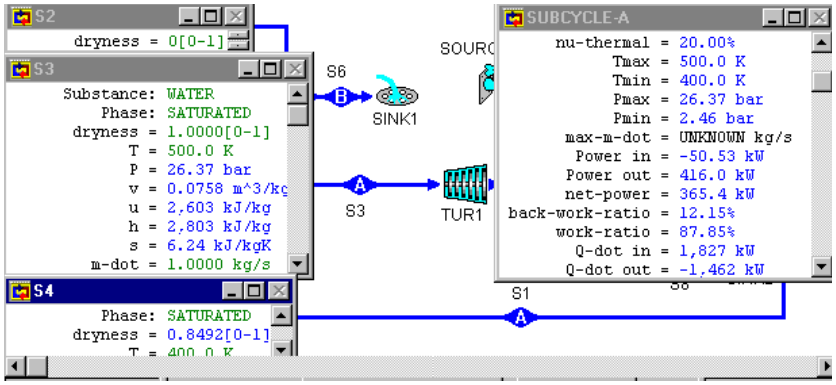

Figure E13.4.2. Endo-reversible (Curzon and Ahlborn) steam cycle.

Example 13.4.3.

An endoreversible (Curzon and Ahlborn) steam cycle operates between a heat source at temperature T_H=640 K and a heat sink at temperature T_L=300 K. The following information is given:

Heat source: fluid=water, T_5=640 K, x_5=1, T_6=640 K, and x_6=0
Heat sink: fluid=water, T_7=300 K, x_7=0, T_8=300 K, and x_8=1
Steam cycle: fluid=water, x_2=0, x_3=1, T_4=400 K, and mdot=1 kg/s.

Determine the maximum net power produced and working fluid temperature at the inlet of the turbine.

To solve this problem by CyclePad, we take the following steps:

1. Build the cycle and its surroundings as shown in Figure 13.4.2.
2. Analysis: (A) Assuming the heat exchangers are isobaric (notice that isobaric is also isothermal in the saturated mixture region), and turbine and pump are isentropic. (B) Input Heat source fluid=water, T_5=640 K, x_5=1, T_6=640 K, and x_6=0; Heat sink fluid=water, T_7=300 K, x_7=0, T_8=300 K, and x_8=1; Steam cycle fluid=water, x_2=0, T_3=500 K, x_3=1, T_4=400 K, and mdot=1 kg/s.
3. Sensitivity analysis: Plot net power versus T_3 diagram as shown in Figure E13.4.3. The answer are: maximum net power is about 427.0 kW and T_3 is about 558.6 K.

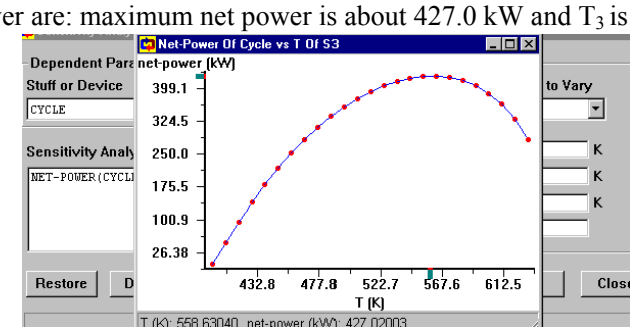

Figure E13.4.3. Endo-reversible cycle Sensitivity analysis.

Comment: The partial optimization is only for M(net power)/M(T_3)=0. To have the full optimization, we must let M(net power)/M(T_4)=0 also.

Example 13.4.4.

An endo-reversible (Curzon and Ahlborn) steam cycle as shown in Figure E13.4.4a operates between a heat source at temperature T_H=300EC and a heat sink at temperature T_L=20EC. The following information is given:

Heat source: fluid=water, T_1=300EC, x_1=1, T_2=300EC, and x_2=0
Heat sink: fluid=water, T_3=20EC, x_3=0, T_4=20EC, and x_4=1
Carnot cycle: fluid=water, T_5=100EC, s_5=3.25 kJ/kg(K), T_7=200EC, s_7=5.70 kJ/kg(K), and mdot=1 kg/s.
The heat exchangers are counter-flow type, U_H=0.4 kJ/(m^2)K and U_L=0.4 kJ/(m^2)K.

Determine the rate of heat added from the heat source, rate of heat removed to the heat sink, power required by the isentropic pump, power produced by the isentropic turbine, net power produced and efficiency of the cycle.

Taking the specific net power output (net output power per unit total heat exchanger surface area) as the design objective function, optimize the warm-side (heater or high-temperature-side heat exchanger) and cold-side (cooler or low-temperature-side heat exchanger) working fluid temperatures.

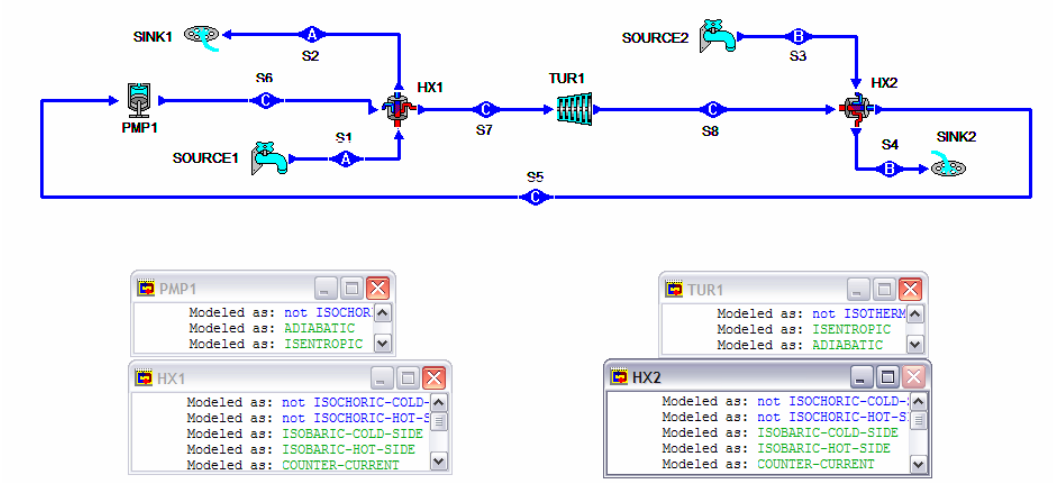

Figure E13.4.4a. Finite-time Carnot cycle.

To solve this problem by CyclePad, we take the following steps:

1. Build the cycle and its surroundings as shown in Figure E13.4.4a.
2. Analysis: (A) Assuming the heat exchangers are isobaric and counter-flow, and turbine and pump are isentropic. (B) Input Heat source: fluid=water, T_1=300EC, x_1=1, T_2=300EC, and x_2=0

Heat sink: fluid=water, T_3=20EC, x_3=0, T_4=20EC, and x_4=1.

Carnot cycle: fluid=water, T_5=100EC, s_5=3.25 kJ/kg(K), T_7=200EC, s_7=5.70 kJ/kg(K), and mdot=1 kg/s.

3. Display results: The results are: $LMTD_H$=100 K, $LMTD_H$=80 K, rate of heat added from the heat source=1159 kW, rate of heat removed to the heat sink=-914.2 kW, power required by the isentropic pump=-143.2 kW, power produced by the isentropic turbine=388.2 kW, net power produced=245.0 kW and efficiency of the cycle=21.14% as shown in Figure E14.4.4b.
4. Calculate $U_HA_H=Q_H/LMTD_H$=1159/100=11.59 kW/K, $U_LA_L=Q_L/LMTD_L$=914.2/80 =11.43 kW/K, $U_HA_H+U_LA_L$=11.59+11.43=23.02 kW/K, and specific net power output=$Wdot_{net}/(A_H+A_L)$=245.0/(11.59/0.4+11.43/0.4)=13.31 kW/m^2.
5. To optimize the specific power output of the cycle, let M(specific power output)/MT_7=0 first and then let M(specific power output)/MT_7=0 as shown in the following two tables, Table E13.4.4a and Table E13.4.4b.

It is seen that M(specific power output)/MT_7=0 occurs at T_7=220EC as shown in Table E13.4.4a.

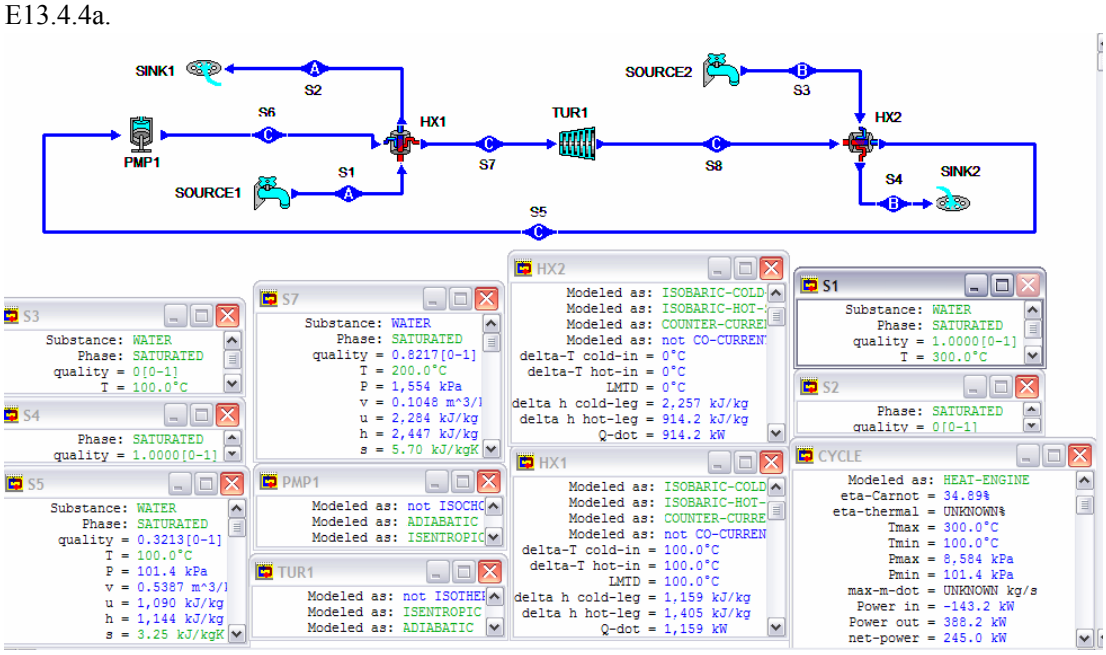

Figure E13.4.4b. Finite-time Carnot cycle input and output.

Table E13.4.4a. Specific power optimization with respect to T_7

		T1=T2=300		T3=T4=20									
T5	T7	pnet/UA	pnet/A	efficiency	power in	power out	powernet	heat in	heat out	LMTDH	LMTDL	UHAH	ULAL
100	100.1	0.015276	0.019096	0.0267	-0.195	0.4395	0.2444	914.2	-914.2	200	80	4.571	11.4275
100	120	2.920981	3.651226	5.09	-36.72	85.74	49.01	963.2	-914.2	180	80	5.351111	11.4275
100	140	5.522602	6.903253	9.69	-69.22	167.3	98.04	1012	-914.2	160	80	6.325	11.4275
100	160	7.734371	9.667963	13.85	-97.68	244.7	147	1061	-914.2	140	80	7.578571	11.4275
100	180	9.478902	11.84863	17.66	-122.3	318.3	196	1110	-914.2	120	80	9.25	11.4275
100	200	10.64408	13.30509	21.14	-143.2	388.2	245	1159	-914.2	100	80	11.59	11.4275
100	**220**	**11.08284**	**13.85355**	**24.34**	**-160.6**	**454.6**	**294**	**1208**	**-914.2**	**80**	**80**	**15.1**	**11.4275**
100	240	10.59378	13.24222	27.28	-174.6	517.6	343	1257	-914.2	60	80	20.95	11.4275
100	260	8.893426	11.11678	30.01	-185.5	577.5	392	1306	-914.2	40	80	32.65	11.4275
100	280	5.569764	6.962205	32.54	-193.2	634.2	441	1355	-914.2	20	80	67.75	11.4275
100	299.9	0.034822	0.043528	34.86	-198.4	687.7	489.3	1404	-914.2	0.1	80	14040	11.4275
			assume UH=UL=0.4 kJ/m^2(K)										

6. let M(specific power output)/MT_5=0

It is seen that M(specific power output)/MT_5=0 occurs at T_5=80EC as shown in Table E13.4.4b.

Table E13.4.4bSpecific power optimization with respect to T_5

T5	T7	pnet/UA	pnet/A	efficiency	power in	power out	powernet	heat in	heat out	LMTDH	LMTDL	UHAH	ULAL
20.1	220	0.068036	0.085045	40.54	-354.9	844.5	489.8	1208	-718.4	80	0.1	15.1	7184
40	220	8.249158	10.31145	36.5	-298.7	739.8	441	1208	-767.2	80	20	15.1	38.36
60	220	11.0407	13.80087	32.45	-247.8	639.8	392	1208	-816.2	80	40	15.1	20.405
80	**220**	**11.61924**	**14.52405**	**28.39**	**-201.8**	**544.9**	**343**	**1208**	**-865.2**	**80**	**60**	**15.1**	**14.42**
100	220	11.08284	13.85355	24.34	-160.6	454.6	294	1208	-914.2	80	80	15.1	11.4275
120	220	9.906194	12.38274	20.28	-123.9	368.9	245	1208	-963.2	80	100	15.1	9.632
140	220	8.328612	10.41076	16.22	-91.38	287.4	196	1208	-1012	80	120	15.1	8.433333
160	220	6.48189	8.102362	12.17	-62.92	209.9	147	1208	-1061	80	140	15.1	7.578571
180	220	4.446965	5.558707	8.11	-38.35	136.3	98	1208	-1110	80	160	15.1	6.9375
200	220	2.274955	2.843694	4.06	-17.4	66.41	49	1208	-1159	80	180	15.1	6.438889
219.9	220	0.011569	0.014461	0.0202	-0.0787	0.3233	0.2446	1208	-1208	80	199.9	15.1	6.043022

7. Let T_5=80EC and T_7=220EC, the optimized specific power output of the cycle is 14.53 kW/m^2. At the maximum optimized specific power output condition, $LMTD_H$=80 K, $LMTD_H$=60 K, rate of heat added from the heat source=1208 kW, rate of heat removed to the heat sink=-865.2 kW, power required by the isentropic pump=-201.8 kW, power produced by the isentropic turbine=544.9 kW, net power produced=343.0 kW and efficiency of the cycle=28.39% as shown in Figure E13.4.4c.

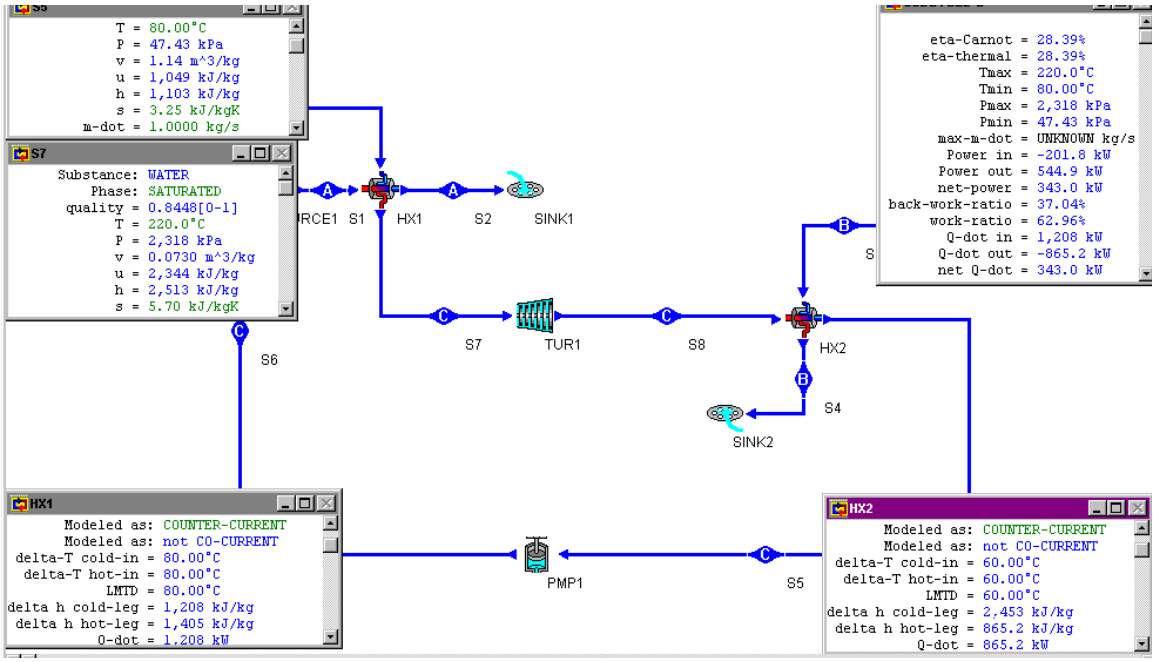

Figure E13.4.4c. Finite-time Carnot cycle optimization result.

Homework 13.4. Curzon and Ahlborn Cycle with Infinite Heat Capacity Heat Source and Sink

1. An endo-reversible (Curzon and Ahlborn) cycle operates between a heat source at temperature T_H=3600 K and a heat sink at temperature T_L=300 K. The temperatures of the working fluid in the isothermal heat addition and heat rejection processes are T_W=2000 K and T_C=400 K. Suppose U_H=100 kW/m^2 (overall heat transfer coefficient of the high-temperature side heat exchanger between the heat engine and the heat source), A_H=1 m^2 (heat transfer surface area of the high-temperature side heat exchanger between the heat engine and the heat source), and U_L=100 kW/m^2 (overall heat transfer coefficient of the low-temperature side heat exchanger between the heat engine and the heat sink). Determine the heat transfer added, heat transfer removed, heat transfer surface area of the low-temperature side heat exchanger between the heat engine and the heat sink, power output and efficiency of the cycle.
2. Referring to problem 1 and with fixed heat source and heat sink temperatures, determine the maximum power output of the cycle. Find the working fluid temperatures in the isothermal heat addition and heat rejection processes, heat transfer added, heat transfer removed, heat transfer surface area of the low-temperature side heat exchanger between the heat engine and the heat sink, and efficiency of the cycle at the maximum power output condition.
3. An endoreversible (Curzon and Ahlborn) steam cycle operates between a heat source at temperature T_H=640 K and a heat sink at temperature T_L=300 K. The following information is given:

Heat source: fluid=water, T_5=600 K, x_5=1, T_6=600 K, and x_6=0
Heat sink: fluid=water, T_7=290 K, x_7=0, T_8=290 K, and x_8=1
Steam cycle: fluid=water, x_2=0, T_3=550 K, x_3=1, T_4=300 K, and mdot=1 kg/s.
Determine the rate of heat added from the heat source, rate of heat removed to the heat sink, power required by the isentropic pump, power produced by the isentropic turbine, net power produced and efficiency of the cycle.

4. Referring to problem 1 and with fixed heat source and heat sink temperatures as well as working fluid temperatures in the isothermal heat rejection processes, determine the maximum power output of the cycle. Find the working fluid temperatures in the isothermal heat addition, heat transfer added, heat transfer removed, and efficiency of the cycle at the maximum power output condition. Draw the sensitivity diagram.
5. Referring to problem 3 and with fixed heat source and heat sink temperatures as well as working fluid temperatures in the isothermal heat addition processes, determine the maximum power output of the cycle. Find the working fluid temperatures in the isothermal heat removing, heat transfer added, heat transfer removed, and efficiency of the cycle at the maximum power output condition. Draw the sensitivity diagram.
6. An endo-reversible (Curzon and Ahlborn) steam cycle as shown in Figure 13.4.2 operates between a heat source at temperature T_H=300EC and a heat sink at temperature T_L=40EC. The following information is given:
   Heat source: fluid=water, T_1=300EC, x_1=1, T_2=300EC, and x_2=0
   Heat sink: fluid=water, T_3=40EC, x_3=0, T_4=40EC, and x_4=1
   Carnot cycle: fluid=water, T_5=100EC, s_5=3.25 kJ/kg(K), T_7=200EC, s_7=5.70 kJ/kg(K), and mdot=1 kg/s.
   The heat exchangers are counter-flow type, U_H=0.4 kJ/(m^2)K and U_L=0.4 kJ/(m^2)K.
   Determine the rate of heat added from the heat source, rate of heat removed to the heat sink, power required by the isentropic pump, power produced by the isentropic turbine, net power produced and efficiency of the cycle.
   Taking the specific net power output (net output power per unit total heat exchanger surface area) as the design objective function, optimize the warm-side (heater or high-temperature-side heat exchanger) and cold-side (cooler or low-temperature-side heat exchanger) working fluid temperatures.

13.5. CURZON AND AHLBORN CYCLE WITH FINITE HEAT CAPACITY HEAT SOURCE AND SINK

The T-s diagram and schematic diagram of the *Curzon and Ahlborn (endo-reversible Carnot) cycle* are shown in Figure 13.5.1 and Figure 13.5.2, respectively. The cycle operates between a heat source and a heat sink with finite heat capacity. The fluid of the heat source enters the hot-side heat exchanger at T_5 and exits at T_6. The fluid of the heat sink enters the cold-side heat exchanger at T_7 and exits at T_8. The temperatures of the working fluid in the isothermal heat addition and heat rejection processes are T_W and T_C. The finite mean temperature difference $LMTD_H$ {$LMTD_H=(T_5-T_6)/[LN\ (T_5-T_W)/(T_6-T_W)]$} allows a finite heat transfer from the heat source to the working fluid in the heat addition process. Similarly, the finite mean temperature difference $LMTD_L$ {$LMTD_L=(T_8-T_7)/[LN\ (T_C-T_7)/(T_C-T_8)]$} allows a

heat transfer from the working fluid to the heat sink in the heat rejection process. The cycle is a modified Carnot cycle. Other than the external irreversibility due to the two heat transfer processes, the modified cycle is an internal reversible heat engine.

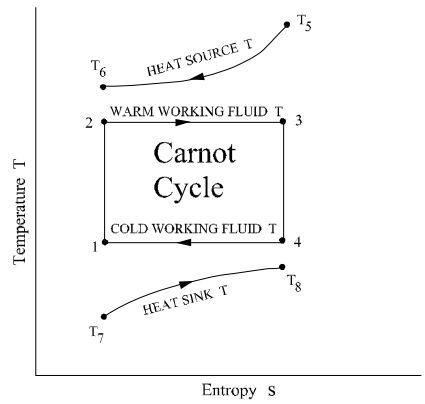

Figure13.5.1Curzon and Ahlborn cycle with finite heat capacity source and sink T-s diagram

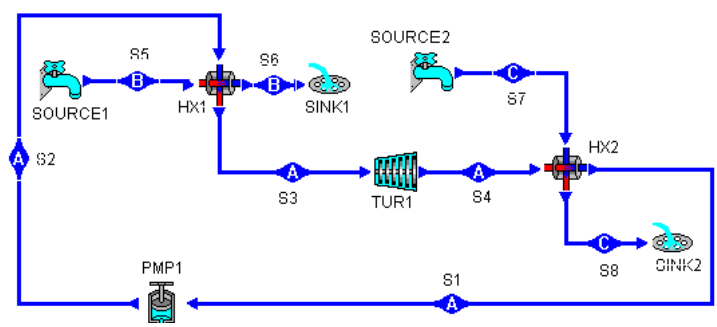

Figure 13.5.2 Curzon and Ahlborn cycle with finite heat capacity source and sink schematic diagram

Assume that the working fluid flows through the heat engine in a steady-flow and steady-state fashion. The rates of heat rejection and addition of the heat engine are:

$$Qdot_H=U_H A_H LMTD_H \tag{13.5.1}$$
$$Qdot_L=U_L A_L LMTD_L \tag{13.5.2}$$

where U_H is the heat transfer coefficient and A_H is the heat transfer surface area of the high-temperature side heat exchanger between the heat engine and the heat source; U_L is the heat transfer coefficient and A_L is the heat transfer surface area of the low-temperature side heat exchanger between the heat engine and the heat sink.

The total heat transfer surface area (A) of the two heat exchangers is assumed to be a constant.

$$A=A_H+A_L \tag{13.5.3}$$

The power output (P) of the heat engine according to the first law of thermodynamics is

$$P=Qdot_H-Qdot_L \tag{13.5.4}$$

The second law of thermodynamics requires that

$$Qdot_H/T_W=Qdot_L/T_C \tag{13.5.5}$$

The efficiency (0) of the heat engine is

$$0=P/Qdot_H \tag{13.5.6}$$

Example 13.5.1.

An endo-reversible (Curzon and Ahlborn) steam cycle operates between a finite heat capacity heat source and a finite heat capacity heat sink. The following information is given:

Heat source: fluid=air, T_5=1500 K, p_5=1 bar, T_6=650 K, and p_6=1 bar
Heat sink: fluid=air, T_7=290 K, p_7=1 bar, T_8=400 K, and p_8=1 bar
Steam cycle: fluid=water, x_2=0, T_3=500 K, x_3=1, T_4=420 K, and mdot=1 kg/s.

Determine the rate of heat added from the heat source, rate of heat removed to the heat sink, power required by the isentropic pump, power produced by the isentropic turbine, net power produced and efficiency of the cycle.

To solve this problem by CyclePad, we take the following steps:

1. Build the cycle and its surroundings as shown in Figure 13.5.2.
2. Analysis: (A) Assuming the heat exchangers are isobaric, and turbine and pump are isentropic. (B) Input Heat source fluid=air, T_5=1500 K, p_5=1 bar, T_6=650 K, and p_6=1 bar; Heat sink: fluid=air, T_7=290 K, p_7=1 bar, T_8=400 K, and p_8=1 bar; Steam cycle: fluid=water, x_2=0, T_3=500 K, x_3=1, T_4=420 K, and mdot=1 kg/s.
3. Display results: The results are: rate of heat added from the heat source=1827 kW, rate of heat removed to the heat sink=-1535 kW, power required by the isentropic pump=-32.83 kW, power produced by the isentropic turbine=325.1 kW, net power produced=292.3 kW and efficiency of the cycle=16%.

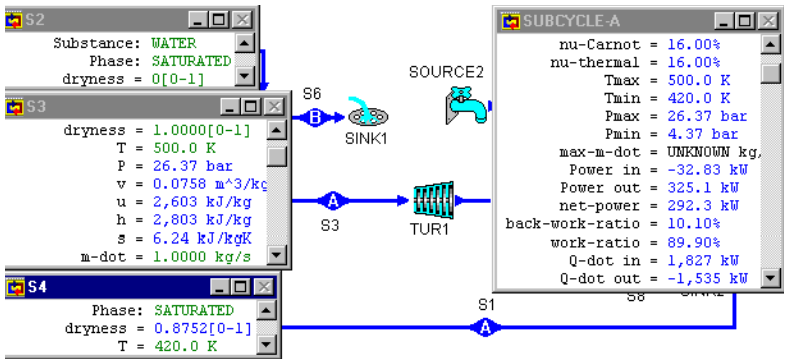

Figure E13.5.1. Curzon and Ahlborn cycle with finite heat capacity heat source and sink.

Example 13.5.2.

An endo-reversible (Curzon and Ahlborn) steam cycle operates between a finite heat capacity heat source and a finite heat capacity heat sink. The following information is given:

Heat source: fluid=air, T_5=1500 K, p_5=1 bar, T_6=650 K, and p_6=1 bar
Heat sink: fluid=air, T_7=290 K, p_7=1 bar, T_8=400 K, and p_8=1 bar
Steam cycle: fluid=water, x_2=0, x_3=1, T_4=420 K, and mdot=1 kg/s.

Determine the maximum net power produced and working fluid temperature at the inlet of the turbine with fixed condenser temperature.

To solve this problem by CyclePad, we take the following steps:

1. Build the cycle and its surroundings as shown in Figure 13.5.2.
2. Analysis: (A) Assuming the heat exchangers are isobaric (notice that isobaric is also isothermal in the saturated mixture region), and turbine and pump are isentropic. (B) Input heat source: fluid=air, T_5=1500 K, p_5=1 bar, T_6=650 K, and p_6=1 bar; heat sink: fluid=air, T_7=290 K, p_7=1 bar, T_8=400K,and p_8=1 bar; steam cycle: fluid=water, x_2=0, x_3=1, T_4=420 K, and mdot=1 kg/s.
3. Sensitivity analysis: Plot net power versus T_3 diagram as shown in Figure E13.5.2. The answer are: maximum net power is about 375.2 kW and T_3 is about 563.7 K.

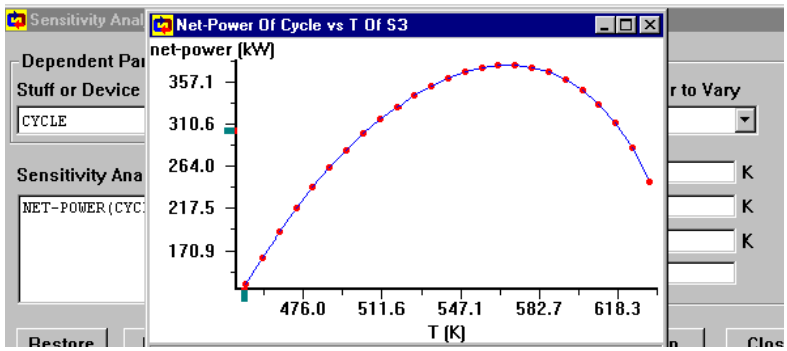

Figure E13.5.2. Endo-reversible cycle with finite heat capacity heat source and sink sensitivity analysis.

Comment: The partial optimization is only for M(net power)/M(T_3)=0. To have the full optimization, we must let M(net power)/M(T_4)=0 also.

Homework 13.5 Curzon and Ahlborn Cycle with Finite Heat Capacity Heat Source and Sink

1. An endo-reversible (Curzon and Ahlborn) steam cycle operates between a finite heat capacity heat source and a finite heat capacity heat sink. The following information is given:
   Heat source: fluid=air, T_5=1500 K, p_5=1 bar, T_6=650 K, and p_6=1 bar
   Heat sink: fluid=air, T_7=290 K, p_7=1 bar, T_8=400 K, and p_8=1 bar
   Steam cycle: fluid=water, x_2=0, T_3=450 K, x_3=1, T_4=420 K, and mdot=1 kg/s.
   Determine the rate of heat added from the heat source, rate of heat removed to the heat sink, power required by the isentropic pump, power produced by the isentropic turbine, net power produced and efficiency of the cycle.
   ANSWER: rate of heat added from the heat source=2026 kW, rate of heat removed to the heat sink=-1891 kW, power required by the isentropic pump=-4.99 kW, power produced by the isentropic turbine=140.0 kW, net power produced=135.0 kW and efficiency of the cycle=6.67%.
2. An endo-reversible (Curzon and Ahlborn) steam cycle operates between a finite heat capacity heat source and a finite heat capacity heat sink. The following information is given:
   Heat source: fluid=air, T_5=1500 K, p_5=1 bar, T_6=650 K, and p_6=1 bar
   Heat sink: fluid=air, T_7=290 K, p_7=1 bar, T_8=400 K, and p_8=1 bar
   Steam cycle: fluid=water, x_2=0, T_3=480 K, x_3=1, T_4=410 K, and mdot=1 kg/s.
   Determine the rate of heat added from the heat source, rate of heat removed to the heat sink, power required by the isentropic pump, power produced by the isentropic turbine, net power produced and efficiency of the cycle.
   ANSWER: rate of heat added from the heat source=1913 kW, rate of heat removed to the heat sink=-1634 kW, power required by the isentropic pump=-25.32 kW, power produced by the isentropic turbine=304.3 kW, net power produced=278.9 kW and efficiency of the cycle=14.58%.

3. An endo-reversible (Curzon and Ahlborn) steam cycle operates between a finite heat capacity heat source and a finite heat capacity heat sink. The following information is given:
   Heat source: fluid=air, T_5=1500 K, p_5=1 bar, T_6=650 K, and p_6=1 bar
   Heat sink: fluid=air, T_7=290 K, p_7=1 bar, T_8=400 K, and p_8=1 bar
   Steam cycle: fluid=water, x_2=0, T_4=480 K, x_3=1, T_4=420 K, and mdot=1 kg/s.
   Determine the maximum net power produced and working fluid temperature at the inlet of the turbine with fixed condenser temperature.
   ANSWER: maximum net power is about 401.2 kW and T_3 is about 564.3 K.

13.6. Finite Time Rankine Cycle with Infinitely Large Heat Reservoirs

The ideal *Finite time Rankine cycle* and its T-s diagram are shown in Figure 13.6.1 and Figure 13.6.2. The cycle is an endo-reversible cycle which is made of two isentropic processes and two isobaric heat transfer processes. The cycle exchanges heats with its surroundings in the two isobaric external irreversible heat transfer processes. The heat source and heat sink are infinitely large. Therefore, the temperature of the heat source and heat sink are unchanged during the heat transfer processes.

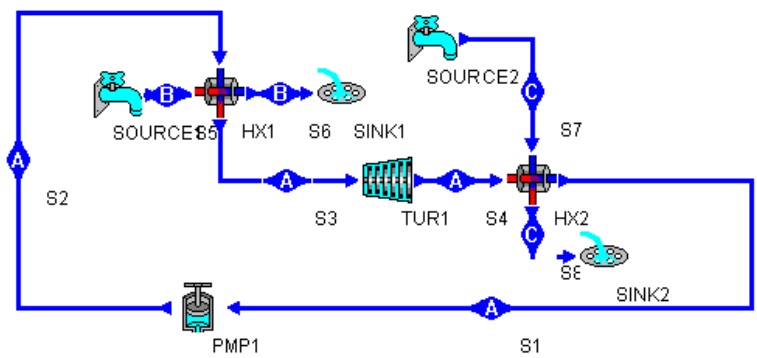

Figure 13.6.1. Finite time ideal Rankine cycle with infinitely large heat reservoirs.

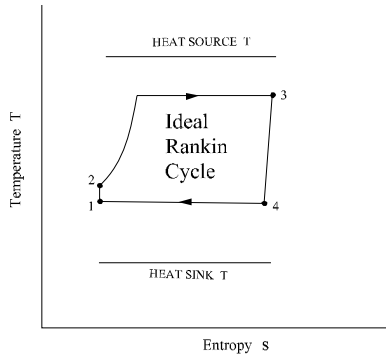

Figure 13.6.2. Finite-time ideal Rankine cycle T-s diagram.

Assume that the working fluid flows through the heat engine in a steady-state fashion. The rates of heat rejection and addition of the heat engine are:

$$Qdot_H=U_H A_H LMTD_H \tag{13.6.1}$$

$$Qdot_L=U_L A_L LMTD_L \tag{13.6.2}$$

where U_H is the heat transfer coefficient and A_H is the heat transfer surface area of the high-temperature side heat exchanger between the heat engine and the heat source; U_L is the heat transfer coefficient and A_L is the heat transfer surface area of the low-temperature side heat exchanger between the heat engine and the heat sink.

The total heat transfer surface area (A) of the two heat exchangers is assumed to be a constant.

$$A=A_H+A_L \tag{13.6.3}$$

The power output (P) of the heat engine according to the first law of thermodynamics is

$$P=Qdot_H-Qdot_L \tag{13.6.4}$$

The efficiency (0) of the heat engine is

$$0=P/Qdot_H \tag{13.6.5}$$

Example 13.6.1.

An endo-reversible Rankine steam heat engine with its infinitely large steam heat source and heat sink is shown in Figure 13.6.1. The following information is given:

p_1=1 bar, x_1=0, $mdot_1$=1 kg/s, p_3=100 bar, x_3=1, p_5=200 bar, x_5=1, p_6=200 bar, x_6=0, p_5=639 K, x_5=1, T_6=639 K, x_6=0, p_7=0.02 bar, x_7=0, p_8=0.02 bar, and x_8=1.

Determine the power required by the pump, power produced by the turbine, net power produced by the cycle, rate of heat added by the heat source, rate of heat removed to the heat sink, and cycle efficiency. Optimize the net power produced by the cycle with fix p_1. Draw the sensitivity diagram of net power vs p_3. Find the maximum net power and p_3 at the maximum net power condition.

To solve this problem by CyclePad, we take the following steps:

1. Build the cycle and its surroundings as shown in Figure 13.6.1.
2. Analysis: (A) Assuming the heat exchangers are isobaric, and turbine and pump are isentropic. (B) Input Heat source fluid=steam, T_5=639 K, x_5=1, T_6=639 K, and x_6=0; Heat sink: fluid=steam, p_7=0.02 bar, x_7=0, p_7=0.02 bar, p_8=0.02 bar, and x_8=1; Steam cycle: fluid=water, x_1=0, p_1=1 bar, x_3=1, p_3=200 bar, and mdot=1 kg/s.
3. Display results: The results shown in Figure E13.6.1a are: rate of heat added from the heat source=2297 kW, rate of heat removed to the heat sink=-1507 kW, power required by the isentropic pump=-10.30 kW, power produced by the isentropic turbine=699.9 kW, net power produced=689.6 kW and efficiency of the cycle=30.02%.
4. Optimization

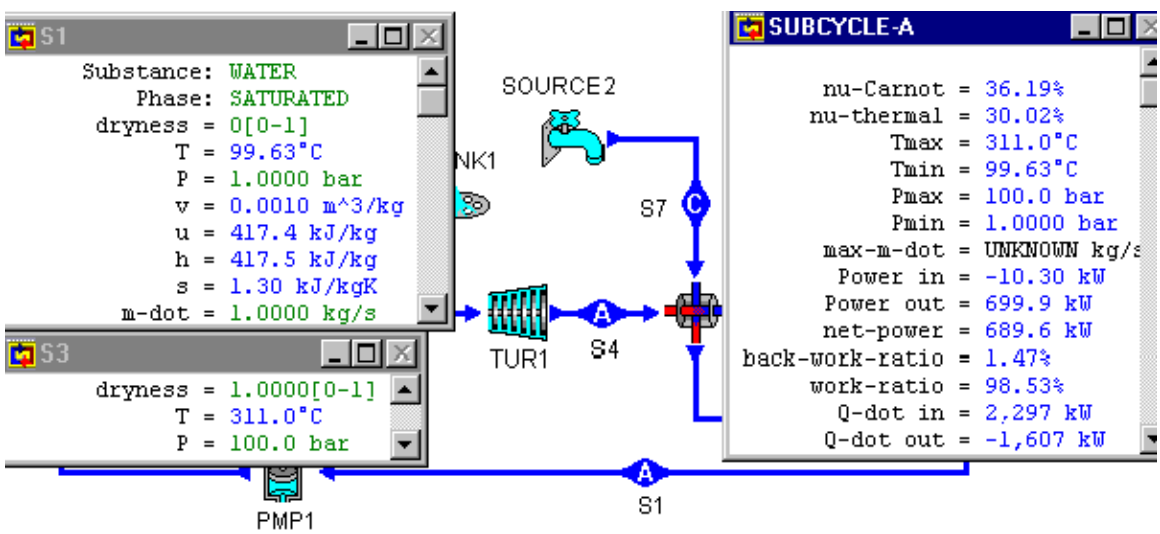

Figure Example 13.6.1a Finite time ideal Rankine cycle with infinitely large heat reservoirs

Draw the sensitivity diagram of net power versus p_3 as shown in Figure E13.6.1b. The maximum net power is about 692.4 kW, and p_3 at the maximum net power condition is about 116.1 bar with fixed condenser pressure.

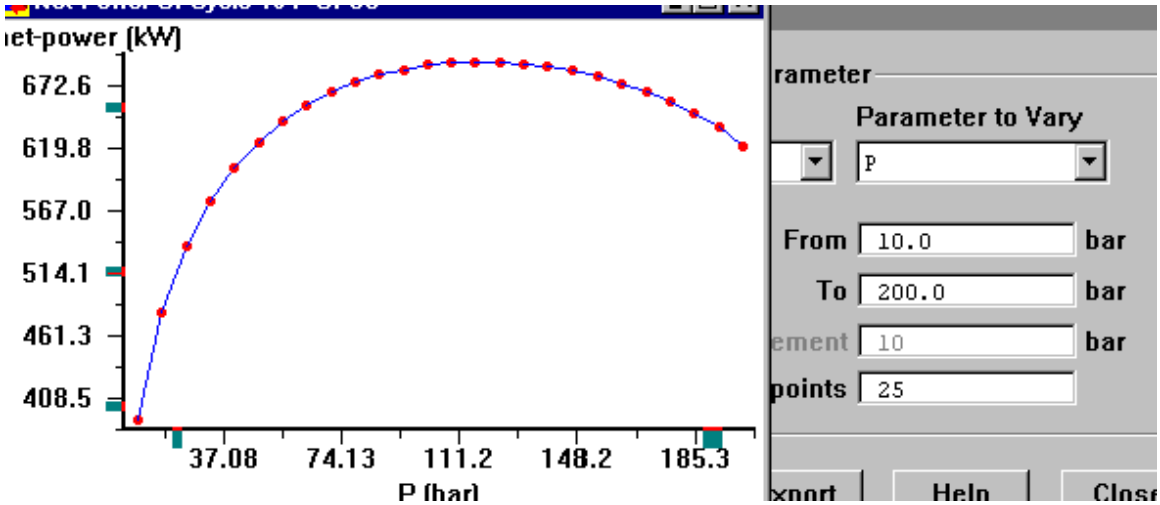

Figure E13.6.1b Finite time ideal Rankine cycle with infinite largely heat reservoirs sensitivity diagram

Comment: The partial optimization is only for M(net power)/M(p_3)=0. To have the full optimization, we must let M(net power)/M(p_1)=0 also.

Homework 13.6. Finite Time Ideal Rankine Cycle with Infinitely Large Heat Reservoirs

1. An endo-reversible Rankine steam heat engine with its infinitely large steam heat source and heat sink is shown in Figure 13.6.1. The following information is given: p_1=0.1 bar, x_1=0, mdot$_1$=1 kg/s, p_3=120 bar, x_3=1, p_5=200 bar, x_5=1, p_6=200 bar, x_6=0, p_5=639 K, x_5=1, T_6=639 K, x_6=0, p_7=0.02 bar, x_7=0, p_8=0.02 bar, and x_8=1.
   Determine the power required by the pump, power produced by the turbine, net power produced by the cycle, rate of heat added by the heat source, rate of heat removed to the heat sink, and cycle efficiency.
   Optimize the net power produced by the cycle with fix p_1. Draw the sensitivity diagram of net power vs p_3. Find the maximum net power and p_3 at the maximum net power condition.
   ANSWER: power required by the pump=-12.13 kW, power produced by the turbine=948.0 kW, net power produced by the cycle=935.9 kW, rate of heat added by the heat source=2481 kW, rate of heat removed to the heat sink=-1545 kW, and cycle efficiency=37.73%.
2. An endo-reversible Rankine steam heat engine with its infinitely large steam heat source and heat sink is shown in Figure 13.6.1. The following information is given: p_1=0.1 bar, x_1=0, mdot$_1$=1 kg/s, p_3=150 bar, x_3=1, p_5=200 bar, x_5=1, p_6=200 bar, x_6=0, p_5=639 K, x_5=1, T_6=639 K, x_6=0, p_7=0.02 bar, x_7=0, p_8=0.02 bar, and x_8=1.
   Determine the power required by the pump, power produced by the turbine, net power produced by the cycle, rate of heat added by the heat source, rate of heat removed to the heat sink, and cycle efficiency.

Optimize the net power produced by the cycle with fix p_1. Draw the sensitivity diagram of net power vs p_3. Find the maximum net power and p_3 at the maximum net power condition.

ANSWER: power required by the pump=-15.5 kW, power produced by the turbine=699.0 kW, net power produced by the cycle=683.5 kW, rate of heat added by the heat source=2177 kW, rate of heat removed to the heat sink=-1494 kW, and cycle efficiency=31.40%.

13.7. ACTUAL RANKINE CYCLE WITH INFINITELY LARGE HEAT RESERVOIRS

The actual Finite time Rankine cycle is shown in Figure 13.7.1. The cycle is an external and internal irreversible cycle which is made of two irreversible internal adiabatic processes (pump and turbine) and two irreversible external isobaric heat transfer processes. The heat source and heat sink are infinitely large.

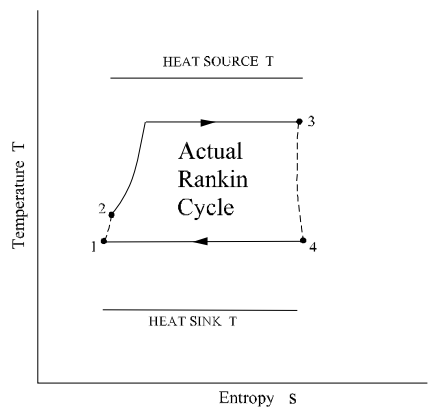

Figure 13.7.1. Finite time actual Rankine cycle with infinitely large heat reservoirs.

Example 13.7.1.

An endo-reversible Rankine steam heat engine with its infinitely large steam heat source and heat sink is shown in Figure 13.7.1. The following information is given:

$0_{turbine}$=85%, 0_{pump}=100%, p_1=1 bar, x_1=0, $mdot_1$=1 kg/s, p_3=100 bar, x_3=1, p_5=200 bar, x_5=1, p_6=200 bar, x_6=0, p_5=639 K, x_5=1, T_6=639 K, x_6=0, p_7=0.02 bar, x_7=0, p_8=0.02 bar, and x_8=1.

Determine the power required by the pump, power produced by the turbine, net power produced by the cycle, rate of heat added by the heat source, rate of heat removed to the heat sink, and cycle efficiency.

Optimize the net power produced by the cycle with fix p_1. Draw the sensitivity diagram of net power vs p_3. Find the maximum net power and p_3 at the maximum net power condition.

To solve this problem by CyclePad, we take the following steps:

1. Build the cycle and its surroundings as shown in Figure 13.7.1.
2. Analysis: (A) Assuming the heat exchangers are isobaric, and turbine and pump are isentropic. (B) Input Heat source fluid=steam, T_5=639 K, x_5=1, T_6=639 K, and x_6=0; Heat sink: fluid=steam, p_7=0.02 bar, x_7=0, p_7=0.02 bar, p_8=0.02 bar, and x_8=1; Steam cycle: fluid=water, x_1=0, p_1=1 bar, x_3=1, p_3=200 bar, and mdot=1 kg/s.
3. Display results: The results shown in Figure E13.7.1a are: rate of heat added from the heat source=2297 kW, rate of heat removed to the heat sink=-1712 kW, power required by the isentropic pump=-10.30 kW, power produced by the isentropic turbine=594.9 kW, net power produced=584.6 kW and efficiency of the cycle=25.45%.

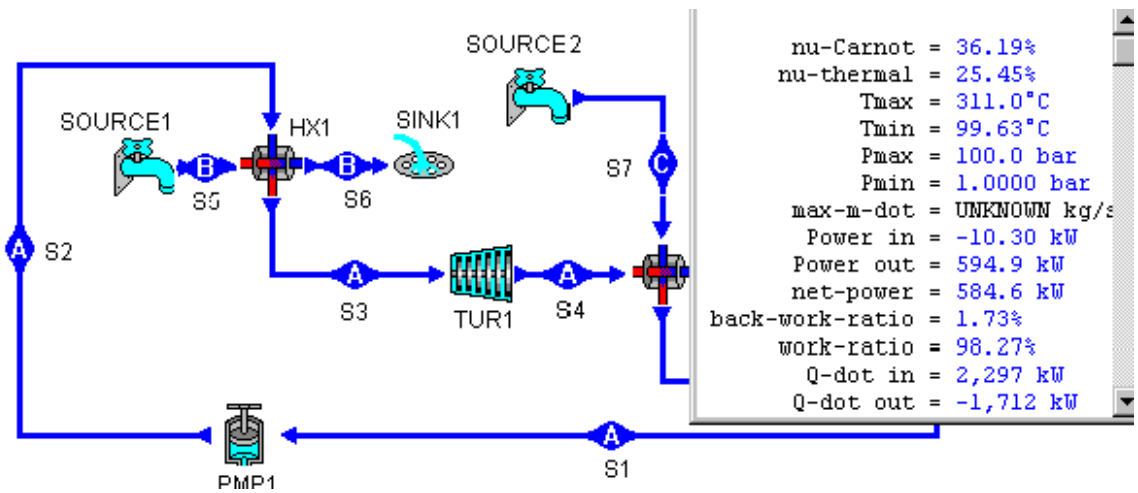

Figure E13.7.1a. Finite time actual Rankine cycle with infinitely large heat reservoirs.

4. Optimization

Draw the sensitivity diagram of net power versus p_3 as shown in Figure E13.7.1b. The maximum net power is about 586.2 kW, and p_3 at the maximum net power condition is about 107.4 kPa.

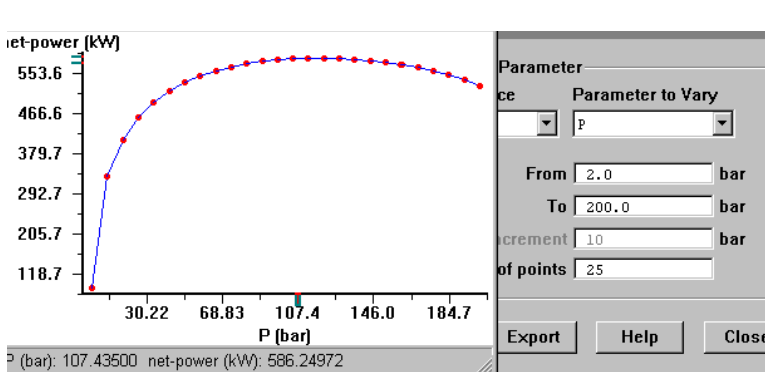

Figure E13.7.1b Finite time actual Rankine cycle with infinite largely heat reservoirs sensitivity diagram

Comment: The partial optimization is only for M(net power)/M(p_3)=0. To have the full optimization, we must let M(net power)/M(p_1)=0 also.

Homework 13.7 Finite Time Actual Rankine Cycle with Infinitely Large Heat Reservoirs

1. An endo-reversible Rankine steam heat engine with its infinitely large steam heat source and heat sink is shown in Figure 13.7.1. The following information is given:

   $0_{turbine}$=85%, 0_{pump}=100%, p_1=1 bar, x_1=0, $mdot_1$=1 kg/s, p_3=150 bar, x_3=1, p_5=150 bar, x_5=1, p_6=200 bar, x_6=0, p_5=639 K, x_5=1, T_6=639 K, x_6=0, p_7=0.02 bar, x_7=0, p_8=0.02 bar, and x_8=1.

   Determine the power required by the pump, power produced by the turbine, net power produced by the cycle, rate of heat added by the heat source, rate of heat removed to the heat sink, and cycle efficiency.

   ANSWER: power required by the pump=-15.5 kW, power produced by the turbine=594.2 kW, net power produced by the cycle=578.7 kW, rate of heat added by the heat source=2177 kW, rate of heat removed to the heat sink=-1598 kW, and cycle efficiency=26.58%.
2. An endo-reversible Rankine steam heat engine with its infinitely large steam heat source and heat sink is shown in Figure 13.7.1. The following information is given:

   $0_{turbine}$=85%, 0_{pump}=100%, p_1=0.5 bar, x_1=0, $mdot_1$=1 kg/s, p_3=100 bar, x_3=1, p_5=150 bar, x_5=1, p_6=200 bar, x_6=0, p_5=639 K, x_5=1, T_6=639 K, x_6=0, p_7=0.02 bar, x_7=0, p_8=0.02 bar, and x_8=1.

   Determine the power required by the pump, power produced by the turbine, net power produced by the cycle, rate of heat added by the heat source, rate of heat removed to the heat sink, and cycle efficiency.

   Optimize the net power produced by the cycle with fix p_1. Draw the sensitivity diagram of net power vs p_3. Find the maximum net power and p_3 at the maximum net power condition.

   ANSWER: power required by the pump=-10.27 kW, power produced by the turbine=663.6 kW, net power produced by the cycle=653.3 kW, rate of heat added by the heat source=2374 kW, rate of heat removed to the heat sink=-1720 kW, and cycle efficiency=27.52%; maximum net power=approximately 653.7 kW and p_3=102.3 bar at the maximum net power condition

13.8. IDEAL RANKINE CYCLE WITH FINITE CAPACITY HEAT RESERVOIRS

The ideal *Finite time Rankine cycle* is shown in Figure 13.8.1. The cycle is an endo-reversible cycle which is made of two isentropic processes and two isobaric heat transfer processes. The cycle exchanges heats with its surroundings in the two isobaric external irreversible heat transfer processes. The heat source and heat sink are not infinitely large.

Therefore, the temperature of the heat source and heat sink are unchanged during the heat transfer processes.

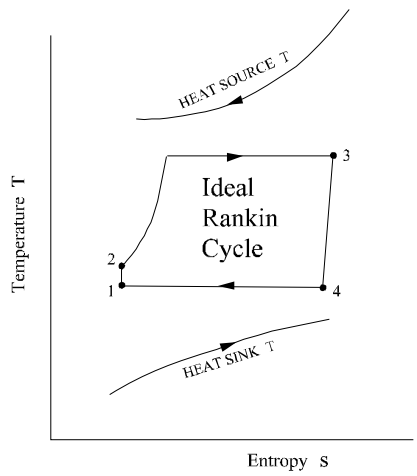

Figure 13.8.1. Finite time ideal Rankine cycle with finite heat reservoirs.

Example 13.8.1.

A finite time ideal Rankine cycle operates between a finite heat capacity heat source and a finite heat capacity heat sink. The following information is given:

Heat source: fluid=air, T_5=2000EC, p_5=1 bar, T_6=800EC, and p_6=1 bar
Heat sink: fluid=water, T_7=17EC, p_7=1 bar, T_8=30EC, and p_8=1 bar
Steam cycle: fluid=water, x_2=0, p_3=150 bar, x_3=1, p_4=1 bar, and mdot=1 kg/s.

Determine the rate of heat added from the heat source, rate of heat removed to the heat sink, power required by the isentropic pump, power produced by the isentropic turbine, net power produced and efficiency of the cycle. Optimize the net power produced by the cycle with fix p_1. Draw the sensitivity diagram of net power vs p_3. Find the maximum net power and p_3 at the maximum net power condition.

To solve this problem by CyclePad, we take the following steps:

1. Build the cycle and its surroundings as shown in Figure 13.6.1.
2. Analysis: (A) Assuming the heat exchangers are isobaric, and turbine and pump are isentropic. (B) Input heat source fluid=air, T_5=2000EC, p_5=1 bar, T_6=800EC, and p_6=1 bar; Heat sink: fluid=water, T_7=17EC, p_7=1 bar, T_8=EC, and p_8=1 bar; and steam cycle: fluid=water, x_2=0, p_3=150 bar, x_3=1, p_4=1 bar, and mdot=1 kg/s.
3. Display results: The results are: rate of heat added from the heat source=2177 kW, rate of heat removed to the heat sink=-1494 kW, power required by the isentropic pump=-15.5 kW, power produced by the isentropic turbine=699.0 kW, net power produced=683.5 kW and efficiency of the cycle=31.40%.

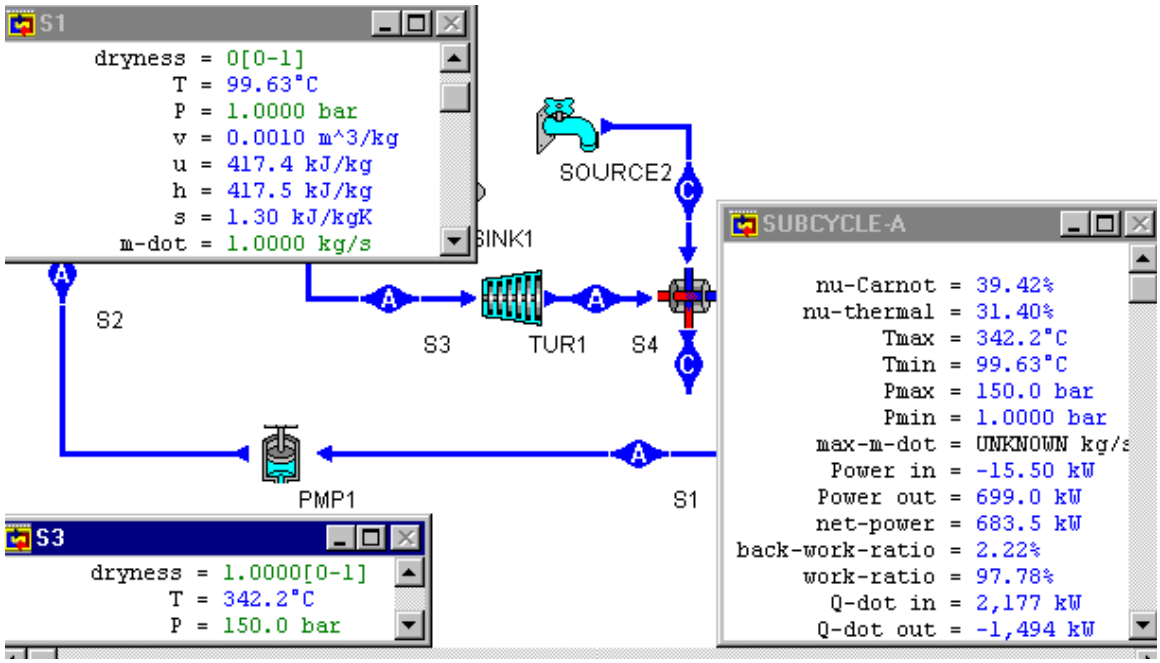

Figure E13.8.1a. Finite time ideal Rankine cycle with finite capacity heat reservoirs.

4. Optimization

Draw the sensitivity diagram of net power versus p_3 as shown in Figure E13.8.1b. The maximum net power is about 695.5 kW, and p_3 at the maximum net power condition is about 103.6 bar.

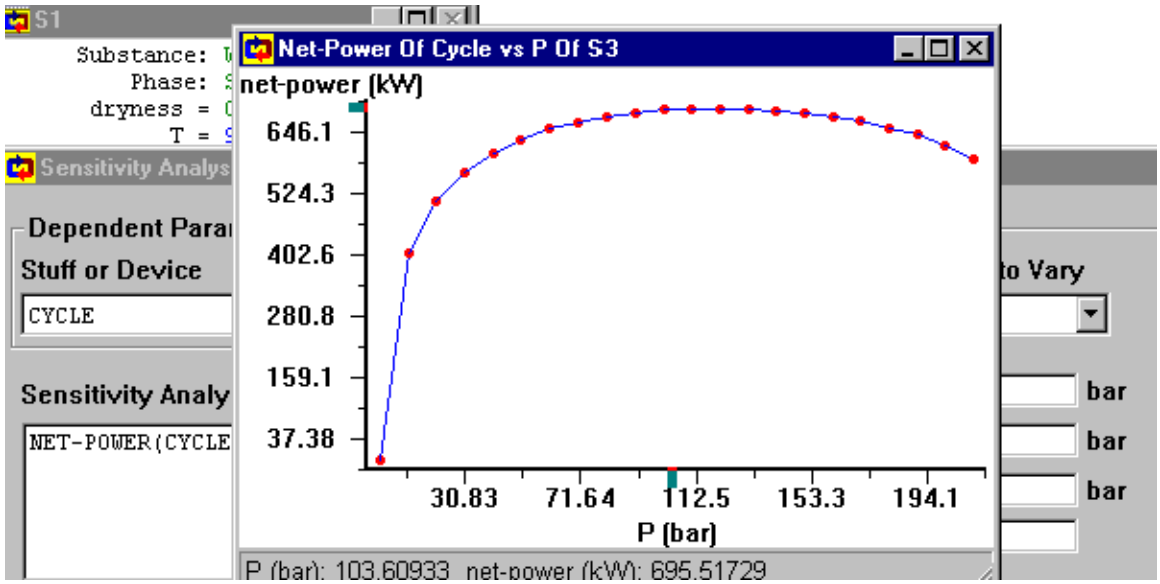

Figure E13.8.1b. Finite time ideal Rankine cycle with finite heat reservoirs sensitivity diagram.

Comment: The partial optimization is only for M(net power)/M(p_3)=0. To have the full optimization, we must let M(net power)/M(p_1)=0 also.

Example 13.8.2.

A finite time ideal Rankine cycle operates between a finite heat capacity heat source and a finite heat capacity heat sink. The following information is given:

Heat source: fluid=water, p_5=200 bar, x_5=1 bar, x_6=0, and p_6=200 bar,
Heat sink: fluid=water, x_7=0, p_7=0.02 bar, x_8=1, and p_8=0.02 bar,
Steam cycle: fluid=water, x_1=0, p_1=1 bar, x_3=1, p_3=117.6 bar, and mdot=1 kg/s,
Heat exchangers are counter-flow type.

Determine the rate of heat added from the heat source, rate of heat removed to the heat sink, power required by the isentropic pump, power produced by the isentropic turbine, net power produced and efficiency of the cycle.

Optimize the net power produced by the cycle with variable p_3 based on the criterion of (A) net power per unit conductance of heat exchanger, and (B) specific net power per unit surface area of heat exchangers with U_H=U_H=0.5 kW/[m^2(K)].

To solve this problem by CyclePad, we take the following steps:

1. Build the cycle and its surroundings as shown in Figure 13.8.1.
2. Analysis: (A) Assuming the heat exchangers are isobaric, and turbine and pump are isentropic. (B) Input Heat source fluid=water, p_5=200 bar, x_5=1 bar, x_6=0, and p_6=200 bar; Heat sink: fluid=water, x_7=0, p_7=0.02 bar, x_8=1, and p_8=0.02 bar; Heat

exchangers are counter-flow type; and Steam cycle: fluid=water, x_1=0, p_1=1 bar, x_3=1, p_3=117.6 bar, and mdot=1 kg/s as shown in Figure E13.8.2a.

3. Display results: The results are: rate of heat added from the heat source ($Qdot_H$)=2260 kW, logarithm mean temperature difference of the high-temperature side heat exchanger ($LMTD_H$)=121.8EC, rate of heat removed to the heat sink ($Qdot_L$)=-1567 kW, logarithm mean temperature difference of the low-temperature side heat exchanger ($LMTD_L$)=82.13EC, net power produced=693.0 kW and efficiency of the cycle=30.66%.

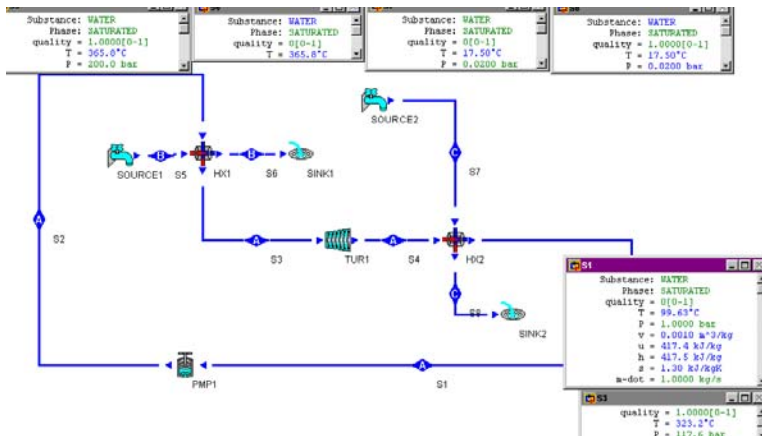

Figure E13.8.2a. Finite time ideal Rankine cycle with finite heat capacity source and sink input.

The conductances of the heat exchanger are U_HA_H=2260/121.8=18.56 kW/K and U_LA_L=1567/82.13= 19.08 kW/K. The total conductances of the heat exchanger is 18.56+19.08=37.64 kW/K. The net power output per unit conductance of heat exchanger is 693.0/37.64=18.41 kW/K.

The surface areas of the heat exchanger are A_H=18.56/0.5=37.12 m^2 and A_L=19.08/0.5=38.16 m^2. The total surface areas of the heat exchanger is 37.12+38.16=75.28 m^2. The specific power per unit total surface areas of the heat exchanger is 693.0/75.28=9.206 m^2.

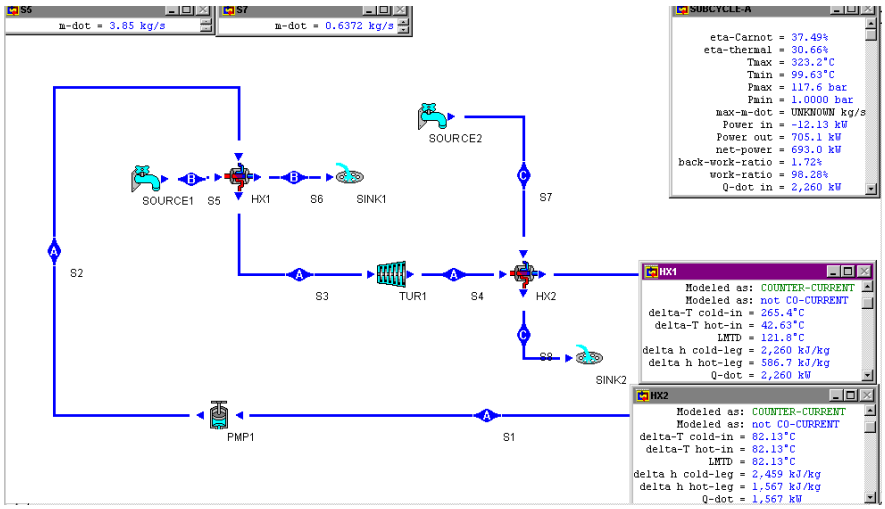

Figure E13.8.2b. Finite time ideal Rankine cycle with finite heat capacity source and sink output.

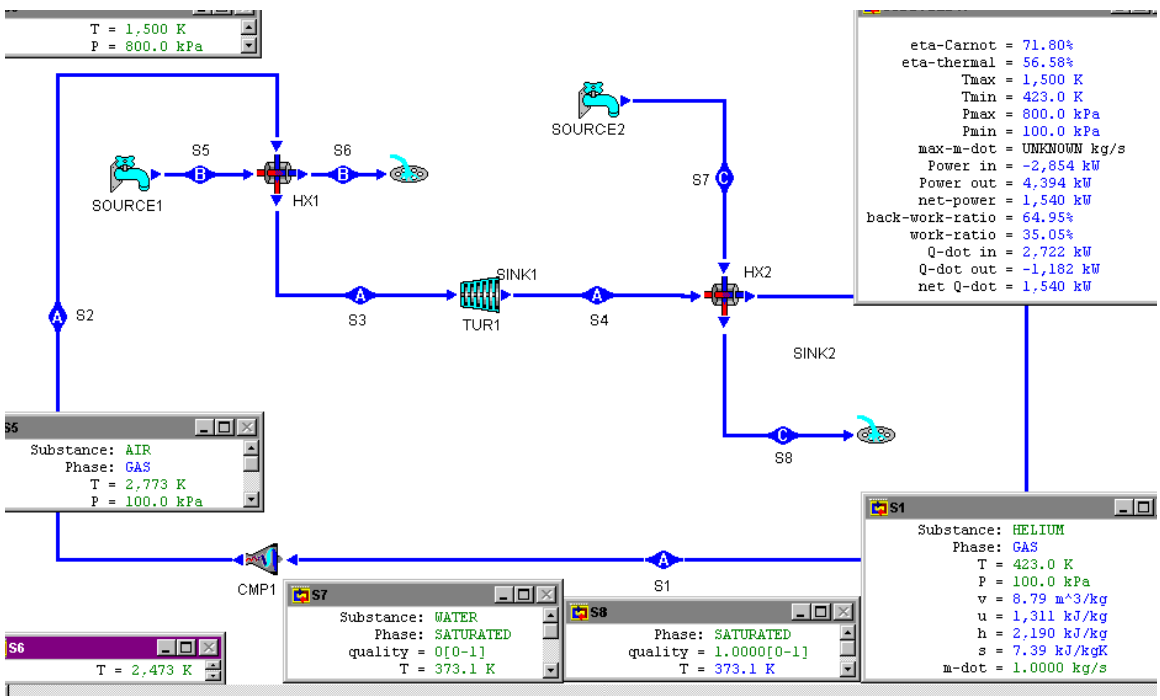

Figure E13.8.2c. Net power per unit conductance of heat exchangers.

Using p_3 as a design parameter, Table E13.8.2 is made. Based on the criterion of (A) net power per unit conductance of heat exchanger, the optimization p_3=120 bar, and (B) specific net power per unit surface area of heat exchanger, the optimization p_3=80 bar.

Example 13.8.3.

A finite time ideal Rankine OTEC (Ocean thermal energy conversion) cycle as shown in Figure E13.8.3a operates between a finite heat capacity heat source and a finite heat capacity heat sink. The following information is given:

Table E13.8.2 Net power per unit conductance of heat exchanger

p3	LMTDH	LMTDL	QDOTH	QDOTL	UHAH	ULAL	SUM(UA)	PNET	sppnet	
bar	K	K	kW	kW	kW/K	kW/K	kW/K	kW	kW/(kW/K)	
2	254.4	82.13	2277	2171	8.950472	26.4337	35.38417	105.6	2.984385	
10	223.6	82.13	2359	1969	10.55009	23.97419	34.52428	389.8	11.29061	
30	191.2	82.13	2383	1820	12.46339	22.15999	34.62338	562.6	16.24914	
50	170.9	82.13	2371	1741	13.87361	21.1981	35.07171	630.3	17.97175	
80	147.3	82.13	2332	1655	15.83164	20.15098	35.98262	676.8	**18.80908**	**MAXsppnet**
100	133.5	82.13	2297	1607	17.20599	19.56654	36.77253	689.6	18.75313	
110	126.8	82.13	2277	1584	17.95741	19.2865	37.24391	692.3	18.58827	
120	120.2	82.13	2255	1562	18.7604	19.01863	37.77903	**693**	18.34351	**MAXPNET**
130	113.6	82.13	2231	1539	19.63908	18.73859	38.37767	691.7	18.0235	
150	99.86	82.13	2177	1494	21.80052	18.19067	39.99119	683.5	17.09126	
180	75.15	82.13	2073	1418	27.58483	17.26531	44.85014	656	14.62649	

Heat source: fluid=warm ocean surface water, T_1=26EC, p_1=101 kPa, T_2=22EC, and p_2= 101 kPa

Heat sink: fluid=cold deep ocean water, T_3=5EC, p_3=101 kPa, T_4=9EC, and p_4=101 kPa,

Steam cycle: fluid=ammonia, x_5=0, T_5=12EC, x_7=1, T_7=20EC, and mdot=1 kg/s.

The heat exchangers are counter-flow type, U_H=0.4 kJ/(m^2)K and U_L=0.4 kJ/(m^2)K.

Determine the rate of heat added from the heat source, rate of heat removed to the heat sink, power required by the isentropic pump, power produced by the isentropic turbine, net power produced and efficiency of the cycle. Since the fuel cost of the OTEC is free, the primary cost is the initial construction cost. The heat exchangers are the major concern of the initial construction cost. Let us take the specific net power output (net output power per unit total heat exchanger surface area) as the design objective function, optimize the warm-side (heater or high-temperature-side heat exchanger) and cold-side (cooler or low-temperature-side heat exchanger) working fluid temperatures.

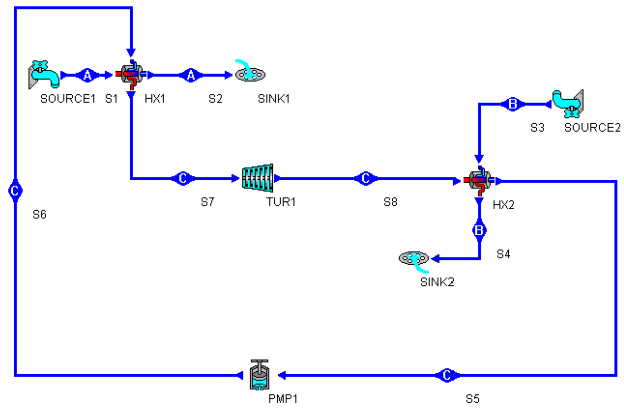

Figure E13.8.3a. Finite-time OTEC cycle.

To solve this problem by CyclePad, we take the following steps:

1. Build the cycle and its surroundings as shown in Figure E13.8.3a.
2. Analysis: (A) Assuming the heat exchangers are isobaric and counter-flow type, and turbine and pump are isentropic. (B) Input Heat source: fluid=warm ocean surface water, T_1=26EC, p_1=101 kPa, T_2=22EC, and p_2= 101 kPa Heat sink: fluid=cold deep ocean water, T_3=5EC, p_3=101 kPa, T_4=9EC, and p_4=101 kPa, Steam cycle: fluid=ammonia, x_5=0, T_5=12EC, x_7=1, T_7=20EC, and mdot=1 kg/s.
3. Display results: The results shown in Figure E13.8.3b are: $LMTD_H$=7.56 K, $LMTD_L$=4.72 K, rate of heat added from the heat source=1219 kW, rate of heat removed to the heat sink=-1191 kW, power required by the isentropic pump=-4.38 kW, power produced by the isentropic turbine=33.20 kW, net power produced=28.82 kW and efficiency of the cycle=2.36%.
4. Calculate $U_HA_H=Q_H/LMTD_H$=1219/7.56=161.2 kW/K, $U_LA_L=Q_L/LMTD_L$=1191/4.72 =252.3 kW/K, $U_HA_H+U_LA_L$=161.2+252.3=413.5 kW/K, and specific net power output=$Wdot_{net}/(A_H+A_L)$= 8.82/(161.2/0.4+252.3/0.4)=0.1742 kW/m^2.

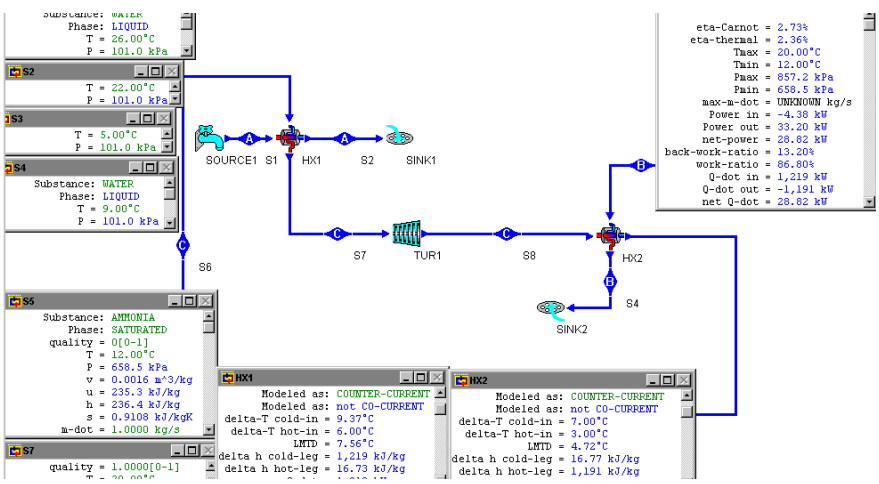

Figure E13.8.3b. Finite-time OTEC cycle input and output.

5. To optimize the specific power output of the cycle, we let M(specific power output)/MT_7=0 first and then M(specific power output)/MT_7=0 as shown in the following two tables.

It is seen that M(specific power output)/MT_7=0 occurs at T_7=24EC as shown in Table E13.8.3a.

Table E13.8.3a Specific power optimization with respect to T_7

OTEC	T1=26	T2=22	T3=5	T4=9		COUNTER FLOW HX							
12	12.1	0.001028	0.001285	0.0304	-0.0561	0.4267	0.3706	1217	-1217	11.84	4.72	102.7872	257.839
12	14	0.020189	0.025236	0.611	-1.09	8.53	7.44	1218	-1211	10.88	4.72	111.9485	256.5678
12	16	0.038816	0.04852	1.21	-2.21	16.92	14.71	1219	-1204	9.84	4.72	123.8821	255.0847
12	18	0.055613	0.069516	1.79	-3.28	25.14	21.86	1219	-1197	8.74	4.72	139.4737	253.6017
12	20	0.069685	0.087107	2.36	-4.38	33.2	28.82	1219	-1191	7.56	4.72	161.2434	252.3305
12	21.9	0.07957	0.099463	2.9	-5.42	40.73	35.32	1220	-1184	6.32	4.72	193.038	250.8475
12	22	0.079947	0.099933	2.92	-5.47	41.13	35.66	1220	-1184	6.25	4.72	195.2	250.8475
12	23	0.082671	0.103339	3.2	-6.03	45.02	38.99	1220	-1181	5.51	4.72	221.4156	250.2119
12	**24**	**0.082867**	**0.103584**	**3.47**	**-6.58**	**48.91**	**42.33**	**1220**	**-1178**	**4.67**	**4.72**	**261.242**	**249.5763**
12	24.5	0.081377	0.101722	3.6	-6.86	50.83	43.97	1220	-1176	4.19	4.72	291.1695	249.1525
12	24.6	0.080922	0.101152	3.63	-6.91	51.21	44.3	1220	-1176	4.09	4.72	298.2885	249.1525
12	24.7	0.080328	0.10041	3.66	-6.97	51.59	44.62	1220	-1175	3.98	4.72	306.5327	248.9407
12	24.8	0.079672	0.09959	3.68	-7.02	51.97	44.95	1220	-1175	3.87	4.72	315.2455	248.9407

6. Then let M(specific power output)/MT_5=0

It is seen that M(specific power output)/MT_5=0 occurs at T_5=12EC as shown in Table E13.8.3b.

Table E13.8.3b Specific power optimization with respect to T_5

OTEC	T1=26	T2=22	T3=5	T4=9		COUNTER FLOW HX							
12	12.1	0.001028	0.001285	0.0304	-0.0561	0.4267	0.3706	1217	-1217	11.84	4.72	102.7872	257.839
12	14	0.020189	0.025236	0.611	-1.09	8.53	7.44	1218	-1211	10.88	4.72	111.9485	256.5678
12	16	0.038816	0.04852	1.21	-2.21	16.92	14.71	1219	-1204	9.84	4.72	123.8821	255.0847
12	18	0.055613	0.069516	1.79	-3.28	25.14	21.86	1219	-1197	8.74	4.72	139.4737	253.6017
12	20	0.069685	0.087107	2.36	-4.38	33.2	28.82	1219	-1191	7.56	4.72	161.2434	252.3305
12	21.9	0.07957	0.099463	2.9	-5.42	40.73	35.32	1220	-1184	6.32	4.72	193.038	250.8475
12	22	0.079947	0.099933	2.92	-5.47	41.13	35.66	1220	-1184	6.25	4.72	195.2	250.8475
12	23	0.082671	0.103339	3.2	-6.03	45.02	38.99	1220	-1181	5.51	4.72	221.4156	250.2119
12	**24**	**0.082867**	**0.103584**	**3.47**	**-6.58**	**48.91**	**42.33**	**1220**	**-1178**	**4.67**	**4.72**	**261.242**	**249.5763**
12	24.5	0.081377	0.101722	3.6	-6.86	50.83	43.97	1220	-1176	4.19	4.72	291.1695	249.1525
12	24.6	0.080922	0.101152	3.63	-6.91	51.21	44.3	1220	-1176	4.09	4.72	298.2885	249.1525
12	24.7	0.080328	0.10041	3.66	-6.97	51.59	44.62	1220	-1175	3.98	4.72	306.5327	248.9407
12	24.8	0.079672	0.09959	3.68	-7.02	51.97	44.95	1220	-1175	3.87	4.72	315.2455	248.9407
9.1	24	0.040529	0.050661	4.32	-7.8	61.09	53.29	1232	-1179	5.52	1.08	223.1884	1091.667
9.5	24	0.059103	0.073878	4.21	-7.64	59.4	51.76	1231	-1179	5.4	1.82	227.963	647.8022
10	24	0.0705	0.088125	4.06	-7.44	57.28	49.84	1228	-1179	5.26	2.49	233.4601	473.494
11	24	0.080891	0.101114	3.77	-7.01	53.11	46.1	1224	-1178	4.97	3.64	246.2777	323.6264
12	**24**	**0.082867**	**0.103584**	**3.47**	**-6.58**	**48.91**	**42.33**	**1220**	**-1178**	**4.67**	**4.72**	**261.242**	**249.5763**
15	24	0.066312	0.082889	2.6	-5.14	36.5	31.36	1207	-1176	3.74	7.83	322.7273	150.1916
18	24	0.037198	0.046497	1.72	-3.59	24.18	20.6	1195	-1174	2.68	10.88	445.8955	107.9044
20	24	0.018341	0.022927	1.15	-2.45	16.08	13.62	1186	-1173	1.82	12.9	651.6484	90.93023
21	24	0.010039	0.012549	0.8623	-1.86	12.05	10.19	1182	-1172	1.27	13.9	930.7087	84.31655
21.5	24	0.005931	0.007414	0.7177	-1.57	10.03	8.47	1180	-1171	0.8762	14.41	1346.724	81.26301

7. Let T_5=12EC and T_7=24EC, the optimized specific power output of the cycle is 0.1036 kW/m^2. At the maximum optimized specific power output condition, $LMTD_H$=4.67 K, $LMTD_H$=4.72 K, rate of heat added from the heat source=1220 kW, rate of heat removed to the heat sink=-1178 kW, power required by the isentropic pump=-6.58 kW, power produced by the isentropic turbine=48.91 kW, net power produced=42.33 kW and efficiency of the cycle=3.47% as shown in Figure E13.8.3c.

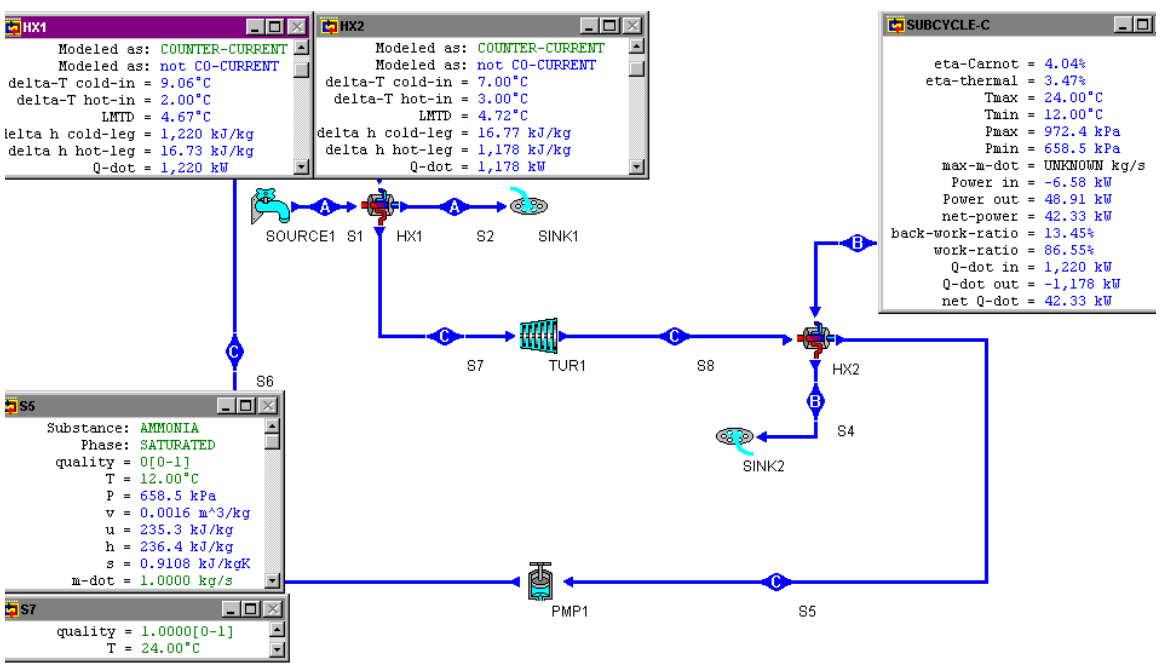

Figure E13.8.3c. Finite-time OTEC cycle optimization.

Homework 13.8. Finite Time Ideal Rankine Cycle with Finite Heat Capacity Reservoirs

1. An endo-reversible (Curzon and Ahlborn) steam cycle operates between a finite heat capacity heat source and a finite heat capacity heat sink. The following information is given:

   Heat source: fluid=air, T_5=2000EC, p_5=1 bar, T_6=800EC, and p_6=1 bar

   Heat sink: fluid=water, T_7=17EC, p_7=1 bar, T_8=EC, and p_8=1 bar

   Steam cycle: fluid=water, x_2=0, p_3=200 bar, x_3=1, p_4=1 bar, and mdot=1 kg/s.

   Determine the rate of heat added from the heat source, rate of heat removed to the heat sink, power required by the isentropic pump, power produced by the isentropic turbine, net power produced and efficiency of the cycle.

   ANSWER: rate of heat added from the heat source=1975 kW, rate of heat removed to the heat sink=-1353 kW, power required by the isentropic pump=-20.68 kW, power produced by the isentropic turbine=642.7 kW, net power produced=622.0 kW and efficiency of the cycle=31.49%.
2. An endo-reversible (Curzon and Ahlborn) steam cycle operates between a finite heat capacity heat source and a finite heat capacity heat sink. The following information is given:

   Heat source: fluid=air, T_5=2000EC, p_5=1 bar, T_6=800EC, and p_6=1 bar

   Heat sink: fluid=water, T_7=17EC, p_7=1 bar, T_8=EC, and p_8=1 bar

   Steam cycle: fluid=water, x_2=0, p_3=200 bar, x_3=1, p_4=0.2 bar, and mdot=1 kg/s.

   Determine the rate of heat added from the heat source, rate of heat removed to the heat sink, power required by the isentropic pump, power produced by the isentropic turbine, net power produced and efficiency of the cycle.

   ANSWER: rate of heat added from the heat source=2141 kW, rate of heat removed to the heat sink=-1366 kW, power required by the isentropic pump=-20.25 kW, power produced by the isentropic turbine=795.5 kW, net power produced=775.2 kW and efficiency of the cycle=36.20%.
3. An endo-reversible (Curzon and Ahlborn) steam cycle operates between a finite heat capacity heat source and a finite heat capacity heat sink. The following information is given:

   Heat source: fluid=air, T_5=2000EC, p_5=1 bar, T_6=800EC, and p_6=1 bar

   Heat sink: fluid=water, T_7=17EC, p_7=1 bar, T_8=EC, and p_8=1 bar

   Steam cycle: fluid=water, x_2=0, p_3=200 bar, x_3=1, p_4=0.2 bar, and mdot=1 kg/s.

   Optimize the net power produced by the cycle with fixed p_4. Draw the sensitivity diagram of net power vs p_3. Find the maximum net power and p_3 at the maximum net power condition.

   ANSWER: The maximum net power is about 691.7 kW, and p_3 at the maximum net power condition is about 103.6 bar.
4. A finite time ideal Rankine OTEC (Ocean thermal energy conversion) cycle as shown in Figure E13.8.3a operates between a finite heat capacity heat source and a finite heat capacity heat sink. The following information is given:

   Heat source: fluid=warm ocean surface water, T_1=26EC, p_1=101 kPa, T_2=20EC, and p_2= 101 kPa

Heat sink: fluid=cold deep ocean water, T_3=5EC, p_3=101 kPa, T_4=10EC, and p_4=101 kPa,

Steam cycle: fluid=ammonia, x_5=0, T_5=12EC, x_7=1, T_7=20EC, and mdot=1 kg/s.

The heat exchangers are counter-flow type, U_H=0.4 kJ/(m^2)K and U_L=0.4 kJ/(m^2)K.

Determine the rate of heat added from the heat source, rate of heat removed to the heat sink, power required by the isentropic pump, power produced by the isentropic turbine, net power produced and efficiency of the cycle.

Since the fuel cost of the OTEC is free, the primary cost is the initial construction cost. The heat exchangers are the major concern of the initial construction cost. Let us take the specific net power output (net output power per unit total heat exchanger surface area) as the design objective function, optimize the warm-side (heater or high-temperature-side heat exchanger) and cold-side (cooler or low-temperature-side heat exchanger) working fluid temperatures.

5. A finite time ideal Rankine OTEC (Ocean thermal energy conversion) cycle as shown in Figure E13.8.3a operates between a finite heat capacity heat source and a finite heat capacity heat sink. The following information is given:

   Heat source: fluid=warm ocean surface water, T_1=26EC, p_1=101 kPa, T_2=20EC, and p_2= 101 kPa

   Heat sink: fluid=cold deep ocean water, T_3=5EC, p_3=101 kPa, T_4=10EC, and p_4=101 kPa,

   Steam cycle: fluid=ammonia, x_5=0, T_5=12EC, x_7=1, T_7=20EC, and mdot=1 kg/s.

   The heat exchangers are cocurrent (parallel)-flow type, U_H=0.4 kJ/(m^2)K and U_L=0.4 kJ/(m^2)K.

   Determine the rate of heat added from the heat source, rate of heat removed to the heat sink, power required by the isentropic pump, power produced by the isentropic turbine, net power produced and efficiency of the cycle.

   Since the fuel cost of the OTEC is free, the primary cost is the initial construction cost. The heat exchanger is the major concern of the initial construction cost. Let us take the specific net power output (net output power per unit total heat exchanger surface area) as the design objective function, optimize the warm-side (heater or high-temperature-side heat exchanger) and cold-side (cooler or low-temperature-side heat exchanger) working fluid temperatures.

13.9. ACTUAL RANKINE CYCLE WITH FINITE CAPACITY HEAT RESERVOIRS

The actual finite time Rankine cycle is shown in Figure 13.9.1. The cycle is an actual Rankine cycle which is made of two adiabatic processes and two isobaric heat transfer processes. The cycle exchanges heats with its surroundings in the two isobaric external irreversible heat transfer processes. The heat source and heat sink are not infinitely large. Therefore, the temperature of the heat source and heat sink change during the heat transfer processes.

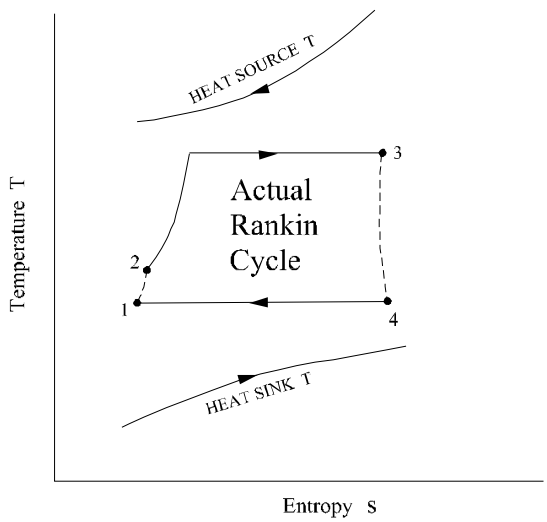

Figure 13.9.1. Finite time actual Rankine cycle with finite heat reservoirs.

Example 13.9.1.

A finite time actual Rankine cycle operates between a finite heat capacity heat source and a finite heat capacity heat sink. The following information is given:

Heat source: fluid=air, T_5=2000EC, p_5=1 bar, T_6=800EC, and p_6=1 bar
Heat sink: fluid=water, T_7=17EC, p_7=1 bar, T_8=30EC, and p_8=1 bar
Steam cycle: fluid=water, x_2=0, p_3=200 bar, x_3=1, p_4=0.2 bar, and mdot=1 kg/s, $0_{turbine}$=85%.

Determine the rate of heat added from the heat source, rate of heat removed to the heat sink, power required by the isentropic pump, power produced by the isentropic turbine, net power produced and efficiency of the cycle.

Optimize the net power produced by the cycle with fix p_1. Draw the sensitivity diagram of net power versus p_3. Find the maximum net power and p_3 at the maximum net power condition.

To solve this problem by CyclePad, we take the following steps:

1. Build the cycle and its surroundings as shown in Figure 13.9.1.
2. Analysis: (A) Assuming the heat exchangers are isobaric, and turbine and pump are isentropic. (B) Input Heat source fluid=air, T_5=2000EC, p_5=1 bar, T_6=800EC, and p_6=1 bar; Heat sink: fluid=water, T_7=17EC, p_7=1 bar, T_8=EC, and p_8=1 bar; and Steam cycle: fluid=water, x_2=0, p_3=200 bar, x_3=1, p_4=0.2 bar, and mdot=1 kg/s, $0_{turbine}$=85%.
3. Display results: The results are: rate of heat added from the heat source=2141 kW, rate of heat removed to the heat sink=-1486 kW, power required by the isentropic

pump=-20.25 kW, power produced by the turbine=676.1 kW, net power produced=655.9 kW and efficiency of the cycle=30.63%.

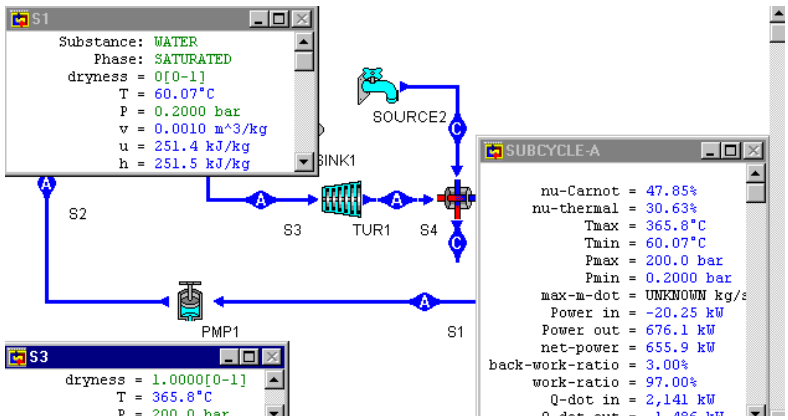

Figure E13.9.1a. Finite time actual Rankine cycle with finite capacity heat reservoirs.

4. Optimization

Draw the sensitivity diagram of net power vs p_3 as shown in Figure E13.9.1b. The maximum net power is about 733.8 kW, and p_3 at the maximum net power condition is about 90.69 bar.

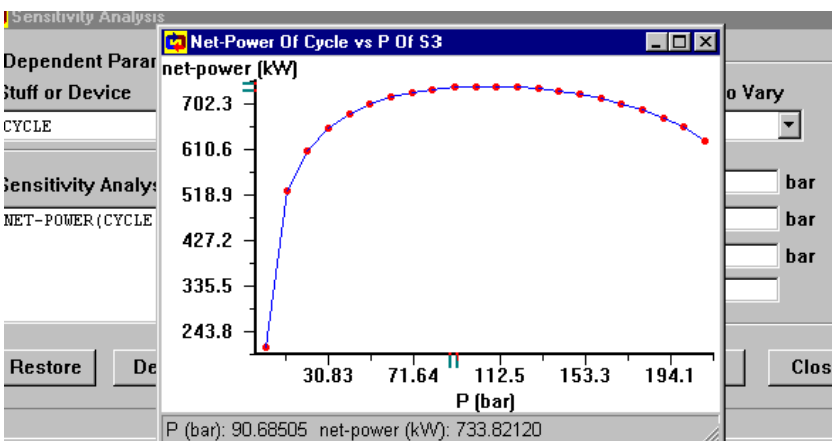

Figure E13.9.1b. Finite time actual Rankine cycle with finite heat reservoirs sensitivity diagram.

Comment: The partial optimization is only for M(net power)/M(p_3)=0. To have the full optimization, we must let M(net power)/M(p_1)=0 also.

Example 13.9.2.

A finite time actual Rankine cycle operates between a finite heat capacity heat source and a finite heat capacity heat sink. The following information is given:

Heat source: fluid=air, T_5=2000EC, p_5=1 bar, T_6=800EC, and p_6=1 bar
Heat sink: fluid=water, T_7=17EC, p_7=1 bar, T_8=30EC, and p_8=1 bar
Steam cycle: fluid=water, x_2=0, p_3=150 bar, T_8=400EC (superheated vapor), p_4=0.1 bar, and mdot=1 kg/s, $0_{turbine}$=85%.

Determine the rate of heat added from the heat source, rate of heat removed to the heat sink, power required by the isentropic pump, power produced by the isentropic turbine, net power produced and efficiency of the cycle.

Optimize the net power produced by the cycle with fix p_1. Draw the sensitivity diagram of net power vs p_3. Find the maximum net power and p_3 at the maximum net power condition.

To solve this problem by CyclePad, we take the following steps:

1. Build the cycle and its surroundings as shown in Figure 13.9.1.
2. Analysis: (A) Assuming the heat exchangers are isobaric, and turbine and pump are isentropic. (B) Input Heat source fluid=air, T_5=2000EC, p_5=1 bar, T_6=800EC, and p_6=1 bar; Heat sink: fluid=water, T_7=17EC, p_7=1 bar, T_8=30EC, and p_8=1 bar; and Steam cycle: fluid=water, x_2=0, p_3=150 bar, T_8=400EC (superheated vapor), p_4=0.1 bar, and mdot=1 kg/s, $0_{turbine}$=85%.

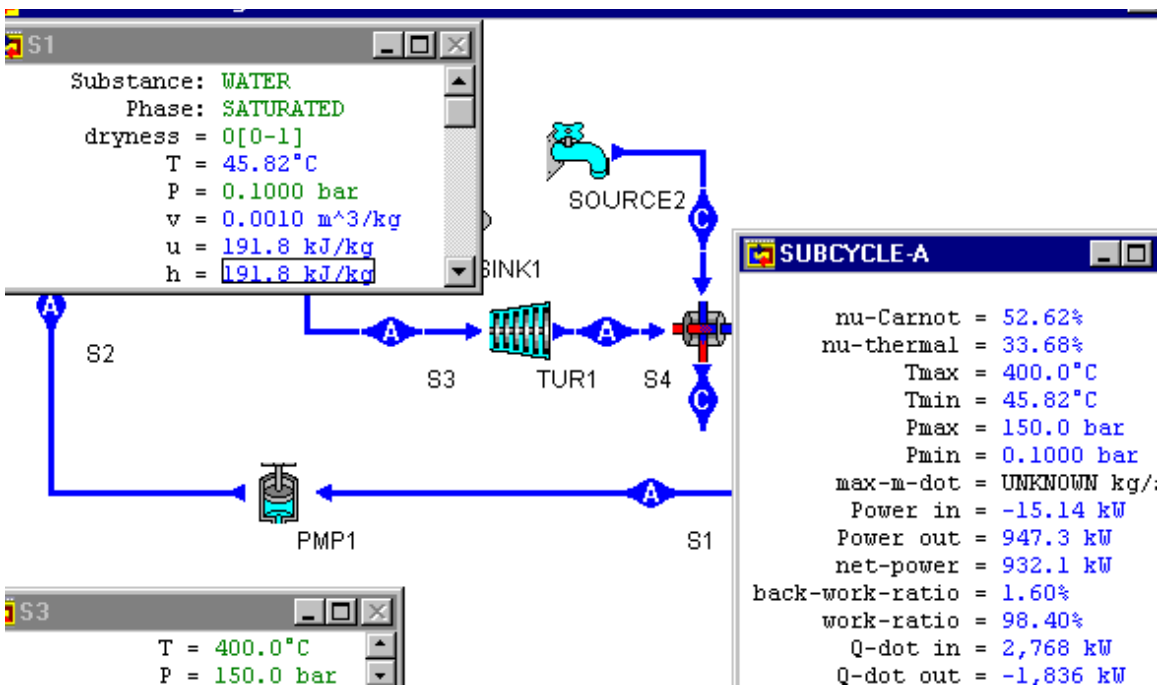

Figure E13.9.2a. Finite time actual Rankine cycle with finite capacity heat reservoirs.

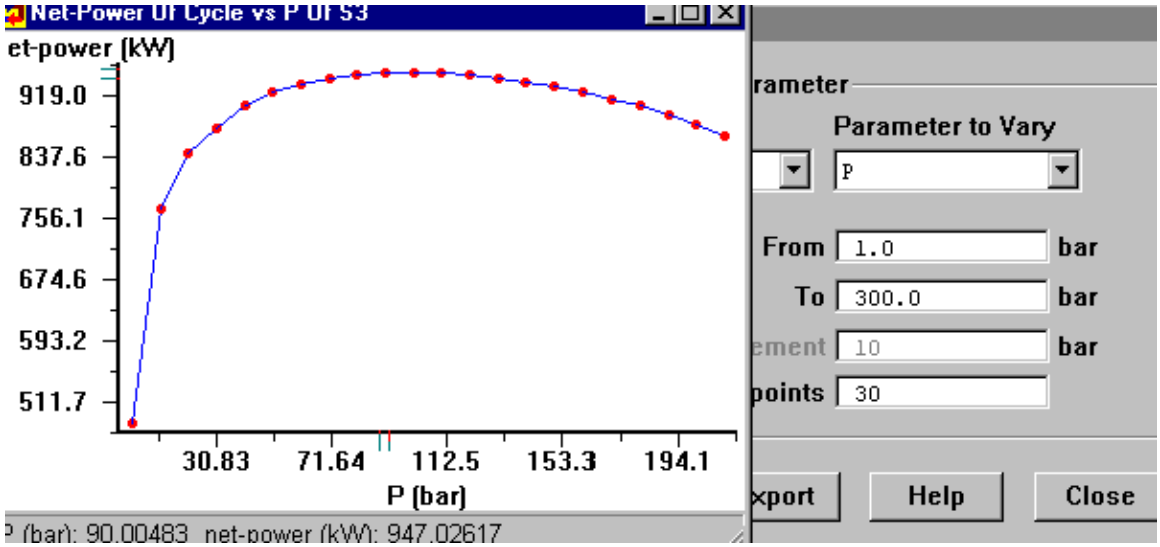

Figure E13.9.2b. Finite time actual Rankine cycle with finite heat reservoirs sensitivity diagram.

3. Display results: The results are: rate of heat added from the heat source=2768 kW, rate of heat removed to the heat sink=-1836 kW, power required by the pump=-15.14 kW, power produced by the turbine=947.3 kW, net power produced=932.1 kW and efficiency of the cycle=33.68%.
4. Optimization

Draw the sensitivity diagram of net power vs p_3 as shown in Figure E13.9.1b. The maximum net power is about 947.0 kW, and p_3 at the maximum net power condition is about 90.0 bar.

Comment: The partial optimization is only for M(net power)/M(p_3)=0. To have the full optimization, we must let M(net power)/M(p_1)=0 also.

Homework 13.9. Finite time ideal Rankine cycle with finite heat capacity reservoirs

1. A finite time actual Rankine cycle operates between a finite heat capacity heat source and a finite heat capacity heat sink. The following information is given:

   Heat source: fluid=air, T_5=2000EC, p_5=1 bar, T_6=800EC, and p_6=1 bar

   Heat sink: fluid=water, T_7=17EC, p_7=1 bar, T_8=30EC, and p_8=1 bar

   Steam cycle: fluid=water, x_2=0, p_3=120 bar, T_8=400EC (superheated vapor), p_4=0.1 bar, and mdot=1 kg/s, $0_{turbine}$=85%.

   Determine the rate of heat added from the heat source, rate of heat removed to the heat sink, power required by the isentropic pump, power produced by the turbine, net power produced and efficiency of the cycle.

   ANSWER: rate of heat added from the heat source=2847 kW, rate of heat removed to the heat sink=-1900 kW, power required by the pump=-12.13 kW, power

produced by the turbine=959.2 kW, net power produced=947.1 kW and efficiency of the cycle=33.27%.

2. A finite time actual Rankine cycle operates between a finite heat capacity heat source and a finite heat capacity heat sink. The following information is given:

   Heat source: fluid=air, T_5=2000EC, p_5=1 bar, T_6=800EC, and p_6=1 bar

   Heat sink: fluid=water, T_7=17EC, p_7=1 bar, T_8=30EC, and p_8=1 bar

   Steam cycle: fluid=water, x_2=0, p_3=120 bar, T_8=400EC (superheated vapor), p_4=0.5 bar, and mdot=1 kg/s, $0_{turbine}$=85%.

   Determine the rate of heat added from the heat source, rate of heat removed to the heat sink, power required by the isentropic pump, power produced by the turbine, net power produced and efficiency of the cycle.

   ANSWER: rate of heat added from the heat source=2698 kW, rate of heat removed to the heat sink=-1908 kW, power required by the pump=-12.32 kW, power produced by the turbine=802.2 kW, net power produced=789.9 kW and efficiency of the cycle=29.28%.

3. A finite time actual Rankine cycle operates between a finite heat capacity heat source and a finite heat capacity heat sink. The following information is given:

   Heat source: fluid=air, T_5=2000EC, p_5=1 bar, T_6=800EC, and p_6=1 bar

   Heat sink: fluid=water, T_7=17EC, p_7=1 bar, T_8=30EC, and p_8=1 bar

   Steam cycle: fluid=water, x_2=0, p_3=120 bar, T_8=400EC (superheated vapor), p_4=0.5 bar, and mdot=1 kg/s, $0_{turbine}$=85%.

   Optimize the net power produced by the cycle with fixed p_1. Draw the sensitivity diagram of net power vs p_3. Find the maximum net power and p_3 at the maximum net power condition.

   ANSWER: The maximum net power is about 789.4 kW, and p_3 at the maximum net power condition is about 100.9 bar.

4. A finite time actual Rankine OTEC (Ocean thermal energy conversion) cycle as shown in Figure E13.9.3a operates between a finite heat capacity heat source and a finite heat capacity heat sink. The following information is given:

   Pump efficiency=85% and turbine efficiency=85%

   Heat source: fluid=warm ocean surface water, T_1=26EC, p_1=101 kPa, T_2=20EC, and p_2= 101 kPa

   Heat sink: fluid=cold deep ocean water, T_3=5EC, p_3=101 kPa, T_4=10EC, and p_4=101 kPa,

   Steam cycle: fluid=ammonia, x_5=0, T_5=12EC, x_7=1, T_7=20EC, and mdot=1 kg/s.

   The heat exchangers are counter-flow type, U_H=0.4 kJ/(m^2)K and U_L=0.4 kJ/(m^2)K.

   Determine the rate of heat added from the heat source, rate of heat removed to the heat sink, power required by the isentropic pump, power produced by the isentropic turbine, net power produced and efficiency of the cycle.

   Since the fuel cost of the OTEC is free, the primary cost is the initial construction cost. The heat exchangers are the major concern of the initial construction cost. Let us take the specific net power output (net output power per unit total heat exchanger surface area) as the design objective function, optimize the

warm-side (heater or high-temperature-side heat exchanger) and cold-side (cooler or low-temperature-side heat exchanger) working fluid temperatures.

5. A finite time actual Rankine OTEC (Ocean thermal energy conversion) cycle as shown in Figure E13.8.3a operates between a finite heat capacity heat source and a finite heat capacity heat sink. The following information is given:

   Pump efficiency=85% and turbine efficiency=85%

   Heat source: fluid=warm ocean surface water, T_1=26EC, p_1=101 kPa, T_2=20EC, and p_2= 101 kPa

   Heat sink: fluid=cold deep ocean water, T_3=5EC, p_3=101 kPa, T_4=10EC, and p_4=101 kPa,

   Steam cycle: fluid=ammonia, x_5=0, T_5=12EC, x_7=1, T_7=20EC, and mdot=1 kg/s.

   The heat exchangers are cocurrent (parallel)-flow type, U_H=0.4 kJ/(m^2)K and U_L=0.4 kJ/(m^2)K.

   Determine the rate of heat added from the heat source, rate of heat removed to the heat sink, power required by the isentropic pump, power produced by the isentropic turbine, net power produced and efficiency of the cycle.

   Since the fuel cost of the OTEC is free, the primary cost is the initial construction cost. The heat exchanger is the major concern of the initial construction cost. Let us take the specific net power output (net output power per unit total heat exchanger surface area) as the design objective function, optimize the warm-side (heater or high-temperature-side heat exchanger) and cold-side (cooler or low-temperature-side heat exchanger) working fluid temperatures.

6. Design a finite-time 100 MW OTEC Rankine power plant at Gulf of Mexico. The design objective is based on specific power. There are two heat exchangers (boiler and condenser) in the Rankine cycle. Total heat exchanger surface area is equal to the heat exchanger surface area of the boiler plus heat exchanger surface area of the condenser. Specific power is defined to be Net power output per unit area of the total heat exchanger surface. Since the energy input to the OTEC plant is free, the major cost of the plant is the cost of the two heat exchangers.

   The following information at the potential OTEC site in Gulf of Mexico is given:

   Heat source: warm ocean surface water at 26C.

   Heat sink: cold deep ocean water at 4C.

   The available heat exchangers are counter-flow type, U_H=0.5 kJ/(m^2)K and U_L=0.5 kJ/(m^2)K. The available turbine adiabatic efficiency—80%. The available pump adiabatic efficiency—100%. Boiler—isobaric both sides. Condenser-- isobaric both sides. A finite time actual Rankine OTEC (Ocean thermal energy conversion) cycle designed by a junior engineer is shown below.

   The junior engineer has the following input for his closed OTEC Rankine cycle:

   Working fluid—ammonia with 1 kg/s mass flow rate
   Pump inlet state (state 1)—11 C and 0% quality
   Turbine inlet state (state 3)—20 C and 100% quality
   Warm surface water inlet to boiler (state 5)—26 C and 101 kPa
   Warm surface water exit from boiler (state 6)—22 C and 101 kPa
   Cold deep ocean water inlet to condenser (state 7)—4 C and 101 kPa

Cold deep ocean water exit from condenser (state 8)—9 C and 101 kPa
The following output for his closed OTEC Rankine cycle are obtained:

Net power output per unit mass flow rate—25.11 kW
Qdotin (boiler)—1224 kW
Qdotout (condenser)—-1199 kW
LMTDboiler=7.96 C
LMTDcondenser=3.99 C
Mass flow rate of warm surface water—73.14 kg/s
Mass flow rate of cold deep ocean water water—57.13 kg/s
The junior engineer then calculated the following:
Cycle efficiency= (Net power output)/ [Qdotin (boiler)]=25.11/1224=2.051%
Boiler surface area=[Qdotin (boiler)]/{LMTDboiler(U_H)} =1224/[7.96(0.5)]=307.5 m^2
Condenser surface area= [Qdotout (condenser)]/{LMTDcondenser(U_L)} =1199/[3.99(0.5)] =601.0 m^2
Total HX surface area= Boiler surface area + Condenser surface area =307.5+601.0=908.5 m^2
Specific power=(Net power output)/(Total HX surface area) =25.11/908.5=0.02764 kW/ m^2
Ammonia mass flow rate=(Required design power)/(Net power output per unit mass flow rate)= 100,000/25.11=3982 kg/s
You may change any or all of the junior engineer's design input including the working fluid, and see how you can design a better OTEC power plant with a larger specific power.

13.10. FINITE TIME BRAYTON CYCLE

The schematic and T-s diagrams of the ideal Finite time Brayton cycle are shown in Figure 13.10.1 and Figure 13.10.2. The cycle is an endo-reversible cycle which is made of two isentropic processes and two isobaric heat transfer processes. The cycle exchanges heats with its surroundings in the two isobaric external irreversible heat transfer processes. By taking into account the rates of heat transfer associated with the cycle, the upper bound of the power output of the cycle can be found as illustrated in the following example.

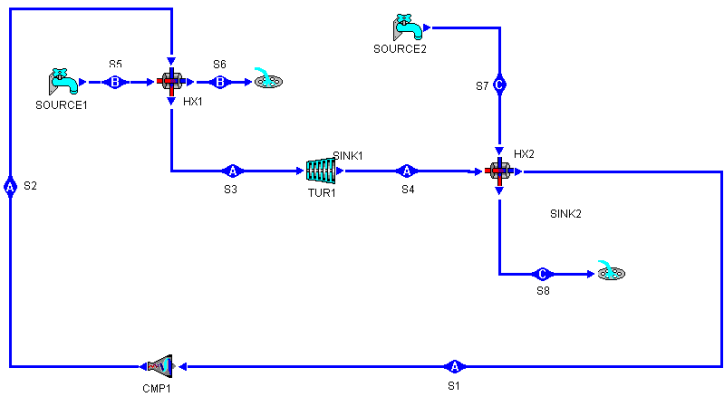

Figure 13.10.1. Schematic diagram of the ideal Finite time Brayton cycle.

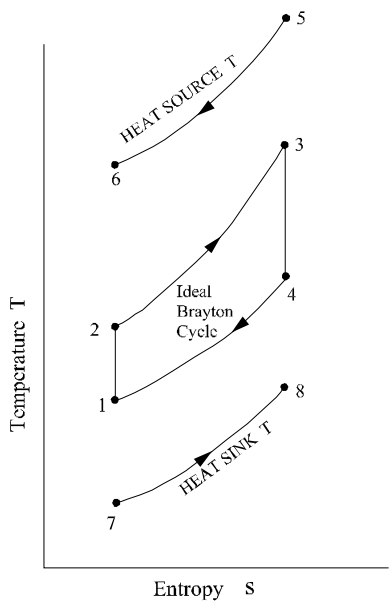

Figure 13.10.2. T-s diagrams of the ideal Finite time Brayton cycle.

Example 13.10.1.

A finite time ideal Brayton cycle operates between a heat source and a heat sink. The following information is given:

Heat source: fluid=air, T_5=2773 K, p_5=100 kPa, T_6=2473 K, and p_6=100 kPa
Heat sink: fluid=water, T_7=373.1 K, x_7=0, T_8=373.1 K, and x_8=1

Brayton cycle: fluid=helium, T_1=423 K, p_1=100 kPa, T_3=1500 K, p_3=800 kPa, and mdot=1 kg/s.

Determine the rate of heat added from the heat source, rate of heat removed to the heat sink, power required by the isentropic compressor, power produced by the isentropic turbine, net power produced and efficiency of the cycle. Optimize the net power produced by the cycle with fixed p_1. Draw the sensitivity diagram of net power versus p_3. Find the maximum net power and p_3 at the maximum net power condition. Optimize the net power produced by the cycle with fixed p_3. Draw the sensitivity diagram of net power versus p_1. Find the maximum net power and p_1 at the maximum net power condition.

To solve this problem by CyclePad, we take the following steps:

1. Build the cycle and its surroundings as shown in Figure 13.10.1.
2. Analysis: (A) Assuming the heat exchangers are isobaric, and turbine and compressor are isentropic. (B) Input Heat source: fluid=air, T_5=2773 K, p_5=100 kPa, T_6=2473 K, and p_6=100 kPa; Heat sink: fluid=water, T_7=373.1 K, x_7=0, T_8=373.1 K, and x_8=1; Brayton cycle: fluid=helium, T_1=423 K, p_1=100 kPa, T_3=1500 K, p_3=800 kPa, and mdot=1 kg/s.
3. Display results: The results are: rate of heat added from the heat source=2722 kW, rate of heat removed to the heat sink=-1182 kW, power required by the compressor=-2854 kW, power produced by the turbine=4394 kW, net power produced=1540 kW and efficiency of the cycle=56.58%.

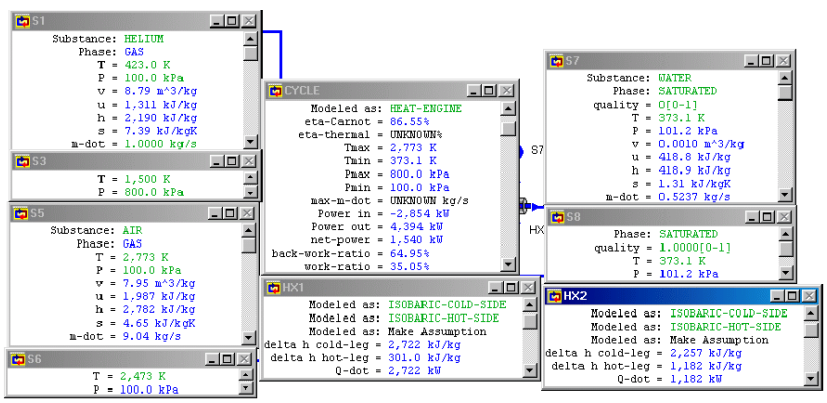

Figure E13.10.1a. Finite time ideal Brayton cycle.

4. Optimization

Draw the sensitivity diagram of net power versus p_3 as shown in Figure E13.10.1b. The maximum net power is about 1697 kW, and p_3 at the maximum net power condition is about 491.6 kPa.

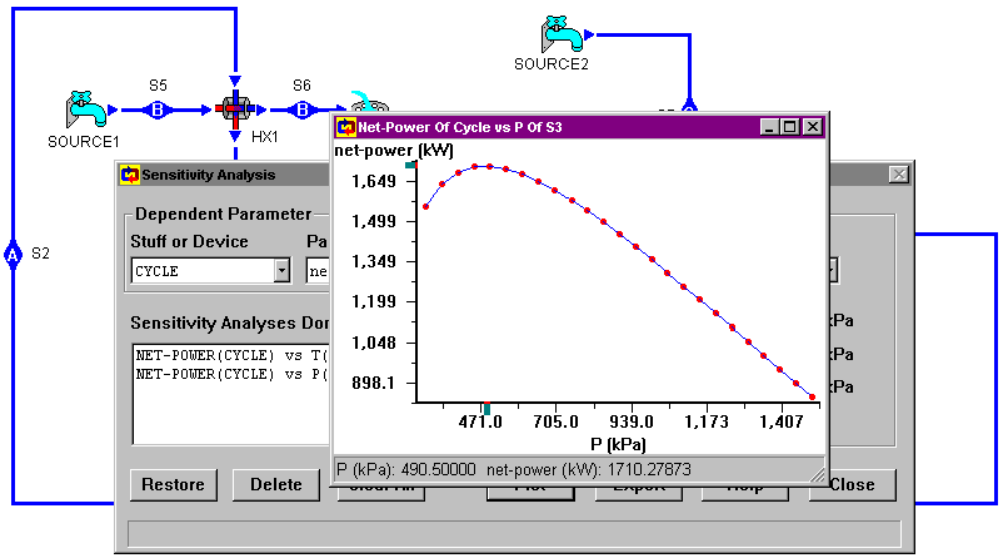

Figure E13.10.1b. Finite time ideal Brayton cycle Sensitivity diagram.

Comment: The partial optimization is only for M(net power)/M(p_3)=0. To have the full optimization, we must let M(net power)/M(p_1)=0 also.

5. Optimization

Draw the sensitivity diagram of net power versus p_1 as shown in Figure E13.10.1c. The maximum net power is about 1699 kW, and p_3 at the maximum net power condition is about 147.4 kPa.

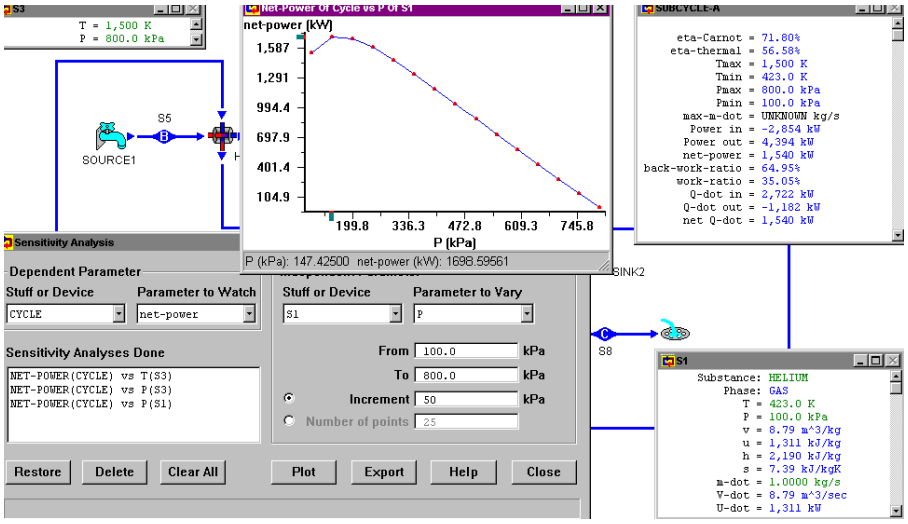

Figure E13.10.1c. Finite time ideal Brayton cycle Sensitivity diagram.

Comment: The partial optimization is only for M(net power)/M(p_3)=0. To have the full optimization, we must let M(net power)/M(p_1)=0 also.

Example 13.10.2.

A finite time ideal Brayton cycle operates between a heat source and a heat sink. The following information is given:

Heat source: fluid=air, T_4=2500EC, p_4=1 bar, T_5=1500EC, and p_5=1bar;
Heat sink: fluid=air, T_7=15EC, p_7=1 bar, T_8=90EC, and p_8=1 bar;
Brayton cycle: fluid=air, T_1=100EC, p_1=1 bar, T_3=1200EC, p_3=10 bar, and mdot=1 kg/s.
The heat exchangers are counter-flow type with U_H=1 kW/(m^2K) and U_L=1 kW/(m^2K).

Determine the rate of heat added from the heat source, rate of heat removed to the heat sink, power required by the isentropic compressor, power produced by the isentropic turbine, net power produced and efficiency of the cycle.

(A) Optimize the cycle based on cycle efficiency with respect to p_3, (B) Optimize the cycle based on net power with respect to p_3, (C) Optimize the cycle based on net power per unit conductance of heat exchanger with respect to p_3, and (D) Optimize the cycle based on net power per unit surface of heat exchanger with respect to p_3.

To solve this problem by CyclePad, we take the following steps:

1. Build the cycle and its surroundings as shown in Figure 13.10.1.
2. Analysis: (A) Assume the heat exchangers are isobaric and counter-flow type, and turbine and compressor are isentropic. (B) Input Heat source: fluid=air, T_4=2500EC, p_4=1 bar, T_5=1500EC, and p_5=1bar; Heat sink: fluid=air, T_7=15EC, p_7=1 bar, T_8=90EC, and p_8=1 bar; and Brayton cycle: fluid=air, T_1=100EC, p_1=1 bar, T_3=1200EC, p_3=10 bar, and mdot=1 kg/s as shown in Figure E13.10.2a.

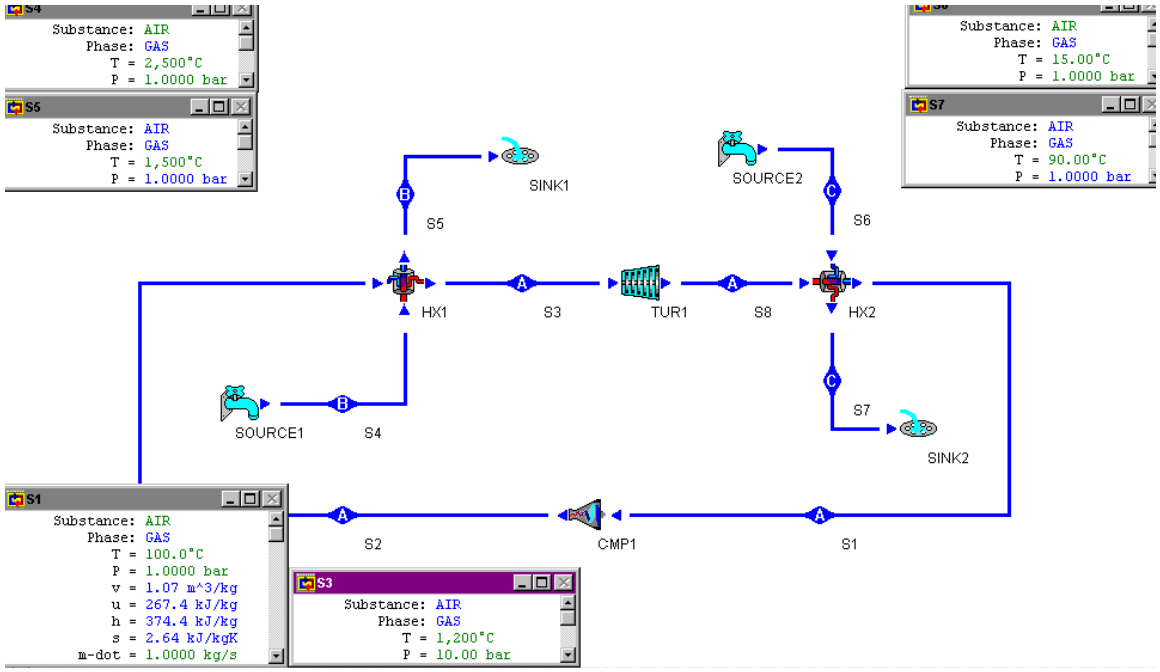

Figure E13.10.2a .Finite time Brayton cycle input.

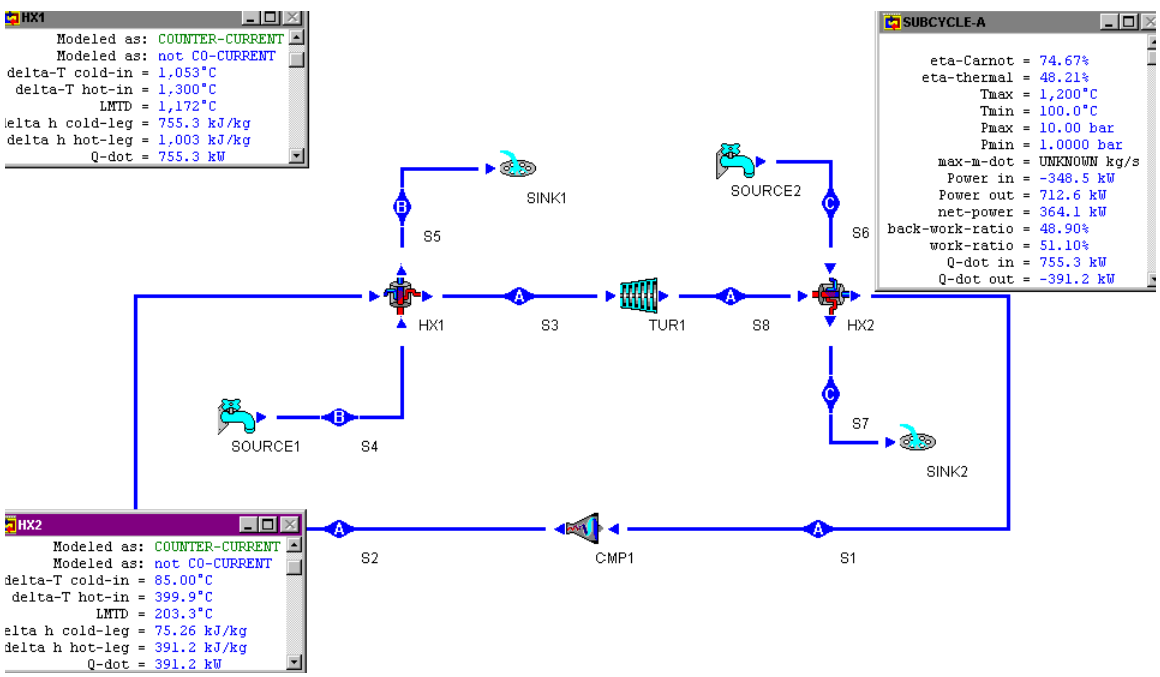

Figure E13.10.2b. Finite time Brayton cycle output.

3. Display results: The results are: rate of heat added from the heat source=755.3 kW, rate of heat removed to the heat sink=-391.2 kW, net power produced=364.1 kW, $LMTD_H$=1172 K, $LMTD_L$=203.3 K, and efficiency of the cycle=48.21% as shown in Figure Example 13.10.2b.

Change p_3=2, 3, 4, 5, 6, 7, 8 ,9. 11, 12, 14 and 15 bar. The following table is made as shown in Table E13.10.2 and we have: (A) Optimize the cycle based on cycle efficiency with respect to p_3, 0_{max}=52.95% at p_3=14 bar; (B) Optimize the cycle based on net power with respect to p_3, net $power_{max}$=364.7 kW at p_3=11 bar; and (C) Optimize the cycle based on net power per unit conductance of heat exchangers with respect to p_3, and net power per unit conductance of heat $exchangers_{max}$=151.8 kW/(kW/K) at p_3=14 bar.

Table E13.10.2. Finite time Brayton cycle optimization

p3	CY EFF	QDOTH	QDOTL	LMTDH	LMTDL	UHAH	ULAL	SUM(UA)	PNET	PNET/UA	AH	AL	PNET/A
bar	%	kW	kW	K	K	kW/K	kW/K	kW/K	kW	kW/kW/K	m^2	m^2	kW/m^2
2	17.97	1022	838.2	1309	331	0.780749	2.532326	3.313075	183.6	55.4168	0.013793	5.064653	36.1528
3	26.94	965.7	705.5	1281	295.3	0.753864	2.389096	3.14296	260.2	82.7882	0.009182	4.778192	54.35131
4	32.7	921.8	620.3	1259	271.6	0.732168	2.283873	3.016042	301.5	99.96546	0.007575	4.567747	65.89701
5	36.86	885.2	558.9	1240	254	0.713871	2.200394	2.914265	326.3	111.9665	0.006743	4.400787	74.03238
6	40.07	853.4	511.5	1224	240.1	0.697222	2.130362	2.827585	341.9	120.9159	0.006231	4.260725	80.12739
7	42.65	825.3	473.3	1209	228.7	0.68263	2.069523	2.752154	352	127.8998	0.005879	4.139047	84.92311
8	44.8	799.9	441.6	1196	219	0.668813	2.016438	2.685251	358.3	133.4326	0.005628	4.032877	88.72096
9	46.62	776.7	414.6	1183	210.7	0.656551	1.967727	2.624278	362.1	137.9808	0.005434	3.935453	91.88286
10	48.21	755.3	391.2	1172	203.3	0.644454	1.92425	2.568704	364.1	141.7446	0.005285	3.8485	94.47855
11	49.6	735.5	370.6	1161	196.8	0.633506	1.88313	2.516636	**364.7**	144.9157	0.005164	3.76626	96.70088
12	50.83	716.6	352.3	1151	190.9	0.622589	1.845469	2.468058	364.3	147.6059	0.005066	3.690938	98.56593
14	**52.95**	682.3	321	1132	180.6	0.602739	1.777409	2.380147	361.3	**151.7973**	0.004919	3.554817	**101.4963**
15	51.95	699	335.9	1142	185.5	0.612084	1.810782	2.422866	363.1	149.8639	0.004987	3.621563	100.1227

Homework 13.10. Finite Time Ideal Brayton Cycle

1. A finite time ideal Brayton cycle operates between a heat source and a heat sink. The following information is given:

   Heat source: fluid=air, T_5=2773 K, p_5=100 kPa, T_6=2473 K, and p_6=100 kPa

   Heat sink: fluid=water, T_7=373.1 K, x_7=0, T_8=373.1 K, and x_8=1

   Brayton cycle: fluid=helium, T_1=423 K, p_1=100 kPa, T_3=1800 K, p_3=800 kPa, and mdot=1 kg/s.

   Determine the rate of heat added from the heat source, rate of heat removed to the heat sink, power required by the isentropic compressor, power produced by the isentropic turbine, net power produced and efficiency of the cycle.

   ANSWER: rate of heat added from the heat source=4275 kW, rate of heat removed to the heat sink=-1856 kW, power required by the compressor=-2854 kW, power produced by the turbine=5272 kW, net power produced=2419 kW and efficiency of the cycle=56.58%.

2. A finite time ideal Brayton cycle operates between a heat source and a heat sink. The following information is given:

   Heat source: fluid=air, T_5=2773 K, p_5=100 kPa, T_6=2473 K, and p_6=100 kPa

   Heat sink: fluid=water, T_7=373.1 K, x_7=0, T_8=373.1 K, and x_8=1

Brayton cycle: fluid=helium, T_1=423 K, p_1=100 kPa, T_3=1800 K, p_3=800 kPa, and mdot=1 kg/s.

Optimize the net power produced by the cycle with fix p_3. Draw the sensitivity diagram of net power versus p_1. Find the maximum net power and p_1 at the maximum net power condition.

ANSWER: The maximum net power is about 2457 kW, and p_1 at the maximum net power condition is about 145.2 kPa.

3. A finite time ideal Brayton cycle operates between a heat source and a heat sink. The following information is given:

   Heat source: fluid=air, T_5=2773 K, p_5=100 kPa, T_6=2473 K, and p_6=100 kPa

   Heat sink: fluid=water, T_7=373.1 K, x_7=0, T_8=373.1 K, and x_8=1

   Brayton cycle: fluid=helium, T_1=423 K, p_1=100 kPa, T_3=1800 K, p_3=800 kPa, and mdot=1 kg/s.

   Determine the rate of heat added from the heat source, rate of heat removed to the heat sink, power required by the isentropic compressor, power produced by the isentropic turbine, net power produced and efficiency of the cycle.

   ANSWER: rate of heat added from the heat source=3803 kW, rate of heat removed to the heat sink=-1510 kW, power required by the compressor=-3326 kW, power produced by the turbine=5619 kW, net power produced=2293 kW and efficiency of the cycle=60.30%.

4. A finite time ideal Brayton cycle operates between a heat source and a heat sink. The following information is given:

   Heat source: fluid=air, T_5=2773 K, p_5=100 kPa, T_6=2473 K, and p_6=100 kPa

   Heat sink: fluid=water, T_7=373.1 K, x_7=0, T_8=373.1 K, and x_8=1

   Brayton cycle: fluid=helium, T_1=423 K, p_1=100 kPa, T_3=1800 K, p_3=1000 kPa, and mdot=1 kg/s.

   Optimize the net power produced by the cycle with fix p_1. Draw the sensitivity diagram of net power versus p_3. Find the maximum net power and p_3 at the maximum net power condition.

   ANSWER: The maximum net power is about 2460 kW, and p_3 at the maximum net power condition is about 608.6 kPa.

5. A finite time ideal Brayton cycle operates between a heat source and a heat sink. The following information is given:

   Heat source: fluid=air, T_5=2773 K, p_5=100 kPa, T_6=2473 K, and p_6=100 kPa

   Heat sink: fluid=water, T_7=373.1 K, x_7=0, T_8=373.1 K, and x_8=1

   Brayton cycle: fluid=air, T_1=423 K, p_1=100 kPa, T_3=1500 K, p_3=800 kPa, and mdot=1 kg/s.

   Determine the rate of heat added from the heat source, rate of heat removed to the heat sink, power required by the isentropic compressor, power produced by the isentropic turbine, net power produced and efficiency of the cycle. Optimize the net power produced by the cycle with fix p_1. Draw the sensitivity diagram of net power versus p_3. Find the maximum net power and p_3 at the maximum net power condition.

   ANSWER: rate of heat added from the heat source=736.3 kW, rate of heat removed to the heat sink=-406.4 kW, power required by the compressor=-344.0 kW, power produced by the turbine=674.2 kW, net power produced=329.8 kW and efficiency of the cycle=44.80%.

The maximum net power is about 330.7 kW, and p_3 at the maximum net power condition is about 836.8 kPa.

13.11. ACTUAL BRAYTON FINITE TIME CYCLE

The actual finite time Brayton cycle as shown in Figure 13.11.1 is made of two adiabatic processes and two isobaric heat transfer processes. The cycle exchanges heats with its surroundings in the two isobaric external irreversible heat transfer processes. By taking into account the rates of heat transfer associated with the cycle, the upper bound of the power output of the cycle can be found as illustrated in the following example.

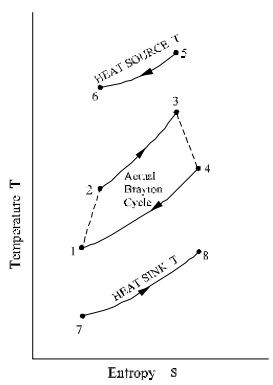

Figure 13.11.1. Actual finite time Brayton cycle.

Example 13.11.1.

A finite time actual Brayton cycle operates between a heat source and a heat sink. The following information is given:

Heat source: fluid=air, T_5=2773 K, p_5=100 kPa, T_6=2473 K, and p_6=100 kPa
Heat sink: fluid=water, T_7=373.1 K, x_7=0, T_8=373.1 K, and x_8=1
Brayton cycle: fluid=air, $0_{compressor}$=85%, $0_{turbine}$=85%, T_1=423 K, p_1=100 kPa, T_3=1500 K, p_3=800 kPa, and mdot=1 kg/s.

Determine the rate of heat added from the heat source, rate of heat removed to the heat sink, power required by the isentropic compressor, power produced by the isentropic turbine, net power produced and efficiency of the cycle.

Optimize the net power produced by the cycle with fixed p_1. Draw the sensitivity diagram of net power versus p_3. Find the maximum net power and p_3 at the maximum net power condition. Optimize the net power produced by the cycle with fixed p_3. Draw the sensitivity diagram of net power vs p_1. Find the maximum net power and p_3 at the maximum net power condition.

To solve this problem by CyclePad, we take the following steps:

1. Build the cycle and its surroundings as shown in Figure 13.11.1.
2. Analysis: (A) Assuming the heat exchangers are isobaric, and turbine and compressor are isentropic. (B) Input Heat source: fluid=air, T_5=2773 K, p_5=100 kPa, T_6=2473 K, and p_6=100 kPa; Heat sink: fluid=water, T_7=373.1 K, x_7=0, T_8=373.1 K, and x_8=1; Brayton cycle: fluid=air, $0_{compressor}$=85%, $0_{turbine}$=85%, T_1=423 K, p_1=100 kPa, T_3=1500 K, p_3=800 kPa, and mdot=1 kg/s.
3. Display results: The results are: rate of heat added from the heat source=675.5 kW, rate of heat removed to the heat sink=-507.6 kW, power required by the compressor=-405.2 kW, power produced by the turbine=573.1 kW, net power produced=167.9 kW and efficiency of the cycle=24.86%.

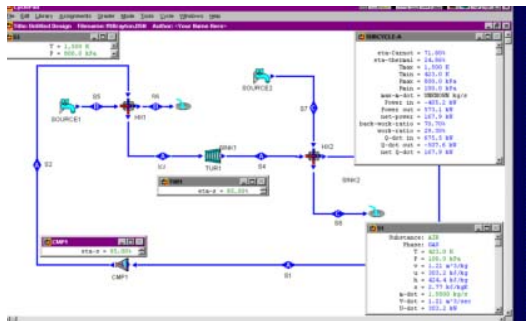

Figure E13.11.1a. Finite time actual Brayton cycle.

4. Optimization

Draw the sensitivity diagram of net power versus p_3 as shown in Figure E13.11.1b. The maximum net power is about 179.8 kW, and p_3 at the maximum net power condition is about 544.3 kPa.

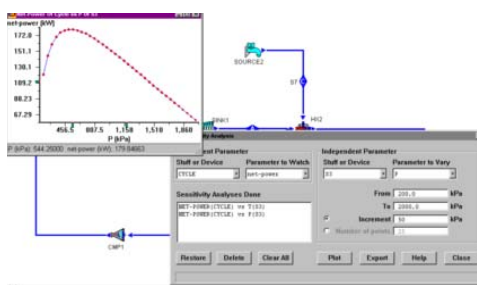

Figure E13.11.1b. Finite time actual Brayton cycle Sensitivity diagram.

Comment: The partial optimization is only for M(net power)/M(p_3)=0. To have the full optimization, we must let M(net power)/M(p_1)=0 also.

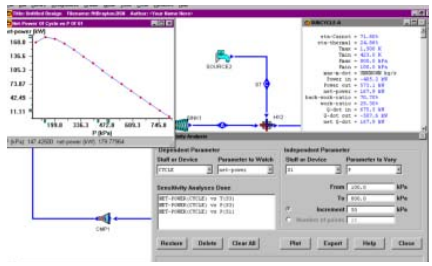

Figure E13.11.1c. Finite time actual Brayton cycle Sensitivity diagram.

5. Optimization

Draw the sensitivity diagram of net power versus p_3 as shown in Figure E13.11.1c. The maximum net power is about 179.8 kW, and p_1 at the maximum net power condition is about 147.4 kPa.

Comment: The partial optimization is only for M(net power)/M(p_{31})=0. To have the full optimization, we must let M(net power)/M(p_3)=0 also.

Homework 13.11. Finite Time Actual Brayton Cycle

1. A finite time actual Brayton cycle operates between a heat source and a heat sink. The following information is given:

   Heat source: fluid=air, T_5=2773 K, p_5=100 kPa, T_6=2473 K, and p_6=100 kPa

   Heat sink: fluid=water, T_7=373.1 K, x_7=0, T_8=373.1 K, and x_8=1

   Brayton cycle: fluid=air, $0_{compressor}$=80%, $0_{turbine}$=80%, T_1=423 K, p_1=100 kPa, T_3=1500 K, p_3=800 kPa, and mdot=1 kg/s.

   Determine the rate of heat added from the heat source, rate of heat removed to the heat sink, power required by the isentropic compressor, power produced by the isentropic turbine, net power produced and efficiency of the cycle.

   ANSWER: rate of heat added from the heat source=650.2 kW, rate of heat removed to the heat sink=-541.3 kW, power required by the compressor=-430.5 kW, power produced by the turbine=539.4 kW, net power produced=108.9 kW and efficiency of the cycle=16.74%.
2. A finite time actual Brayton cycle operates between a heat source and a heat sink. The following information is given:

   Heat source: fluid=air, T_5=2773 K, p_5=100 kPa, T_6=2473 K, and p_6=100 kPa

   Heat sink: fluid=water, T_7=373.1 K, x_7=0, T_8=373.1 K, and x_8=1

   Brayton cycle: fluid=air, $0_{compressor}$=80%, $0_{turbine}$=80%, T_1=423 K, p_1=100 kPa, T_3=1500 K, p_3=800 kPa, and mdot=1 kg/s. Optimize the net power produced by the cycle with fix p_1. Draw the sensitivity diagram of net power versus p_3. Find the maximum net power and p_3 at the maximum net power condition.

   ANSWER: The maximum net power is about 135.0 kW, and p_3 at the maximum net power condition is about 200.0 kPa.
3. A finite time actual Brayton cycle operates between a heat source and a heat sink. The following information is given:

   Heat source: fluid=air, T_5=2773 K, p_5=100 kPa, T_6=2473 K, and p_6=100 kPa

Heat sink: fluid=water, T_7=373.1 K, x_7=0, T_8=373.1 K, and x_8=1

Brayton cycle: fluid=air, $0_{compressor}$=90%, $0_{turbine}$=90%, T_1=423 K, p_1=100 kPa, T_3=1500 K, p_3=800 kPa, and mdot=1 kg/s.

Determine the rate of heat added from the heat source, rate of heat removed to the heat sink, power required by the isentropic compressor, power produced by the isentropic turbine, net power produced and efficiency of the cycle. Optimize the net power produced by the cycle with fixed p_1. Draw the sensitivity diagram of net power versus p_3. Find the maximum net power and p_3 at the maximum net power condition.

ANSWER: rate of heat added from the heat source=698.0 kW, rate of heat removed to the heat sink=-473.9 kW, power required by the compressor=-382.7 kW, power produced by the turbine=606.8 kW, net power produced=224.1 kW and efficiency of the cycle=32.11%.

The maximum net power is about 227.0 kW, and p_3 at the maximum net power condition is about 608.6 kPa.

4. A finite time actual Brayton cycle operates between a heat source and a heat sink. The following information is given:

   Heat source: fluid=air, T_5=2773 K, p_5=100 kPa, T_6=2473 K, and p_6=100 kPa

   Heat sink: fluid=water, T_7=373.1 K, x_7=0, T_8=373.1 K, and x_8=1

   Brayton cycle: fluid=helium, $0_{compressor}$=90%, $0_{turbine}$=90%, T_1=423 K, p_1=100 kPa, T_3=1500 K, p_3=800 kPa, and mdot=1 kg/s.

   Determine the rate of heat added from the heat source, rate of heat removed to the heat sink, power required by the isentropic compressor, power produced by the isentropic turbine, net power produced and efficiency of the cycle. Optimize the net power produced by the cycle with fixed p_1. Draw the sensitivity diagram of net power versus p_3. Find the maximum net power and p_3 at the maximum net power condition.

   ANSWER: rate of heat added from the heat source=2405 kW, rate of heat removed to the heat sink=-1621 kW, power required by the compressor=-3171 kW, power produced by the turbine=3954 kW, net power produced=783.6 kW and efficiency of the cycle=32.59%.

   The maximum net power is about 1158 kW, and p_3 at the maximum net power condition is about 357.1 kPa.

5. A finite time actual Brayton cycle operates between a heat source and a heat sink. The following information is given:

   Heat source: fluid=air, T_5=2773 K, p_5=100 kPa, T_6=2473 K, and p_6=100 kPa

   Heat sink: fluid=water, T_7=373.1 K, x_7=0, T_8=373.1 K, and x_8=1

   Brayton cycle: fluid=helium, $0_{compressor}$=90%, $0_{turbine}$=90%, T_1=423 K, p_1=100 kPa, T_3=1500 K, p_3=800 kPa, and mdot=1 kg/s.

   Optimize the net power produced by the cycle with fixed p_3. Draw the sensitivity diagram of net power versus p_1. Find the maximum net power and p_3 at the maximum net power condition.

   ANSWER: The maximum net power is about 1163 kW, and p_1 at the maximum net power condition is about 197.5 kPa.

13.12. OTHER FINITE TIME CYCLES

Finite time thermodynamics is one of the newest and most challenging areas in thermodynamics. Two books entitled Recent Advances in Finite Time Thermodynamics (Editors: Chih Wu, Lingen Chen and Jincan Chen, Nova Science Publishers, Inc., New York, USA, 1999, ISBN 1-56072-644-4) and Advances in Finite Time Thermodynamics: Analysis and Optimization (Editors: Lingen Chen and Fengrui Sun, Nova Science Publishers, Inc., New York, USA, 2004, ISBN 1-59033-914-2) provides results from research, which continues at an impressive rate. The book contains many academic and industrial papers that are relevant to current problems and practice. The numerous contributions from the international thermodynamic community are indicative of the continuing global interest in finite time thermodynamics.

The readers should find the following papers informative and useful for analysis and design of various finite time thermodynamic cycles. It is hoped that these papers will provide interest and encouragement for further study in the area of finite time thermodynamics.

Carnot Cycle

Wu, C., Power optimization of a finite-time Carnot heat engine, *Energy:The International Journal*, **13**(9), 681-687, 1988.

Wu, C. and R.L. Kiang,, Finite time thermodynamic Analysis of a Carnot engine with internal irreversibility, *Energy:The International Journal*, **17**(12), 1173-1178, 1992.

Wu, C., Specific heating load of an endo-reversible Carnot heat pump, *International Journal of Ambient Energy*, **14**(1), 25-28, 1993.

Wu, C., Maximum obtainable specific cooling load of a Carnot refrigerator, *Energy Conversion and Management*, **36**(1), 7-10, 1995.

Wu, C., General performance characteristics of a finite-speed Carnot refrigerator, Applied Thermal Engineering, **16**(4), 299-304, 1996.

Lingen Chen and C.Wu, Performance of an endo-reversible Carnot refrigerator, *Energy Conversion and Management*, **37**(10), 1509-1512, 1996.

Lingen Chen and C.Wu, The influence of heat transfer law on the endo-reversible Carnot refrigerator, *Journal of the Institute of Energy*, **69**(480), 96-100, 1996.

Lingen Chen and C.Wu, Optimal performance of an endo-reversible Carnot heat pump, *Energy Conversion and Management*, **38**(14), 1439-1444, 1997.

Lingen Chen and C.Wu, Effect of heat transfer law on the performance of a generalized Carnot heat pump, *Journal of the Institute of Energy*, **72**(2), 64-68, 1999.

Lingen Chen and C.Wu, Effect of heat transfer law on the performance of generalized irreversible Carnot refrigerator, *J. of Engineering Thermophysics* , **20**(2), 10-13, 1999.

Lingen Chen, F. Sun and C.Wu, Ecological optimization for generalized irreversible Carnot refrigerators, *Journal of Physics D: Applied Physics*, **38**, 113-118, 2005.

Brayton Cycle

Wu, C., Work and power optimization of a finite-time Brayton cycle, *International Journal of Ambient Energy*, **11**(3), pp129-136, 1990.

Wu, C., Power optimization of an endo-reversible Brayton gas heat engine, *Energy Conversion and Management*, **31**(6), 561-565, 1991.

Wu, C. and R.L. Kiang,, Power performance of a non-isentropic Brayton cycle, *ASME Journal of Engineering for Gas Turbines and Power*, **113**, 501-504, 1991.

Wu, C., Performance of a regenerative Brayton heat engine, *Energy: The International Journal*, **21**(2), 71-76, 1996.

Lingen Chen, F. Sun and C. Wu, Performance analysis for a real closed regenerated Brayton cycle via methods of finite-time thermodynamics, *International Journal of Ambient Energy*, **20**(2), 95-104, 1999.

Lingen Chen, F. Sun and C. Wu, Performance analysis of a closed regenerated Brayton heat pump with internal irreversibility, *International Journal of Energy Research*, **23**,1039-1050, 1999.

Lingen Chen, F. Sun and C.Wu, Optimum distribution of heat exchanger inventory for power density optimization of an endoreversible closed Brayton cycle, *Journal of Physics D: Applied Physics*, **34**(3), 422-427, 2001.

Lingen Chen, F. Sun and C.Wu, Performance of heat transfer irreversible regenerated Brayton refrigerators, *Journal of Physics D: Applied Physics,* **34**(5), 830-837, 2001.

Lingen Chen, F. Sun and C.Wu, Power density analysis and optimization of a regenerated closed variable temperature heat reservoir Brayton cycle, *Journal of Physics D: Applied Physics*, **34**(11), 1727-1739, 2001.

Lingen Chen, F. Sun and C.Wu, Power density optimization for an irreversible closed Brayton cycle, *Open Systems and Information Dynamics, Open Systems and Information Dynamics,* **8**(3), 241-260, 2001.

Lingen Chen, F. Sun and C.Wu, Performance comparison of an endoreversible closed variable-temperature heat reservoir Brayton cycle under maximum power density and maximum power conditions, *Energy Conversion and Management*, **43**(1), 33-43, 2002.

Lingen Chen, F. Sun and C.Wu, Performance comparison of an irreversible closed Brayton cycle under maximum power density and maximum power conditions, *Exergy*, *an International Journal,* **2**(4), 345-351, 2002.

Lingen Chen, F. Sun and C.Wu, Cooling load density optimization of an irreversible simple Brayton refrigerator, *Open Systems and Information Dynamics,* **9**(4), 325-337, 2002.

Lingen Chen, F. Sun and C.Wu, Performance analysis for an irreversible closed variable temperature heat reservoir intercooled regenerated Brayton cycle, *Energy Conversion and Management*, **44**(17), 2713-2732, 2003.

Lingen Chen, F. Sun and C.Wu, Power and efficiency analysis of an endoreversible closed intercooled regenerated Brayton cycle, *international Journal of Exergy*, **1**(4), 475-494, 2004.

Lingen Chen, F. Sun and C.Wu, Important optimum criteria on the performance parameters of an irreversible Brayton heat engine, *International Journal of Ambient Energy*, **26**(1), 37-44, 2005.

Lingen Chen, F. Sun and C.Wu, Power optimization of an irreversible closed intercooled regenerated Brayton cycle coupled to variable-temperature heat reservoirs, *Applied Thermal Engineering*, **25**(8-9), 1097-1114, 2005.

Lingen Chen, F. Sun and C.Wu, Power optimization of an endoreversible closed intercooled regenerated Brayton cycle coupled to variable-temperature heat reservoirs, *Applied Energy*, **82**(2), 183-197, 2005.

Rankine Cycle

Wu, C., Power optimization of a finite-time Rankine heat engine, *International Journal of Heat and Fluid Flow*, **10**(2), 134-138, 1989.

Wu, C., Intelligent computer aided design on optimization of specific power of finite-time Rankine cycle using CyclePad, *Journal of Computer Application in Engineering Education*, **6**(1), 9-13, 1998.

Other finite time thermodynamic cycle literature including Atkinson, Combined and Cascaded, Diesel, Dual, Ericsson, Otto, Rallis, and Stirling cycles are provided in the following

Atkinson Cycle

Lingen Chen, F. Sun and C. Wu, Efficiency of an Atkinson engine at maximum power density, *Energy Conversion and Management*, **39**(3/4), 337-342, 1998.

Braysson Cycle

Lingen Chen, F. Sun and C.Wu, Exergy analysis for a Braysson cycle, *Exergy*, *an International Journal*, **1**(1), 41-45, 2001.

Lingen Chen, F. Sun and C.Wu, Power, power density and efficiency optimization of an endoreversible Braysson cycle, *Exergy*, *an International Journal,* **2**(4), 380-386, 2002.

Lingen Chen, F. Sun and C.Wu, Power and efficiency performance of an endoreversible Braysson cycle, *International Journal of Thermal Science*, **41**(2), 201-205, 2002.

Effects of heat transfer and friction on the performance of an irreversible air standard Miller cycle, *International Communication of Heat and Mass Transfer*, **32**(8), 1045-1056, 2005.

Combined and Cascaded Cycle

Wu, C., G. Karpouzian and R.L. Kiang,, The optimal power performance of an endo-reversible Combined cycle, *Journal of the Institute of Energy*, **30**(3), 41-45, 1992.

Wu, C., Power performance of a cascade Endo-reversible cycle, *Energy Conversion and Management*, **65**(462), 41-45, 1990.

Wu, C., Maximum obtainable power of a Carnot combined power plant, *Heat Recovery Systems and CHP*, **15**(4), 351-355, 1995.

Chen Jincan and C. Wu, Maximum specific power output of a two-stage endo-reversible Combined cycle, *Energy:The International Journal*, **20**(4), 305-309, 1995.

Wu, C., Performance of a cascade endo-reversible heat pump system, *The Institute of Energy Journal*, **68**(476), 137-141, 1995.

Wu, C., Finite-time thermodynamic analysis of a two-stage combined heat pump system, International *Journal of Ambient Energy*, **16**(4), 205-208, 1995.

Chen Jincan and C. Wu, General performance characteristics of a N-stage endo-reversible combined power cycle system at maximum specific power output, *Energy Conversion and Management*, **37**(9), 1401-1406, 1996.

Lingen Chen, F. Sun and C.Wu, The equivalent cycles of an n-stage irreversible combined refrigeration system, *International Journal of Ambient Energy*, **18**(4), 197-204, 1997.

Wu, C., Intelligent computer aided analysis of a Rankine/Rankine combined cycle, International *Journal of Energy, Environment and Economics*, **7**(2), 239-244, 1998.

Lingen Chen, F. Sun and C.Wu, A generalized model of a combined refrigeration cycle and its performance, *International Journal of Thermal Sciences (Revue Generale de Thermique)*, **38**(8), 712-718, 1999.

Jincan Chen and C.Wu, Thermoeconomic analysis on the performance characteristics of a multi-stage irreversible combined heat pump system, *ASME Journal of Energy Resources Technology*, **122**(4), 212-216, 2000.

Lingen Chen, F. Sun and C.Wu, Optimization of the rate of exergy output of a multi-stage endoreversible combined refrigeration system, *Exergy*, *an International Journal*, **1**(2), 100-106, 2001.

Diesel Cycle

Wu, C. and D.A. Blank, The effect of combustion on a power optimized endo-reversible Diesel cycle, *Energy Conversion and Management*, **34**(6), 493-498, 1993.

Lingen Chen and C.Wu, Heat transfer effect on the net work and/or power versus efficiency characteristics for the air standard Diesel cycles, *Energy: The International Journal*, **21**(12), 1201-1205, 1996.

Dual Cycle

Wu, C. and D.A. Blank, The effect of combustion on a power optimized endo-reversible Dual cycle, *International Journal of Power and Energy Systems*, **14**(3), 98-103, 1994.

Lingen Chen, F. Sun and C.Wu, Finite thermodynamics performance of a Dual cycle, International *Journal of Energy Research*, **23**(9), 765-772, 1999.

Lingen Chen, F. Sun and C.Wu, Effect of friction on the performance of Dual cycle, *Exergy*, *an International Journal,* **2**(4), 340-344, 2002.

Lingen Chen, F. Sun and C.Wu, Optimum performance of an irreversible Dual cycle, *Applied Energy*, **79**(1), 3-14, 2004.

Ericsson Cycle

Blank, D.A. and C. Wu, Performance potential of a terrestrial solar-radiant Ericsson power cycle from finite-time thermodynamics, *International Power and Energy Systems,* **15**(2), 78-84, 1995.

Blank, D.A. and C. Wu, Power limit of an endo-reversible Ericsson cycle with regeneration, *Energy Conversion and Management*, **37**(1), 59-66, 1996.

Lingen Chen, F. Sun and C.Wu, Cooling and heating rate limits of a reversed reciprocating Ericsson cycle at steady state, *Proceedings of the Institute of Mechanical Engineers, Part A, Journal of Power and Energy*, **214**, 75-85, 2000.

Lingen Chen, F. Sun and C.Wu, Cooling and heating rate limits of a reversed reciprocating Ericsson cycle at steady state, *Proceedings of the Institute of Mechanical Engineers, Part A, Journal of Power and Energy*, **214**, 75-85, 2000.

Lingen Chen, F. Sun and C.Wu, Heat transfer effect on the performance of a magnetic Ericsson refrigerator, *Journal of Non-Equilibrium Thermodynamics*, **27**, 57-69, 2002.

Lingen Chen, F. Sun and C.Wu, Optimization on the performance characteristics of a magnetic Ericsson refrigeration cycle affected by multi-irreversibilities, ASME Journal of Energy Resources Technology, **125**(4), 318-324, 2003.

Miller Cycle

Wu, C., Performance analysis and optimization of a supercharged Miller cycle Otto engine, *Applied Thermal Engineering,* **23**(5), 511-521, 2003.

Mirror Cycle

Wu, C., Performance analysis of a mirror gas turbine with split-shaft engine, *International Journal of Engineering Science and Technology*, **3**(1), 17-26, 2003.

Otto Cycle

Wu, C. and D.A. Blank, The effect of combustion on a work optimized endo-reversible Otto cycle, *Journal of the Institute of Energy*, **65**(463), 86-89, 1992.

Lingen Chen, F. Sun and C. Wu, Heat transfer effects on the net work output and efficiency characteristic for an air-standard Otto cycles, *Energy Conversion and Management*, **39**(7), 643-648, 1998.

Lingen Chen, F. Sun and C.Wu, The effects of variable specific heats of working fluid on the performance of an irreversible Otto cycle, *International Journal of Exergy*, **2**(3), 274-283, 2005.

Rallis Cycle

Wu, C., Analysis of an endo-reversible Rallis cooler, *Energy Conversion and Management*, **35**(1), 79-85, 1994.

Stirling Cycle

Wu, C., Analysis of an endo-reversible Stirling cooler, *Energy Conversion and Management*, **34**(12), 1249-1253, 1993.

Blank, D.A. and C. Wu, Power optimization of an endo-reversible Stirling cycle with regeneration, *Energy: The International Journal*, **19**(1), 125-133, 1994.

Blank, D.A. and C. Wu, Power optimization of an extra-terrestrial, solar radiant Stirling heat engine, *Energy:The International Journal*, **20**(6), 523-530, 1995.

Lingen Chen, C. Wu and F. Sun, Optimum performance of irreversible Stirling engine with imperfect regeneration, *Energy Conversion and management*, **39**(8), 727-732, 1998.

Lingen Chen, C. Wu and F. Sun, Optimal performance of an irreversible Stirling cryocooler, *International Journal of Ambient Energy*, **20**(1), 39-44, 1999.

Lingen Chen, C. Wu and F. Sun, Performance characteristic of an endo-reversible Stirling refrigerator, *International Journal of Power and Energy Systems*, **19**(1), 79-82, 1999.

Lingen Chen, F. Sun and C. Wu, Finite time exergoeconomic performance bound for a quantum Stirling engine, *International Journal of Engineering Science*, **38**(2), 239-247, 2000.

Lingen Chen, F. Sun and C. Wu, Optimal zone on the performance of a generalized irreversible magnetic Stirling refrigerator, *Open Systems and Information Dynamics,* **8**(3), 291-301, 2001.

Lingen Chen, F. Sun and C. Wu, Ecological optimization of an irreversible Stirling heat engine, *International Journal of Ambient Energy*, **22**(4), 211-220, 2001.

Lingen Chen, F. Sun and C. Wu, Optimization of irreversible magnetic Stirling cryocoolers, *International Journal of Engineering Science,* **39**(4), 361-368, 2001.

Lingen Chen, F. Sun and C. Wu, Performance characteristics of a magnetic Stirling cooler, *International Journal of Energy Research,* **26**(3), 217-228, 2002.

13.13. SUMMARY

Maximum efficiency and maximum coefficient of performance are not necessarily the primary concern in design of a real cycle. Net power output and specific net power output in a heat engine, cooling load and specific cooling load in a refrigerator, and heating load and specific heating load in a heat pump are probably more important in industrial design of thermodynamic cycles. A different criteria of real cycle performance is provided by finite time thermodynamics. The basic finite time thermodynamic cycles are Carnot, Brayton and Rankine cycles. Literature concerning other finite time thermodynamic cycles are also provided in this chapter.

REFERENCES

Balmer, Robert T., *Thermodynamics*, West Publishing Co., New York, 1990.

Balzhiser, Richard E. and Michael R. Samuels, *Engineering Thermodynamics*, Prentice-Hall Publishing Co., New Jersey, 1977.

Black, William Z, and James G. Hartley, *Thermodynamics*, Third Edition, Harper-Collins College Publishers, New York, 1998.

Cengel, Yunus A. and Michael A. Boles, *Thermodynamics: An Engineering Approach,* Third Edition, McGraw-Hill Publishing Co., New York, 1998.

Granet, Irving and Maurice Bluestein, *Thermodynamics and Heat Power*, Sixth Edition, Prentice-Hall Publishing Co., New Jersey, 2000.

Haberman, William, L. and James E.A. John, *Engineering Thermodynamics*, Allen and Bacon, Inc., Boston, 1980.

Huang, Francis F., Engineering *Thermodynamics, Fundamentals and Applications*, MacMillian Publishing Co., New York, 1976.

Moran, Michael, J. and Howard N. Shapiro, *Fundamentals of Thermodynamics*, Fourth Edition, John Wiley and Sons Publishing Co., New York, 2000.

Rogers, G.F.C. and Y.R. Mayhew, *Engineering Thermodynamics, Work and Heat Transfer,* Fourth Edition, Addison Wesley Longman Ltd, Essex, England, 1992.

Sonntag, Richard E., Claus Borgnakke, and Gordon J. Van Wylen, *Fundamentals of Thermodynamics*, Fifth Edition, John Wiley and Sons Publishing Co., New York, 1998.

Wark, Kenneth, Jr. and Donald E. Richards, *Thermodynamics*, Sixth Edition, McGraw-Hill Publishing Co., New York, 1999.

Wu, Chih, Lingen Chen and Jincan Chen, *Recent Advances in Finite Time Thermodynamics*, Nova Science Publishing Co., New York, 1999.

Wu, Chih, *Thermodynamic cycles: computer-aided design and optimization*, Marcel-Dekker Publ. Inc., New York, 2004.

INDEX