Development of a Sail-Powered Autonomous Surface Vessel (ASV) for Trans-Atlantic Voyaging

Christopher Blevens, Matt Debbink, Thomas Deeter, Matthew Hamlet, Matthew Harmon, Cody Keef, Paul Miller, Mark Nicholson, Tres Penny, Sean Rohrs, Nick Tashner

Contact: phmiller@usna.edu

United States Naval Academy, Annapolis, Maryland, USA

Fig. 1 Boat #4 sailing at the 2011 International SailBot Regatta, June 2011.

Abstract

This paper details the USNA SailBot research and development of a sail-powered autonomous surface vessel for a Trans-Atlantic voyage. The new design, Boat #4 ("Spirit of Annapolis") differs in many ways from the three previous SailBots designed by USNA teams in order to meet its new challenges. A detailed description of the naval architecture and systems engineering behind the development is presented, along with changes made to Boat #3 ("Gill the Boat") to help improve its performance before the 2011 World Robotic Sailing Championship.

Presented at the 4th International Robotic Sailing Conference, Lubeck, Germany, 16-17 August 2011

Introduction

In recent years the interest in autonomous surface vessels (ASV) has grown due to important missions such as surveillance, monitoring, and oceanographic research these craft can be developed to perform. Eric Berzins, an engineering student at the University of British Columbia, developed a small, sail-powered ASV in 2004. His demonstration of the applicability of sail power to propel ASV's sparked the beginning of the International SailBot Regatta, which has held competitions among universities in North America in 2006, and 2008-11. SailBot rules require boats be no more than two meters in length, three meters in beam (allowing for multihulls), one and a half meters in draft, and five meters in height from the bottom of the keel to the top of the fixed mast (not including wind instruments)(1). The relatively small size allows for easy transportation and handling on shore while also keeping the construction and shipping costs down. The SailBot competition includes a design presentation and on-the-water events that test navigation, station keeping, performance, and endurance(2).

The United States Naval Academy (USNA) founded a team in 2007. The team currently comprises of students majoring in naval architecture, oceanography and systems engineering. Since its beginning, the USNA SailBot team has competed in the International SailBot Regatta and in 2009 and 2010 competed in the World Robotic Sailing Championship (WRSC)(3).

In past years the sole mission was to win the SailBot competitions, but, for the first time ever, the team has primarily focused on sending a sail-powered ASV across the Atlantic Ocean in addition to competing in the International Sailbot Regatta. Although it still meets the SailBot Class Rules, the new Trans-Atlantic mission required significant deviations from the three previous USNA sailbot designs.

Vessel Description—Naval Architecture

Approaching the Trans-Atlantic challenge brought up many issues not previously considered in USNA SailBot designs. Additionally, since previous boats were designed for a scope of wind, wave, and weather conditions for moderate inshore sites (3), many previously successful design characteristics were changed. This year's design required practical characteristics suited for operation in inland, coastal, and oceanic waters. New challenges include larger battery capacity, more robust systems, and increased boat displacement, strength, and reliability. The boat must also survive harsh conditions, avoid weed entanglement, and finish the voyage quickly.

The team saw immediately that a radically design-altering requirement was that the underwater form must avoid entangling floating weeds or other debris. With estimated voyage times ranging from several weeks to over a month, chances of fouling on floating weeds, grass, or other impediments are high. After reviewing previous test data (4), it was determined that a 30 degree angle sweep for both the hull and keel was required to adequately shed weeds and cables, which resulted in a unique hull-form for Boat #4. At the same time, switching to

an oceanic mission required more stability and strength, while significantly reducing the number of moving parts to increase reliability. Thus, a new voyaging hull shape and rig design, new actuators, voyaging sails, and higher strength materials were set as initial design goals, each needing their own separate research and development. However, adding more reliable, conservative (and heavy) components significantly reduced the boat speed, increasing the time to complete voyages; thus, the team strove for an adequate balance between performance and reliability.

The team's primary tool for researching performance and reliability trade-offs was a spreadsheet-based velocity prediction program (VPP) named "PCSail"(5). The VPP takes input values for the boat's projected dimensions, along with basic hydrostatic information and constants, to create a model of the boat that it can analyze. Using a range of headings and wind speed, the VPP calculates the projected moments and forces on the boat, then finally solves for an equilibrium condition of motion for each heading and wind speed condition. It uses the data to estimate the design's time around a simulated mile-long, circular course. Thus, by varying input hull parameters and coefficients in the VPP, the team compared course times from many proposed SailBot designs and derived a hull shape which met the mission requirements while attaining the most performance and speed.

The team examined the effects and trends of variations in waterline beam, prismatic coefficient, righting moment, displacement, canoe body draft, keel root and tip chord length, and bulb length. By varying only one characteristic at a time, the team discovered which trends had the largest relative impact on performance.

The graph of the compiled results (Fig. 2) shows the relative effect of each variable studied and allowed the team to decide which hull characteristics had the largest, desirable effects on boat speed. Some of the variables, such as prismatic coefficient, bulb length, and keel root and tip chord lengths, had little effect on the design and became secondary considerations; however, variations in righting moment, canoe body draft, displacement, and beam had significant impact. These studies were the single largest influence on the final hull-form, keel, and bulb of boat #4. After the initial trend studies were complete, more than two dozen complete hull designs were developed based on the key performance trends.

The largest key factor in boat #4 was righting moment. The righting moment of a sailboat is a measure of the boat's ability to stay upright, which if sail-powered, means the ability to withstand the combined forces of wind and water. Along with hull-form, it is highly dependent on the weight and location of every part in the design. The VPP study showed that an increase in righting moment results in a very significant increase in the speed and performance of the boat. Thus, it was highly beneficial to design the new SailBot with a large righting moment. Consequently, the center of gravity was designed as low as possible; one example is that the bulb, which weighs over 40% of the total displacement, was placed at the very bottom of the keel. Since this bulb placement also has excellent effects on the seaworthiness of the design, helped meet two design requirements at once.

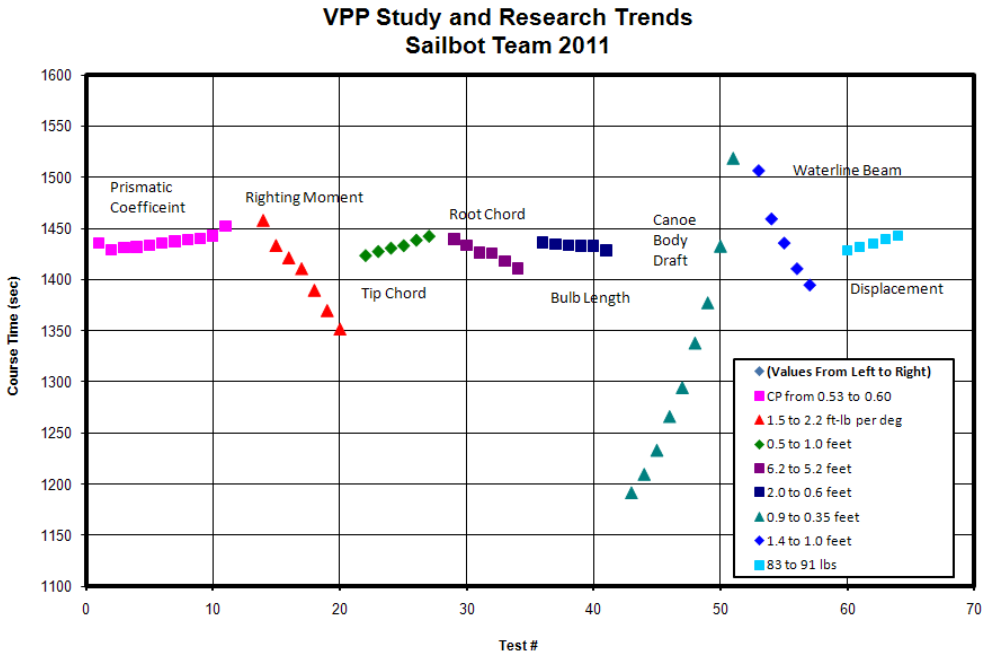

Fig. 2 The relative effect of key variables in boat design. A steeper curve indicates greater impact on performance.

The next most influential design characteristic to improve speed was canoe body draft. With the previous USNA SailBot designs having less than 10 cm of canoe draft, the team decided to examine the effects of deeper draft on performance. The VPP study showed that deeper hull draft allowed the boat to decrease residuary resistance (primarily wavemaking), increasing speed, at the cost of additional volume. Since increasing the underwater volume with a deeper canoe body draft can most easily be negated by decreasing waterline beam, there is limit to the effectiveness of a deeper canoe body draft, which is around 18 cm for our desired sea keeping characteristics. This resulted in steep deadrise

With the new voyaging design, large deck area is needed to accommodate solar panels, requiring a minimum deck beam of 48 cm. This set the design canoe body draft at 16.0 cm, which gave the best performance while achieving the required minimum deck beam.

By changing the waterline beam in the VPP, it was obvious that increasing the beam increased the course time; thus, a smaller beam is faster. However, this value has a practical limit for the design due to the previously established minimum deck beam, stability, and underwater volume. The solution is to make the waterline beam no wider than absolutely necessary.

To test the effect of changes in displacement, small variations in displacement were made at the Center of Gravity, thus making it a pure displacement study, without the effects of changing righting moments. The VPP results show that an increase in displacement results in a slower boat, but only by a surprisingly insignificant eleven seconds per mile per kilogram added (within reason!).

The final selected boat for production was designed to maximize righting moment and canoe body draft, and minimize waterline beam. The team ran the finished design through the VPP and received a final predicted time of 1,301 seconds for the circular mile course—almost 250 seconds slower than the 3 previous, non-voyaging SailBots' times, and yet 125 seconds faster than the initial baseline design's time the team began with. Figure 3 shows the hull lines of Boat #4.

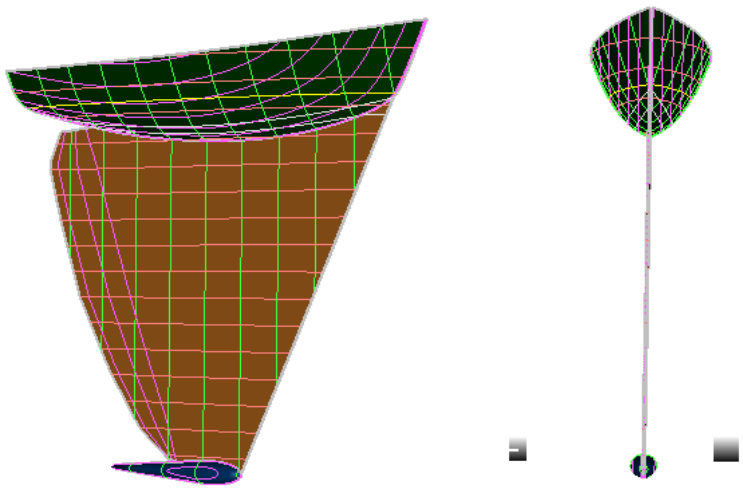

Fig. 3 Lines of Boat #4 showing key design features of narrow waterline, wide deck and full keel.

To construct this hull, the team used a 3-axis routing machine in the USNA shop to carve the hull and four bulkheads out of block of 0.29 g/cm^3, high density foam to be used as a core. The foam core is one centimeter thick and is layered inside and out with one ply of #282 (200g/m2) carbon fiber cloth and epoxy resin to produce a high section modulus, low weight structure. Although not completely watertight from one compartment to the next, since holes have been cut in the bulkheads for electronics, all through-holes are as close to the deck as possible to prevent water transfer in case of damage. The aft-most compartment is watertight and provides enough buoyancy to remain afloat if the main compartment is flooded.

The deck was attached later with the same technique, but using a much lighter, end grain balsa core to save weight. Inside, small fiberglass decks to support batte-

ries and electronics were attached as low in the hull as possible to increase righting moment and stability. In total, the hull alone weighs 8.2 kg.

Unlike previous USNA SailBot versions, the keel for boat #4 was not able to be designed from high strength stainless steel. Instead, the initial design called for an airfoil shaped full keel made from the same high density foam and carbon as the hull. Unfortunately, the USNA shop was unable to complete the task, and the material was switched to 9 mm thick marine grade Okoume plywood, which has low water absorption and high strength. The new keel is not an airfoil shape, but does have a rounded leading edge and a slightly tapered trailing edge. Due to the large size of the full keel, an 8'X4' sheet of Okoume was cut into two pieces and joined with a single lap joint. Also, the grain of the two outer and middle vaneers of the plywood run vertically through the keel to align the highest tension and compression loads on the keel with the strongest directional strength of the plywood. The team did quantitative strength and bending analysis for the Okoume, and found that it was strong enough to meet strength requirements without carbon fiber, but was not stiff enough to pass our deflection requirement. Thus, the keel is stiffened with two plies of 300 g/m^2 uni-directional fiberglass cloth and is attached to the hull two plies of #282 carbon fiber. Figure 4 shows the keel bonded prior to painting.

Fig. 4 Boat #4's hull, keel, rudder, and bulb.

Another major consideration of the keel assembly is the rudder. Due to the weed shedding requirement in the mission, a full rudder connected closely to the keel's trailing edge was designed. Since the full keel makes the boat very directionally stable and because full keel rudders have low efficiency, a large rudder area is required for adequate control of the boat. The rudder was created using the same method as the keel, with Okoume plywood and a fiberglass coating. The leading edge of the rudder was filed down and an eight mm silicon bronze rod was attached as the rudder stock. A fiberglass tube was run through the hull and sealed, allowing the rudder stock to be controlled from the deck without any chance of

water leakage in to the hull. The rudder is controlled using a bronze tiller arm assembly attached just above the deck. The entire keel and rudder assembly weighs 6.1 kg, and extends the bulb 1.5 meters below the waterline.

Boat #4's bulb is her primary source of stability, which increases performance. It is placed as low as possible on the keel while not exceeding the SailBot class restriction of a maximum draft of one and a half meters. The bulb is constructed of lead shot and epoxy in order to increase the weight per wetted surface area ratio and create its desired shape without the need to cast a pure lead bulb. Because of the low Reynold's numbers expected while sailing, the team chose a turbulent section shape to minimize resistance. It has a rounded leading edge which tapers aft into a beaver tail and has a depth to width ratio of 0.88. The purpose of these characteristics is to increase the stability while minimizing drag and maximizing durability and ease of fabrication. The bulb weighs 19.5 kg, is 67 cm long, 9.1 cm in depth, and 10.4 cm in width.

Boat #4 deviates from modern manned sailboats in the fact it can only trim the sail using its main sheet. On a manned sailboat, trim is just one of the many controls that can change the shape of the sail—to power or depower it—depending on the wind condition. Because Boat #4 does not have an adjustable backstay, halyard (to reef), forestay, outhaul, leech chord, traveler, or Cunningham (to name just a few controls a sailor can employ), she will have to handle a large range of wind conditions with only one sail during her Trans-Atlantic voyage. For comparison, a manned sailboat doing a crossing the Atlantic may carry as many as fifteen different sails, which can be combined in many different configurations to deal with any wind condition. The chosen rig, therefore, must be versatile enough to make it across the Atlantic on its own with a minimum of adjustment.

Boat #4's rig was designed with two criteria; performance and reliability. Performance was predicted using similar VPP studies described above and were conducted to determine the sail area required to be manageable during 30 knot winds, the highest wind speed expected during the voyage. More studies were conducted to determine the advantages and disadvantages of various rig configurations. It was discovered that as the rig height and aspect ratio increased, the rig would generate more lift, but would also heel more and depower. It was also determined that a boom longer than 91 cm would likely dip into the water during large angles of heel, thus increasing the resistance tremendously and causing a yaw moment that could cripple the boat's controllability.

To improve reliability the number of movable parts and joints were minimized and the number of free edges on the sail was kept to just one. The final compromise of these factors drew the design team to a 1.94 m^2 fixed gaff rig with a 91 cm boom and a 274 cm tall mast. For high durability it is made of high strength carbon and fiberglass tubes laminated together to create a single, unstayed, rotating mast stepped in a fiberglass tube laminated to the hull and deck. Figure 5 shows the basic rig with short extensions to the boom and gaff to allow for a larger sail in light wind trials.

Fig. 5 Boat #4's light air rig, minus the later-added swing rig jib.

The sailcloth used to date was selected of availability to the team and will be replaced with a more robust woven cloth prior to any long-distance voyages. A soft-sail was selected for light weight, ease of construction, good lift coefficients and all wind angles and proven reliability. The sail was designed and built by the team. The five panels were broadseamed with double sided sail tape and sewn for added strength. The tack, head, and clew of the sail were strengthened with sail tape, and fiberglass battens were cut to a calculated length and fastened. Finally, grommets were added to each corner of the sail and along the luff to connect it to the rig.

After testing, it was determined that while the larger main significantly improved light air performance, it created an imbalance in the center of effort and center of lateral resistance. More sail area was needed forward to effectively sail the boat. Overall the following modifications were made in creating a light air rig for local testing: a larger, light-air sail with more area and a jib were sewn; removable extension tubes were created which slide inside the boom and gaff to fit the new mainsail; and an aluminum jib boom was connected to the main boom to support the new jib. The new light-air sail and jib area is 3.00 m^2, a 55% increase in area from the voyaging rig. The new additions are easily removable and will not be used during the trans-Atlantic voyage.

Boat #4’s deck layout was designed using computer aided drawing software to ensure precise placement of all deck components. The components include a Harken track system, two Ronstan blocks, a Ronstan fairlead, a fiberglass mast step, two handles for ease of carrying, a bronze tiller arm, two through-deck linear electric actuators, and Holt Allen circular hatches above the first, third and fourth

compartments. Underneath the components which must carry high loads (the Harken track, the Ronstan blocks, the Ronstan fairlead, and the two handles), the deck is reinforced with ¼ inch thick G10 fiberglass or ¼ inch carbon plating. In addition to providing load support, the composite plates provide extra watertight integrity in each place where screws penetrate the deck. Also, the hatches will be sealed off with epoxy prior to the trans-Atlantic voyage for extra watertight integrity.

Boat #4 was launched just a few days prior to the SailBot regatta in June 2011. Her final characteristics are shown in Table 1.While ungainly looking, her on-the-water performance was reassuring and she performed better than expected. Unfortunately the added sail area became a liability in the last race when the breeze built to 15 knots and her large rig overpowered her rudder, which was sized for the smaller sail. She developed control problems and performed a violent jibe which resulted in the failure of the light-air gaff extension. Nonetheless, she returned to shore unassisted. The rudder area was subsequently increased, which then led to the decision to increase the rudder shaft diameter from eight to ten millimeters.

Table 1 Principal Characterists of USNA Boats 3 and 4

		Boat 3	Boat 4
LOA	m	2	2
LWL	m	2	1.86
Beam	m	0.305	0.33
Draft	m	1.5	1.5
Depth	m	0.31	0.43
Sail Area	m2	3.1	1.9/2.9
Disp	kg	29.9	52.2
Cp		0.56	0.54
LCB		55%	50%
LCF		58%	54%
"SA/Disp"		32.4	13/24
"Disp/L"		104	226

As an additional measure to ensure the success of the voyaging mission, a Naval Academy Oceanography student was added to the team this year to help with route planning and to predict conditions and expected winds for the route. As the small physical size and range of capabilities for SailBot is a very real concern in trans-oceanic voyaging, matching the boat's capabilities with the route's sailing conditions is critical. Using the expected size, style, and strengths of the boat at the outset of the project, the team calculated the most favorable wind, current, and heading conditions for a successful voyage. This involved extensive research into the seasonal wind, current, and weather trends for all possible routes. Utilizing both modern sailing software and climatological data presented in NOAA Pilot

Charts used for long-range route planning, favorable wind and current combinations were determined and used to generate routes giving the best chance of success. Once completed, the remaining possible routes were analyzed by date and location for seasonal weather such as hurricanes, ice flows, and severe storms or extreme wave conditions. Finally, all shipping routes and traffic patterns were added into the criteria, decreasing the chance of a damaging collision during the voyage. Using these methods the team was able to select two voyaging routes which give the highest probability of favorable winds for a successful voyage (6).

In addition to preparing Boat #4 for her SailBot Regatta and Trans-Atlantic voyage, the team made several changes to Boat #3 in order to increase her performance in the SailBot Regatta. Boat #3 suffered a 7% unplanned weight gain during her construction. The items included an extra 0.45 kilograms of lead in the bulb, a heavier keel than estimated, and the addition of tank tops for gear placement. Because of her relatively small water plane area, this caused 11 mm of sinkage and an increase in prismatic coefficient from 0.56 to 0.59. The increase in prismatic coefficient means more energy lost to residuary resistance, while the sinkage causes an increase in wetted surface area which increases frictional resistance and the greater beam and transom immersion increased the residuary resistance. The combined effect of the weight gain was a slower sailing boat than expected (7).

The goal of the SailBot team following the 2010 WRSC was to remove two kilograms of excess weight from Boat #3. To accomplish this, 3.8 centimeters of freeboard was removed from midships aft, a lightening hole was cut into the top of the keel and was filled with light-weight foam, a voyaging rig was made which had a shorter luff, and the aft deck was rebuilt using 2mm core and 3.7 oz. carbon instead of the heavier 3mm core and 5.8 oz. carbon used before. The net result was a 1.81kilogram reduction in weight, which was close to, but did not meet, our goal of 2 kilograms weight reduction. A switch from NiMH to lithium iron phosphate batteries gave us the remaining weight savings.

In addition, in order to effectively sail in the shallow waters of the 2011 WRSC in Luebeck, a new keel and bulb with a maximum draft of 1m was built for Boat #3.

Vessel Description—Systems

This year's systems engineering team was tasked with providing working systems for both Boat #3, for competitions such as SailBot and WRSC, and Boat #4, for SailBot and the trans-Atlantic voyage. A majority of the time spent by the systems team was used to work on Boat #3, improving her system to make it more reliable and robust. Once Boat #4 was ready for sea trials, the system design that already existed from previous years' work was built upon and installed.

Boat #4's system consists of 3 major components: Processing, Sensing, and Actuation (Fig 6). The original design for Boat #3 involved using the Rabbit

Navboard 3000 as its processing unit (Fig 7). Since Boat #4's system and the new system for Boat #3 are both more evolved versions of Boat #3's old system, the Rabbit Navboard 3000 is still used in both boats. The Rabbit processor is capable of taking in multiple inputs from different sensors, both analog and digital, then using those inputs to calculate algorithms and in turn send out control signals to multiple actuators or back to the sensors. The Navboard 3000 also has a built-in Trimble Lassen GPS with an antenna running out and attached to the underside of a translucent hatch cover with enough transparency to allow satellite signals to pass through.

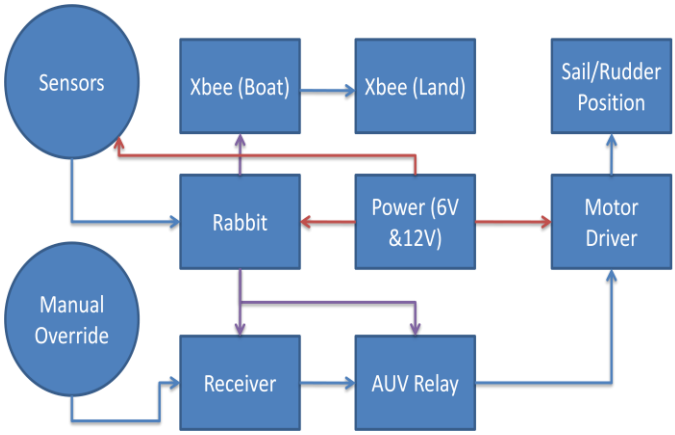

Fig. 6 System control loop.

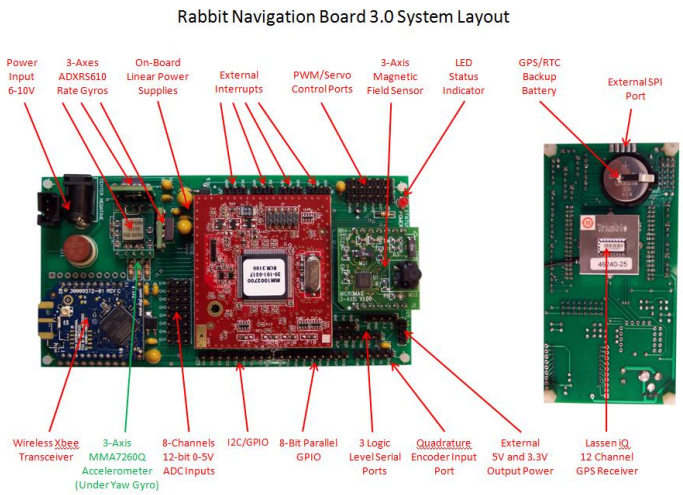

Fig. 7 Rabbit Navigation Board 3.0 System Layout

For sensing the sailing environment, the systems team originally settled on using the Airmar WeatherStation PB200 as our main sensor. The Airmar is capable of providing GPS position, True and Magnetic heading, along with True and Apparent wind angles all in a small package. For the time that the Airmar was used, it worked well for providing data, but placing the Airmar at the top of the mast decreased sailing performance too much due to its weight and windage and was removed from Boat #3; however, the Airmar will be used on the considerably more stable Boat #4 because due to its greater reliability over the rotating windvane designs. Due to Boat #4's rotating mast the Airmar is located on a fixed antenna mast mounted near the stern. Boat #3 now uses a lightweight weather vane system that consists of a birdie attached to an optical encoder, sitting at the top of the mast. The optical encoder provides nearly frictionless motion and an accurate apparent wind angle, along with being lightweight enough to not cause any noticeable decrease in sailing performance. Lastly, our heading sensor is a magnetic compass made by Airmar which provides magnetic heading.

Despite the similarities in processors and sensors, the actuators for the two systems are widely different; Boat #3 uses a high-powered hobby servo for rudder control and uses an RMG SmartWinch for sail control. The hobby servo takes in a simple Pulse Width Modulation signal from the Rabbit and translates that into an angle position. The SmartWinch takes a digital signal from the Rabbit and translates it into a position as well. Since Boat #4 will be travelling long distances and her actuators may encounter potentially heavy loads, it was decided to move to linear actuators. The linear actuators (Fig. 8) are much larger and are more aptly suited for Boat #4's size and have a clear mechanical advantage over Boat #3's actuators while also providing a more watertight deck penetration via Morse cables. The linear servos, from ServoCity, have built in worm gears which prevent them from back-driving while not under power. This simple setup will be a huge power saver as the boat makes her voyage across the Atlantic.

Fig. 8 Linear actuators used to control rudder and sail on Boat #4.

Other major differences between the two systems include the power systems, Boat #3 runs on two, 6V Lithium Iron batteries and Boat #4 runs on a similar battery material, but at the 12V level. Nearly everything on Boat #3 runs on 6V with

the exception of the Airmar Compass, which runs on 12V; a simple voltage step-up circuit accounts for this difference. The SmartWinch draws a large amount of power but with 36 Amp-hrs between the two lithium iron batteries on board, there is little concern of draining the batteries during competition. For Boat #4, the systems team is looking into lithium core batteries that are solar recharge capable in order to increase the lifespan of the power system. With Boat #4's systems all running on 12V power, it will be more difficult to find reliable solar recharge panels that can provide enough current to recharge the 12V batteries.

In addition to the main systems, the systems team has also added a few extra components to make the both boats' system better. The first addition is the Futaba Remote Controller and a relay board built in-house. This system is required for the SailBot and WRSC competitions for safety, but also allows for ease of use when testing or preparing for competition events. Every signal sent to an actuator runs through the relay board before being sent out to the motor. This allows the boats to be programmed to think that, whenever she is not receiving a signal from the remote control, she should perform her autonomous programming; but, with the flick of a switch the boat is immediately in the hands of the user.

Another component used in both boats is an Xbee wireless transmitter. It is used to send data from the boat to a shore computer in order to see what the boat is thinking. The Xbee (Fig. 9) is rated to provide a data transmission range of up to 2 miles at a frequency of 2.4 GHz, but so far it has only been tested successfully to 800 meters on the water.

Fig 9 XBee wireless transmitter used to communicate from sea to shore.

The newest addition to the Boat #3's system is a collision avoidance system. It consists of two ultrasonic range sensors mounted on a mast at the bow, each facing three degrees off center to provide enough beam width to detect anything in front of the boat up to 25 feet. When she detects something, she then turns appropriately to avoid the obstacle.

To save power and allow time for the solar panels to recharge her batteries, a self steering system will be attached to the stern of Boat #4. The system consists of six main parts: a carbon frame for support, a lightweight wind vane, an auxiliary rudder, a pair of gears, a spring loaded pin, and an actuator to pull the pin.

The self steering rig works by aligning the wind vane to the desired apparent wind heading and then setting the pin to lock the wind vane to the gear train. The gears then cause the auxiliary rudder to rotate in the opposite direction of the wind vane. The effect is near-instantaneous course correction so that the boat is always sailing with the same apparent wind heading. As long as the wind heading is constant (which is likely in the open ocean) and the current is not significant, the Boat #4 will keep its heading without the use of power-draining electric components. At regular intervals the navigation programming will check and correct the course by clutching in the rudder servo.

Conclusion

This paper highlighted the development of a SailBot designed by students at the United States Naval Academy to meet a mission never attempted before by a USNA team—the goal of a sail-powered ASV Trans-Atlantic crossing. Additionally, the USNA SailBot team is focused on continual improvement of its existing fleet and the changes made to Boat #3 in the hopes of a faster, more capably autonomous Sailbot were discussed. As word of The International SailBot Regatta and the WRSC spreads among students and faculty at the world's universities, they will hopefully be inspired to join in competitions and add their own experiences and knowledge to the field of robotic sailing. The world waits for the latest breakthrough innovations to send sail-powered ASV's to the tip of the spear in long-range, unmanned research, surveillance, and reconnaissance.

Acknowledgments

Funding for the USNA SailBot team was provided by the Naval Sea Systems Command and Project Engineering Office – Ships, US Navy. Significant help on the project was provided by Professor Brad Bishop, Mr. Joe Bradsaw, the Technical Services Department, and the Sail Loft of the United States Naval Academy.

References

1. *SailBot Class Rules – as revised 2010*, 23 Dec. 2010, www.usna.edu/Users/naome/phmiller/SailBot/SAILBOT%20Class%20Rules%201Nov10.doc

2. Miller, P. "SailBot: The North American Autonomous Sailboat Competition," The Journal of Ocean Technology, Volume IV, Jan. 2009, pp. 1-5.

3. Miller, P., Brooks, O., Hamlet, M,, "Development of the USNA SailBots (ASV)", International Robotic Sailing Conference, Porto, Portugal, July 9, 2009

4. Miller, Paul H., “Student Research Projects for the New Navy 44 Sail Training Craft”, 16th Chesapeake Sailing Yacht Symposium, Annapolis, MD, March 21-22, 2003

5. D. Martin, R. Beck, “PCSail, A Velocity Prediction Program for a Home Computer,” in the *Proceedings of the 15th Chesapeake Sailing Yacht Symposium*, Annapolis, MD, USA, January 2001

6. Gibbons-Neff, Peter; Miller, Paul; “Route Planning for a Micro-Transat Voyage”, International Robotic Sailing Conference, Luebeck, Germany, 15-16 August 2011

7. Miller, P., Beal, B., Capron, C., Gawboy, R., Mallory, P., Ness, C., Petrosik, R., Pryne, C., Murphy, T., Spears, H., Hamlet, M., “Increasing Performance and Added Capabilities of USNA Sail-Powered Automonous Surface Vessels (ASV)”, International Robotic Sailing Conference, Kingston, Canada, June 7th, 2010.