An AC Comparator for Audio Frequency Waveforms

Svetlana Avramov and Ivan Zupunski

Abstract—**The "difference" detection between two periodic, arbitrary waveforms is described. The input signals have the same frequency (in the audio range) and are approximately in phase. The inputs are combined into a composed signal carrying information about the difference between their half period mean values. The required sensitivity is achieved by signal integration. The instrument can detect a relative amplitude difference of a few ppm. The ac comparator is microprocessor controlled and can be used to maintain a stable ratio between amplitudes, mean values, or some other characteristics of the two input signals.**

I. Introduction

A NUMBER of measuring methods are based on the comparison of two signals. For the comparison of dc signals, well known methods have existed for years, but for ac signals the solutions are not straightforward. Usually, the measuring uncertainties for ac signals are not as good as those for dc signals. For example, for the comparison of effective values, electrodynamic or electrostatic instruments are used. In addition, there are electronic devices that, with various degrees of success, transform ac signals into dc and then measure the amplitude, average, or effective values.

A device for detecting the "difference" of two periodic, but arbitrary ac waveforms of same frequency is described in this paper. The input signals are combined and then integrated so that the information about the difference between the averaged values of their half periods is contained in the result. In that sense the term input signal "difference" is used in the text.

Having the information about their "difference," one can control the ac sources to maintain a stable ratio of any parameter: amplitude, averaged value, or effective value, etc.

The main reason for designing this ac comparator is the comparison of two ac signals that carry information about the voltage and current in a calibration system for testing electric power/energy measuring instruments.

II. Theory of Operation

The analysis of the operating principles will be given for sinewave input signals, for the sake of simplicity.

If there are two input signals (Fig. 1.)

$$u_1(t) = U_1 \sin \omega t; \qquad u_2(t) = U_2 \sin \omega(t - t_1) \tag{1}$$

it is possible to combine them by switches to yield a composed signal $u(t)$ (Fig. 1) given by

$$u(t) = U_1 \sin \omega t \sum_{k=1}^{\infty} \left\{h(t - kT) - h\big(t - (k+1)T\big)\right\} + U_2 \sin \omega(t - t_1) \sum_{k=1}^{\infty} \left\{h\big(t - [2(k+1)T/2 + t_1]\big) - h\big(t - [(2k+1)T/2 + t_1]\big)\right\} \tag{2}$$

where T is the period, $h(t)$ is the step function [$h(t) = 1$ for $t > t_0$ and $h(t) = 0$ for $t < t_0$], and k is the number of full cycles of input signals present from the start of the measurement to the instant t.

When the composed signal $u(t)$ is integrated, the integrator output $u_c(t)$ (Fig. 1.) is given by

$$u_c(t) = -1/(\omega RC)\big(k(U_1 - U_2)(1 + \cos \omega t_1) + U_1\big(1 - \cos \omega(t - kT)\big)\big) \quad \text{for } kT < t < (2k+1)T/2 + t_1$$

and

$$u_c(t) = -1/(\omega RC)\big(k(U_1 - U_2)(1 + \cos \omega t_1) + U_1(1 + \cos \omega t_1) - U_2\big(1 + \cos \omega(t - t_1 kT)\big)\big) \quad \text{for } (2k+1)T/2 + t_1 < t < (k+1)T \tag{3}$$

where RC is time constant of the integrator.

It is evident that at the instants $t = kT$, $k = 0, 1, 2, \cdots$, the output of the integrator $u_c(t)$ is directly related to the difference in the half period average value of the input signals and their phase shift

$$u_c(kT) = -(1/2\pi RC)(U_1 - U_2)kT(1 + \cos \omega t_1) \tag{4}$$

and if it has a zero value, the input signals are "in balance."

The input signals (1) can be combined into the composed signal shown in Fig. 2. By using the same mathematical approach the integrator output $u_c(t)$ at instants $t = 2kT$ is given by

$$u_c(kT) = -(1/2\pi RC)(U_1 - U_2)kT. \tag{5}$$

Combining (4) and (5) the phase difference between input signals is expressed as

$$\cos \omega t_1 = u_{c(4)}/u_{c(5)} - 1. \tag{6}$$

In general, whenever there are two signals that have the same frequency and do not have a dc component, the composed signals showed on Fig. 1. and Fig. 2. can be generated. The integrator output maxima are directly related to the input signal "difference." This holds when the input signals are symmetric waveforms related to the $T/4$. The influence of quantities such as non-symmetry and dc component will be discussed later.

Since the signal carrying the information about the input "difference" is integrated over a given time interval, it is convenient to express the sensitivity of this instrument in terms of input signal "difference" detected, per unit time.

Manuscript received June 12, 1990.

The authors are with the Faculty of Technical Sciences, University of Novi Sad, 21000 Novi Sad, Yugoslavia.

IEEE Log Number 9042400.

0018-9456/91/0400-0373$01.00 © 1991 IEEE

Authorized licensed use limited to: US Naval Academy. Downloaded on January 30, 2009 at 14:59 from IEEE Xplore. Restrictions apply.

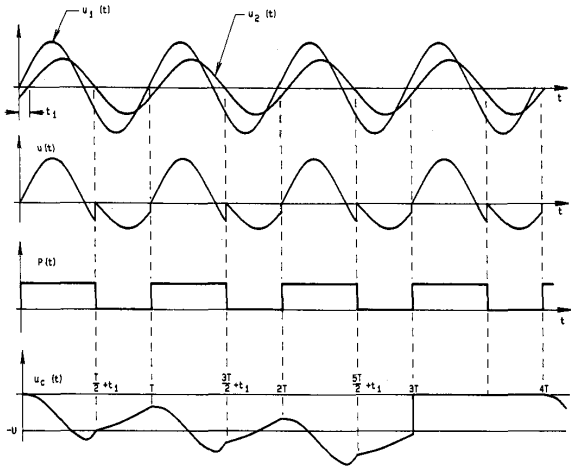

Fig. 1. Measuring method I: $u_1(t)$, $u_2(t)$—input signals; $u(t)$—composed signal; $u_c(t)$—signal at the output of the integrator; U—limit value set by comparator.

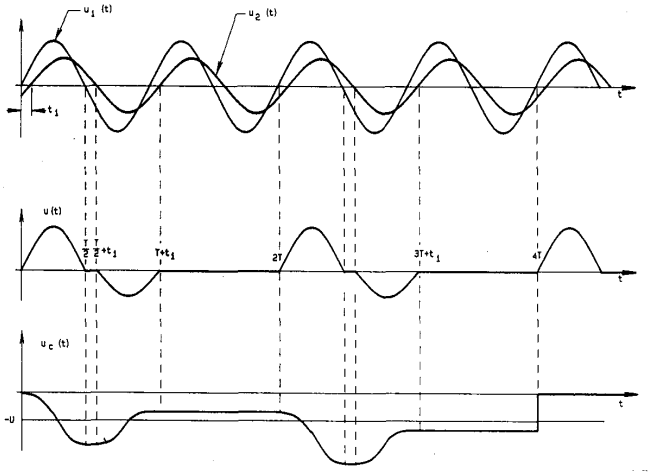

Fig. 2. Measuring method II.

III. Description of the Instrument

The ac comparator consists of the measuring module that compares the analog input signals, the digital module that interfaces the control logic, the IEEE 488 interface, and the internal microcomputer that controls the measuring procedure and the communication with the measuring system controller.

The simplified block diagram of the measuring part of the instrument is shown in Fig. 3.

The input signals $u_1(t)$ and $u_2(t)$ to be compared are selected by an analog switch S to obtain the composed signal $u(t)$. The switch S is controlled by the pulses from the pulse generator. The pulse generator consists of the zero-crossing detectors for both input signals and the control circuit. Controlling the pulses from the zero-crossing detectors, composed signals may be generated as shown in Fig. 1 and Fig. 2.

The composed signal $u(t)$ is applied to the integrator. The integrator output $u_c(t)$, besides having the ac component which describes charging and discharging the capacitor C (Fig. 1 and Fig. 2), has a dc component which is related to the "difference" of the input signal. At specially defined times, the integrator output is compared with limits ($\pm U$) set by the comparator. When the dc component exceeds one of these limits, the corresponding flip-flop sends a pulse to the up-down counter and resets the capacitor for the next measurement which starts at the beginning of the next period of the input $u_1(t)$ (Fig. 1).

The counter state is a measure of the "difference" between the input signals. The digital output from the counter is used for further data processing. This is an A/D conversion of the input signal "difference."

The difference between the two ac input signals can be obtained by the differential method. However, it is difficult to obtain high, stable and linear differential gain, rectification of the relatively small signal that carries the information about input difference, and transformation of the signal to a dc signal. The

Authorized licensed use limited to: US Naval Academy. Downloaded on January 30, 2009 at 14:59 from IEEE Xplore. Restrictions apply.

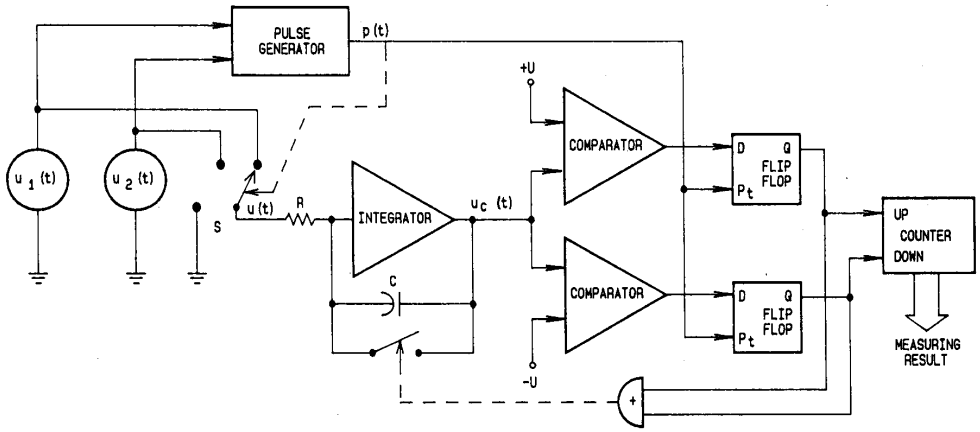

Fig. 3. The simplified block diagram of the measuring module of the ac comparator.

insensitivity of the differential method to phase differences gives the additional advantage to the proposed ac comparator.

IV. The Comparison/Measurement Procedure

When the ac comparator is powered on, the autocalibration procedure is started with the same signal at both input channels. The recorded state of the counter during the autocalibration is a measure of the systematic errors. The autocalibration procedure can be repeated before each comparison/measurement.

The counter state N_{c1}, for sine wave input signals and a measuring time T_m, according to (4), is approximately given by

$$N_{c1} = -(1/2\pi RC)(U_1 - U_2)T_m/|U|(1 + \cos \omega t_1) = S(U_1 - U_2) \quad (7)$$

or, for arbitrary waveforms, the corresponding relationship is

$$N_c = S_1(A_1 - A_2) \quad (8)$$

where $|U|$ is limit value set by comparator, A_1, A_2 are the input signals half-period averaged values and S, S_1 are corresponding instrument sensitivities. The precise knowledge of sensitivity S is not essential if the instrument is used in a balance operating mode like the null detector in the bridge circuits.

To reduce the effect of nonsymmetry and the dc component in input signals, a second measurement is performed. The inputs are interchanged and a new result N_{c2} is obtained.

The corrected measurement result N_{cc} is given by

$$N_{cc} = 1/2(N_{c1} - N_{c2}). \quad (9)$$

V. Error Analysis

The instrument is primarily designed to work with inputs that do not differ too much in phase, amplitude, and waveform. The analysis will be given for that operating mode.

The Error Due to Nonideal Zero-Crossing Detector: The measuring procedure is synchronized with the pulses $p(t)$ generated in the pulse generator (Fig. 3). There are a number of influences that cause extracted pulses $p(t)$ to deviate from ideal. It could be shown that the voltage offset, slew rate, and hysteresis of the zero-crossing detector influence the measuring result in the same manner as the time delay. The estimated systematic error is

$$\Gamma = \cos \omega t_d \text{ (where } t_d \text{ is time delay)}. \quad (10)$$

The noise influence can be neglected due to integration in measuring procedure.

The Error Due to Nonideal Switching: The carefully designed modules with analog CMOS switches are used to make the composed signal. When input signals are in phase at the moment of switching, they are equal and have zero value. When there is a small phase shift between the input signals at the moment of switching they have approximately the same value, so the disturbance due to switching is not large.

The instrument is designed for the frequency range of a few kHz and according to that the delay caused by IC-switches is negligible.

The influence due to nonideal switching is estimated by applying the same (ac and dc) signal to both input terminals during the autocalibration procedure.

The Time Interval Measuring Error: The decisions about the dc component which carries the relevant information about the input "difference" are made only at discrete times. The relative error in time interval measurement T_m is

$$\Gamma_n = 1/(n - 1) \quad (11)$$

where n is the number of cycles of inputs integrated when the "difference" is detected.

If the instrument is operating as a null detector, this error is irrelevant.

Error Due to Parameter Drift of Measurement Circuit: The measurement circuit is made with operational amplifiers whose characteristics are changing due to various influences during time. These parameter drifts have the largest influence on the result of the comparison/measurement because they are integrated with the relevant signal. The component drift influence is evaluated by grounding the input terminals. The recorded counter state is measure of this influence.

Significant reduction of all the errors mentioned above could be achieved not only by careful design of particular modules, but also by frequently applying the properly designed autocal-

Authorized licensed use limited to: US Naval Academy. Downloaded on January 30, 2009 at 14:59 from IEEE Xplore. Restrictions apply.

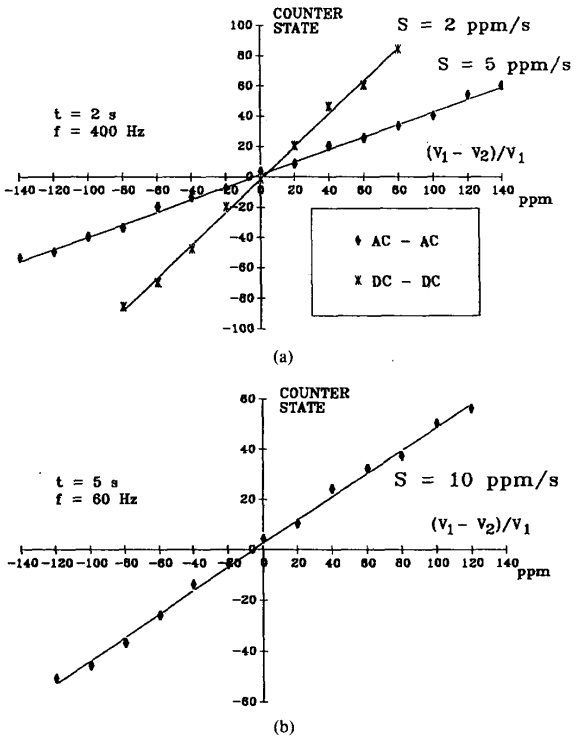

Fig. 4. The amplitude sensitivity characteristics.

ibration procedure. In that case the problem of long-term stability is reduced to the problem of short-term stability.

VI. Experimental Results

The ac comparator is primarily designed to maintain a given (stable) ratio between two signals that are approximately in-phase, and the instrument was tested mainly in that operating mode.

A number of experiments were carried out to evaluate the instrument performance and to optimize the relevant parameters (the values for comparators limit U, the time constant of integrator, etc.).

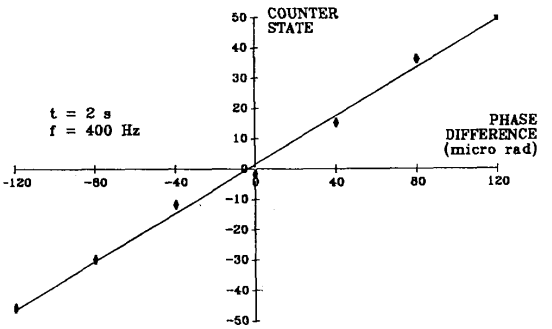

Fig. 5. The phase sensitivity characteristic.

The results showed that the ac comparator sensitivity is about 5–10 ppm/s.

The amplitude sensitivity characteristics for dc and ac (400-Hz sine waveform) signals are given in Fig. 4(a).

Fig. 4(b) shows the amplitude sensitivity characteristic for 60-Hz sinewave input signals.

The phase sensitivity characteristic for 400-Hz signals is shown in Fig. 5.

VII. Conclusion

A digital instrument for difference detection between two periodic, arbitrary (waveforms) signals of the same frequency (in the audio range) is described. As a special case, one or both inputs can be a dc signal, which means it is possible to compare ac and dc signals. The instrument can detect amplitude differences of a few ppm. The instrument's accuracy is assured by frequently executing the autocalibration procedure. By introducing "intelligence" into the switching control procedures the effects due to component drift can be reduced, and furthermore, other quantities, such as phase can be measured. The prime purpose of the instrument is to maintain a given (stable) ratio between the amplitudes or mean values of the inputs.

References

[1] B. M. Oliver and J. M. Cage, Eds., *Electronic Measurement and Instrumentation.* New York: McGraw-Hill, 1971.

[2] S. Avramov and I. Zupunski, "Comparison of two arbitrary waveforms," in *Proc. Conf. JUREMA 33*, Zagreb, Yugoslavia, 1988. (in Serbo-Croatian).

Authorized licensed use limited to: US Naval Academy. Downloaded on January 30, 2009 at 14:59 from IEEE Xplore. Restrictions apply.