Hornet 4

SAILING MONITOR

BROOKES & GATEHOUSE LTD

Owner's Handbook for Hornet 4

QUICK REFERENCE INDEX

Subject	*Paragraph*	*Page*
Switching on and off	2.1	4
Log	2.3	4
Boat speed	2.4	4
Wind angle	2.5	5
Wind speed	2.6	5
Timer	2.7	5
Reset log	2.8	6
Battery voltage	2.9	7
Alarms	2.10	7
Display illumination	2.11	8
Calibration	3	9
Fault-finding	4.3	16

BROOKES & GATEHOUSE LTD
Bath Road, Lymington, Hampshire, England.
Telephone (0590) 75200. Telex: 477724
BROOKES & GATEHOUSE INC
154 East Boston Post Road, Mamaroneck, N.Y., 10543, U.S.A.
Telephone: 914, 698.9330. Telex: 646627
WEST COAST OFFICE:
13377 Beach Avenue, Marina del Rey,
California 90291
Telephone: 213 823 4956. Telex: 652473

© Brookes & Gatehouse Ltd 1983

Printed in England by Printwise, Lymington

221-HB-0028

CONTENTS

		Page
1 DESCRIPTION		1
1.1	INTRODUCTION	1
1.2	THE HORNET 4 SYSTEM	1
1.2.1	Facilities	1
1.2.2	Displays	1
1.2.3	Sailing Monitor	1
1.3	SPECIFICATION	2
1.3.1	Physical	2
1.3.2	Electrical	3
1.3.3	Ranges, Accuracy, Resolution and Damping	3
1.3.4	Satnav pulses	3
2 OPERATION		4
2.1	SWITCHING ON AND OFF	4
2.2	THE KEYBOARD	4
2.3	LOG	4
2.4	BOAT SPEED	4
2.4.1	Damping	4
2.5	WIND ANGLE	5
2.5.1	Analogue displays	5
2.5.2	Sailing Monitor	5
2.6	WIND SPEED	5
2.7	TIMER	5
2.7.1	Count-down from 15, 10 or 5 minutes	6
2.7.2	Count-down from up to 9 hours 59 minutes	6
2.8	RESET LOG	6
2.8.1	Displaying	6
2.8.2	Starting	6
2.8.3	Count-down from a preset value	6
2.9	BATTERY VOLTAGE	7
2.10	ALARMS	7
2.10.1	Setting an alarm	7
2.10.2	Switching the alarms on and off	8
2.10.3	Silencing an alarm	8
2.11	DISPLAY ILLUMINATION	8

3 CALIBRATION		9
3.1	BOAT SPEED AND LOG	9
3.1.1	Underwater unit alignment (impeller type)	9
3.1.2	Underwater unit alignment (paddlewheel type)	10
3.1.3	Sonic Speed	10
3.1.4	Calculating the correction factor	10
3.1.5	Adjusting the calibration	12
3.2	WIND ANGLE	12
3.2.1	Masthead unit alignment	12
3.2.2	Sailing trial	13
3.2.3	Entering the masthead unit alignment correction	13
3.2.4	Wind angle for shore stations	13
3.3	ANALOGUE SPEED INDICATORS	13
4 MAINTENANCE		15
4.1	ROUTINE MAINTENANCE	15
4.1.1	Underwater unit housings	15
4.1.2	Underwater unit (impeller type)	15
4.1.3	Underwater unit (paddlewheel type)	15
4.1.4	Desiccators	15
4.2	WINTER STORAGE/LAYING UP	15
4.2.1	Masthead unit	15
4.2.2	Underwater unit	16
4.3	FAULT FINDING	16
4.3.1	Masthead unit and cable	16
4.3.2	Analogue meter	16
4.3.3	Digital repeater	17
4.3.4	Underwater unit	17
4.3.5	Power supply	17
5 PARTS LIST		18
6 CONNECTIONS DIAGRAM		

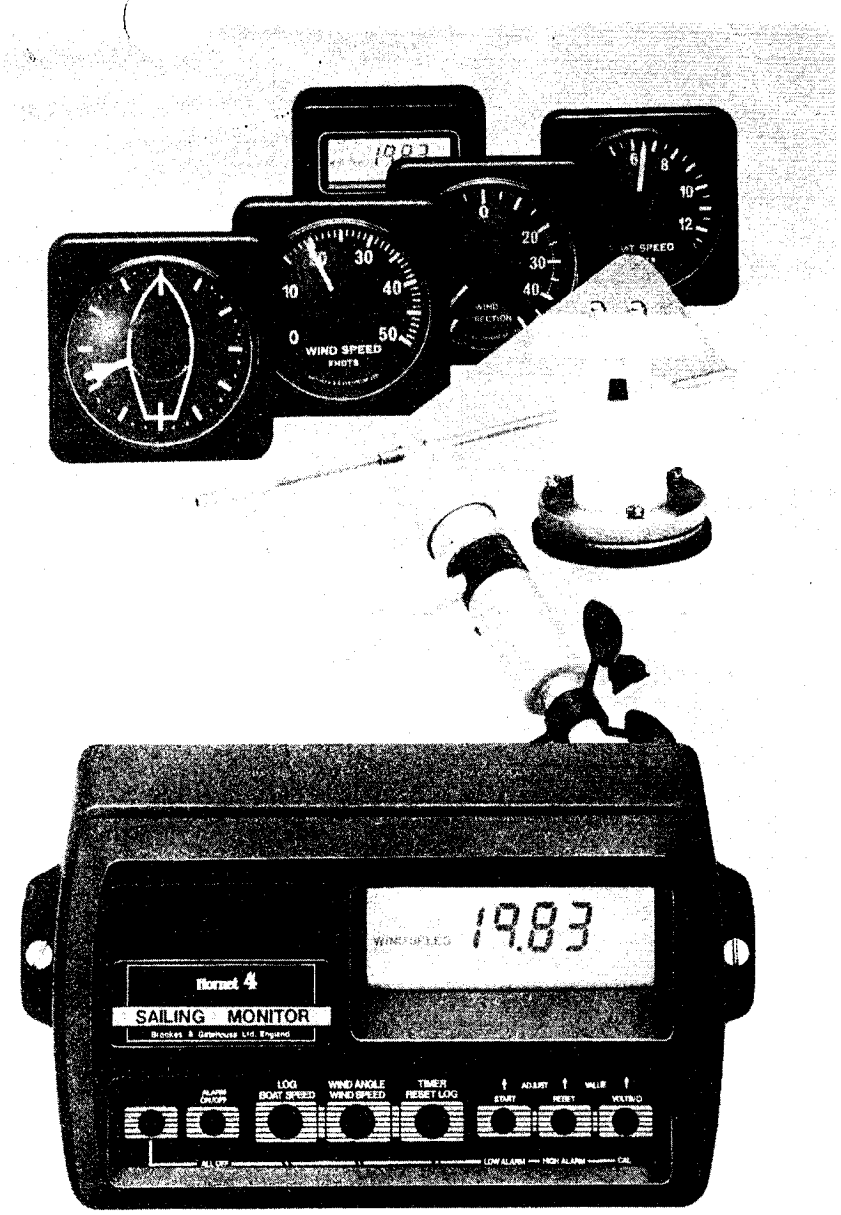

HORNET 4

1 DESCRIPTION

1.1 INTRODUCTION

The Hornet 4 is the latest development in a series of Hornet instruments designed to provide essential sailing information from one compact control unit. The Hornet 4, using the latest technology is not only able to provide more information than in previous instruments, but also display this data at the control unit. For this reason the unit is now termed the Sailing Monitor. The basic information is displayed on remote analogue indicators without need for switching at the Sailing Monitor. Additionally, this information plus extra data can be displayed on a liquid crystal display at the Sailing Monitor, under the control of a simple keyboard. The choice of how to use the Hornet 4 is in the hands of the owner. The system can be of particular use when short handed, as the alarms can be set to warn the sailor of changing conditions.

The Sailing Monitor is designed to match in appearance other B&G instruments such as the Hercules Depthsounder, Homer 5 radio and Horizon satellite navigator, and is housed in a tough case moulded in a material chosen after much research and investigation. Precision moulding and thorough engineering design combine to ensure that the electronic circuitry is well protected from sea air and moisture. Desiccators are provided in the remote indicators as well as the Sailing Monitor to ensure that the internal atmosphere is completely dry, aiding reliability and preventing condensation.

1.2 THE HORNET 4 SYSTEM

1.2.1 Facilities

The Hornet 4 system provides the following information:

- Boat speed
- Log
- Wind speed
- Wind direction
- Reset log
- Timer
- Battery voltage
- Alarms

1.2.2 Displays

The cockpit displays are B&G's familiar square-bezel 4-inch indicators with built-in scale illumination. Four indicators are available as follows:

Boat speed	12 knots
Wind speed	50 knots
Wind direction	360°

Magnified wind direction (optional extra)

Digital repeaters will be available as additions or alternatives to the above.

1.2.3 Sailing monitor

This is the heart of the Hornet system. It processes the incoming signals, and provides outputs to the repeaters as well as its own digital display. A keyboard is provided to control the display and for setting the alarms. The information displayed at the repeaters is independent of that selected to appear at the Sailing Monitor.

The inform .vailable at the Sailing Monitor is as follows:

Boat speed	0-99.99 knots high alarm low alarm
Log	0.0-9999.9 nautical miles
Reset log	0-999.99 nautical miles. A countdown from up to 99.9 nautical miles is selectable. At the end of the countdown, at zero, an alarm sounds and the log counts upwards from zero.
Wind speed	0-99.9 knots 0-99.9 metres/second high alarm low alarm
Wind direction	0°-359° 0°-180° port and starboard high alarm low alarm
Timer	Count-down from 5, 10 or 15 minutes, or from 9 hours 59 minutes, or any intermediate value. After count-down is complete an alarm sounds and the timer counts elapsed time.
Battery voltage	dc volts high alarm low alarm

Display illumination control

1.3 SPECIFICATION

1.3.1 Physical

Construction:

Injection-moulded glass-filled thermoplastic cases. All display units are fully sealed and fitted internally with desiccators, which can be re-activated (see para 4.1.4).

Size and weight:

Sailing Monitor:	230.5mm (9in) x 126.5 (5in) x 59.5mm (2¼in) weight: 1.0kg (2.2lb)
Analogue repeater:	Bezel width: 108mm (4¼in) Barrel diameter: 63mm (2½in) Depth: 57mm (2¼in) Weight: 350gm (0.7lb)
Digital repeater:	110mm (4¼in) x 110mm (4¼in) x 42mm (1½in) Weight: 500gm (1lb)
Masthead unit:	Length: (centre of base to centre of transmitter unit) 560mm (22in) Weight: 650gm (1.5lb)
Underwater unit:	Height from outer surface of hull: Operating: 160mm (6.25in) Retracting: 200mm (7.75in) Withdrawal: 290mm (11.375in)

Standard cable lengths:

Mast cable:	18m
Underwater unit:	13m
Sailing monitor to junction box:	9m
Sailing monitor to indicators:	10m
Power cable:	3m

Operating conditions:

Safe distance of indicators from compass:	200mm (8in)
Temperature:	operating −10°C to +60°C storage −25°C to +90°C
Humidity:	0 to 100%

1.3.2 Electrical

Data Retention:

The internal data is retained by use of a self-contained battery with a life of several years. An audible warning is given when the battery is reaching the end of its life.

Power requirements:

Operating voltage range:	9V to 30V dc (12V or 24V nominal)
Current drain:	(with three analogue indicators) 200mA digital repeater: 5mA analogue repeater: 33mA

The Sailing Monitor supplies and controls the display illumination for the indicators, both analogue and digital.

1.3.3 Ranges, Accuracy, Resolution and Damping

Function	*Range Analogue*	*Range Digital*	*Accuracy Analogue*	*Accuracy Digital*	*Resolution Digital*	*Calibration Range*
Boat speed	0-12.5kt	0.01-99kt	±2%fsd* ±0.25 kt¶	±1% ±0.1 kt¶	0.01kt	±40%
Log	-	0-9999nm	-	±1%	0.01nm	±40%
Windspeed	0-50kt	0-99kt	±2%fsd* ±1kt¶	±5% ±0.1kt¶	0.1kt	±40%
Wind direction	360°	0-359°	±3°¶	±2°¶	1°	0-359°
Wind direction (magnified)	±50° (bow or stern)		±1%¶		3:1 magnification	0-359°
Timer	− 9hr 59m to 99hr 59m		±0.5sec/day		1 second	

¶ After calibration, whichever is the greater

* Full scale deflection

1.3.4 Satnav pulses

Satnav interface: 200 pulses per nautical mile. (See installation sheet ref. IS4).

2 OPERATION

2.1 SWITCHING ON AND OFF

The Hornet 4 is switched on and off at the ship's main switchboard. Boat speed, wind speed and direction are immediately displayed on the repeaters. The Sailing Monitor displays the log reading at switch on.

2.2 THE KEYBOARD

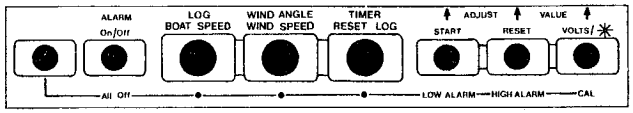

The keyboard is operated by pressing one key at a time. Pressing a second key while the first is still pressed has no effect. The left hand key is known as the 'shift' key and is used in sequence with one of the others to obtain access to the functions printed below the keys on the keyboard.

2.3 LOG

The accumulating log is displayed when the Sailing Monitor is first switched on. At other times it may be recalled to the digital display by pressing the third button from the left, LOG/BOAT SPEED. Distance sailed is recorded and displayed up to 9999 nautical miles. The accumulated total is retained in the Sailing Monitor memory when the power is switched off by means of a built-in support battery. The RESET LOG is described in para. 2.8.

An alternative display format can be selected by pressing the shift key and then re-selecting LOG. The display will now show hundreds of miles with one decimal place up to a maximum of 999.9 miles. This format is retained until the above procedure is repeated.

2.4 BOAT SPEED

Boat speed is displayed continuously on the appropriate analogue indicator irrespective of switch operation at the Sailing Monitor.

To display boat speed at the Sailing Monitor press the third button from the left, LOG/BOAT SPEED. Successive operation of this control alternates the display between log and boat speed. Boat speed at the appropriate repeater is not affected by switch operation at the Sailing Monitor.

Boat speed is displayed at the Sailing Monitor in knots with two decimal places. The alternative format with tenths of a knot only is selected as follows. Display BOAT SPEED, press the shift key, and then press LOG/BOAT SPEED. This format remains until such time as the above procedure is repeated, when it will revert to the original format.

Boat speed alarm setting and operation is described in paragraph 2.10.

2.4.1 Damping

The damping (speed of response) of the boat speed indication is adjustable to suit differing sea conditions. In rough weather, for example, much heavier damping will be required than for sail trimming in calm conditions. To adjust the damping, first select BOAT SPEED, then press the shift key followed by the right hand key ▲ VOLTS/✳ CAL

Subsequent operation of this key steps the indicated damping constant on the display through the sequence 2,4,8,16,32,64 seconds. The longer time constants represent heavier damping (slower response). When the required damping is displayed, press LOG/BOAT SPEED and the speed displayed will now be subject to the new damping. The change of damping only affects the digital reading. The analogue cockpit repeaters have fixed mechanical damping.

2.5 WIND ANGLE

2.5.1 Analogue displays

Wind angle is displayed on 360° and magnified direction analogue indicators. The magnified direction indicator shows the relative wind angle either side of the bow or stern. The 360° indicator shows the apparent wind angle, with respect to a hull shape on the indicator, through a continuous 360°.

2.5.2 Sailing Monitor

To select WIND ANGLE at the Sailing Monitor press WIND ANGLE/WIND SPEED. Wind angle is displayed in degrees from 0° to 180° with a bar marker to indicate PORT or STARBOARD. (Marker to the **left** of the display indicates PORT).

An alternative format of 0°-359° can be selected if required. To do this, first display WIND ANGLE, then press the shift key and finally re-select WIND ANGLE. Keep this key pressed until the display goes blank (approx. ten seconds) to set this in the memory. This format will apply until the above procedure is repeated to re-select the original format.

Fixed damping is applied having a time constant of approximately four seconds.

2.6 WIND SPEED

The apparent wind speed is displayed on a 0-50 knots analogue indicator as well as being selectable for display at the Sailing Monitor. To select WIND SPEED at the Sailing Monitor, first select WIND ANGLE by pressing WIND ANGLE/WIND SPEED and then press it again. The WIND SPEED in knots is given in tens, units and one decimal place. An alternative format is available, without tenths of a knot. This is selected by displaying WIND SPEED at the Sailing Monitor, pressing the shift key and then re-selecting WIND SPEED. (Re-selection is achieved under these circumstances by a single press on WIND ANGLE/WIND SPEED). The new format is retained in memory. If the above procedure is repeated, the display returns to the original format. Setting and operating of alarms is described in paragraph 2.10.

2.6.1 Damping

Fixed light damping of about 1.5 seconds time-constant is provided.

2.7 TIMER

To display the TIMER press the key marked TIMER/RESET LOG. (Successive operations switch the display alternately between TIMER and RESET LOG). The TIMER display is in minutes and seconds up to 59 minutes and 59 seconds separated by a colon (:). Every ten seconds the number of hours is displayed up to a maximum of 99. An alternative format is available for selection. This shows hours and minutes

separated by ...hing colon (on for one second, off for one second) up to a maximum of 99 hours and 59 minutes. This is selected by pressing the shift key followed by TIMER/RESET LOG. When on a racing count-down of five, ten or 15 minutes, the display reverts to the minutes and seconds format even if the alternative format has been selected.

With the TIMER displayed, it may now be stopped and set to count down from five, ten or 15 minutes, or from any value up to 9 hours 59 minutes. After counting down to zero an alarm sounds and the timer then continues counting upwards to indicate elapsed time. Alternatively, it can be set to count up from zero.

2.7.1 Count-down from 15, 10 or 5 minutes (racing start)

With TIMER being displayed, press the ▲RESET key (second from right), observing the display. Press the key as many times as is necessary to bring the required figure to the display. (The display moves through the sequence 5, 10, 15, 0, 5, etc.). Press ▲START to start the count-down. Note: on digital repeaters the wind speed value is overwritten with the 5, 10 or 15 minutes count-down display of time until zero is reached, when it reverts to wind speed.

2.7.2 Counting down from up to 9 hours, 59 minutes

Display TIMER and select hours/minutes format as described in paragraph 2.7. Press the shift key and then ▲VOLTS/★/CAL. Press the three right hand keys as necessary to set the required time, up to 9 hours 59 minutes. Press TIMER/RESET LOG and then ▲RESET (second key from the right). With any main function being displayed (LOG, BOAT SPEED, WIND ANGLE, WIND SPEED, TIMER or RESET LOG), press ▲START (third from the right) to start the timer. The timing required can be set up in advance, the ▲START key being pressed at the critical moment, even though the monitor may currently be providing other information. The timer starts counting down to zero, and then counts upwards. A ten second alarm starts to sound at zero and a flashing colon (:) is displayed. Note: if timer and reset log have both been reset, they will both start simultaneously when ▲START is pressed.

2.8 RESET LOG

2.8.1 Displaying

Press the key marked TIMER/RESET LOG. Successive operations cause the display to alternate between TIMER and RESET LOG. The log is reset (taken to zero) by pressing ▲RESET (second key from the right) while displaying RESET LOG. The display goes to zero, and the log remains inactive until commanded to start.

2.8.2 Starting

This can be done at any time provided that any main function is being displayed i.e. WIND SPEED, WIND ANGLE, LOG, BOAT SPEED, TIMER, RESET LOG and the log has been reset as in 2.8.1 above. To start the RESET LOG press the key marked ▲START (third from the right).

The display shows hundreds of miles with one decimal place. An alternative format is selectable which shows tens of miles with hundredths of a mile up to 99.99 nautical miles. To select this, first display RESET LOG, then press the shift key. Press TIMER/RESET LOG again to bring back reset log to the display in the new format.

2.8.3 Count-down from a preset value

Select RESET LOG, press the shift key and then ▲VOLTS/★/CAL. Use the three right hand keys to set the required value (up to 99.9). Press TIMER/RESET LOG to return RESET LOG to the display. Press ▲RESET (second from the right). The display now shows the new count-down value with a '–' sign. To start the count-down, display one of the main functions (LOG, BOAT SPEED, WIND ANGLE, TIMER or RESET LOG). Press ▲START to start the count-down. During count-down the display is restricted to the format showing tenths of a mile. For preset values of less than 9.9, the display shows hundredths of a mile. A continuous audible alarm sounds for ten seconds when the count reaches zero, and 'RESET LOG' flashes in the display. The log then counts upwards to 999.9 and continues from 000.0 without sounding the zero alarm.

2.9 BATTERY VOLTAGE

This is selected by operating the right hand key, and gives the voltage of the ship's dc supply to two decimal places. This key is also used to control the display illumination, see paragraph 2.11.

Operation of high and low alarms is described in paragraph 2.10.

2.10 ALARMS

There are eight adjustable alarms:

boat speed	–	high alarm
boat speed	–	low alarm
wind angle	–	high alarm
wind angle	–	low alarm
wind speed	–	high alarm
wind speed	–	low alarm
supply voltage	–	high alarm
supply voltage	–	low alarm

In addition there are four non-adjustable alarms:

timer count-down zero (see paragraph 2.7)
reset log count-down zero (see paragraph 2.8)
low supply voltage (8.5V or less)
low internal battery voltage

2.10.1 Setting an alarm

To set an alarm, first display the appropriate function (BOAT SPEED, WIND ANGLE, WIND SPEED, BATTERY VOLTAGE) at the Sailing Monitor. For high alarm, press the shift key followed by ▲RESET/HIGH ALARM. The existing high alarm is now displayed. Operate the three right hand keys as required to set the new value. The display may show OFF as this may have been the last action on the alarm. Press ALARM On/Off/All Off to display the alarm value and then set the new value. Press the key relating to the function for which the alarm level is being set. This enters the new alarm setting.

Note: when displaying an alarm setting, the alarm is inhibited from working.

2.10.2 S[illegible]ıg the alarms on and off

When the equipment is started up by switching on at the distribution board, all the alarm settings including ON/OFF are as they were before switching off. To disable all the alarms operate the shift key followed by ALARM On/Off / All Off . Each alarm may be switched on or off individually, when displaying the alarm setting, by operating ALARM On/Off / All Off .

2.10.3 Silencing an alarm

When an alarm setting is exceeded an audible alarm is given which normally continues until corrective action brings the value back within the required limits. At the same time a visual indication is given at the Sailing Monitor display by the function description flashing on and off. Operation of ALARM On/Off / All Off silences an audible alarm during an excursion into the alarm zone, but the visual alarm indication remains until conditions return to normal. A subsequent excursion into an alarm zone results in both visual and audible alarms operating, and to silence the alarm ALARM On/Off / All Off must be operated again.

2.11 DISPLAY ILLUMINATION

The dimmer in the Sailing Monitor controls the lighting in both the digital display and the repeaters. Operating the right hand key VOLTS/★ / CAL initially causes the battery voltage to be displayed (see paragraph 2.9). Successive operations of this key make the display show in sequence OFF, 03, 02, 01, battery voltage, OFF etc. The legends OFF, 03, 02, and 01 refer to the level of back lighting or scale illumination at the Sailing Monitor and repeaters. When the required level has been selected return the display to any other function, and the selected illumination remains until next changed.

N.B. Your instrument will draw more current with lighting on, so make certain to switch off when adequate daylight is available.

3 CALIBRATION

3.1 BOAT SPEED AND LOG

3.1.1 Underwater unit alignment (impeller type)

With the valveless housing slacken off the three locking screws (1) fully and then slacken the ring-nut (2) if necessary so that the housing is free to rotate. With the boat making constant speed under power with the impeller unit down, turn the handle slowly through a small angle on either side of the fore-and-aft line until a maximum reading of speed is obtained on the digital or analogue display. (The flow lines beneath the hull are not necessarily parallel with the boat's fore-and-aft line). Then re-tighten the ring-nut by hand and screw down screws (1) fully. ensuring that their heads 'bottom' on to the shakeproof washers on the ring-nut (2). Subsequent re-alignment after removal of the underwater unit for cleaning is obtained automatically when the unit is lowered fully into its operating position.

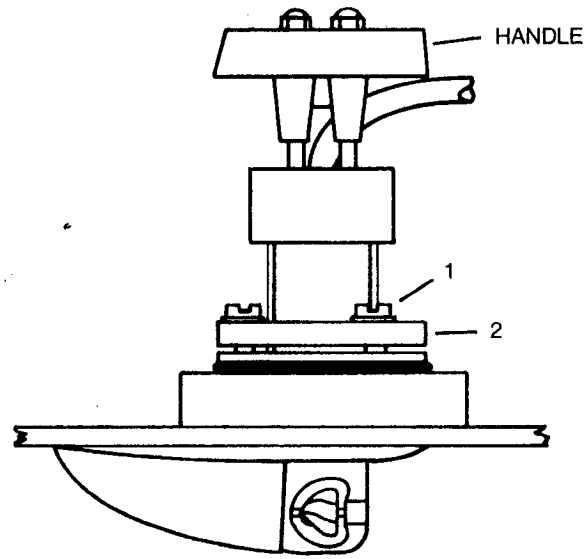

VALVELESS HOUSING

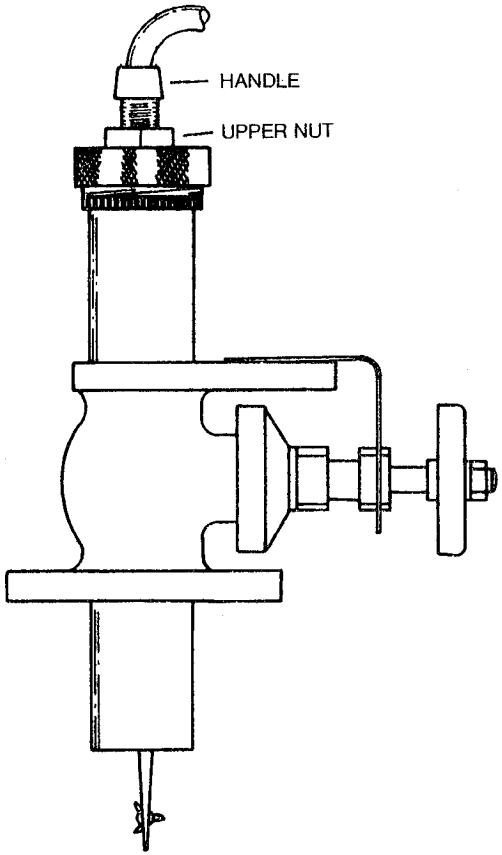

SHUT-OFF VALVE HOUSING

With the shut-off valve housing the upper nut should be slackened whilst the handle is turned to obtain maximum speed indication. The nut should then be re-tightened whilst holding the handle to prevent rotation.

3.1.2 Paddlewheel Type

It is only necessary to ensure that the moulded arrow on the top of the unit is pointing forward.

3.1.3 Sonic Speed

Ensure that the unit is operating correctly as described in the Owner's Handbook.

3.1.4 Calculating the correction factor

A series of runs over a measured distance is required. Three methods are described and a choice can be made depending on the prevailing conditions and accuracy required. In each case a correction factor k is calculated. This is the amount by which the indicated reading has to be multiplied to give the correct reading: i.e. if k = 1.03 the log is under-reading by 3%.

Method A is the simplest as no timing is involved, but the vessel must maintain a constant speed for both runs, and it is assumed that the current is constant.

Carry out a run in both directions and note the distance indicate[illegible] ie log at the beginning and end of each run to give the indicated distance run in each case: D1 and D2.

If the measured distance = M

$$\text{correction factor } k = \frac{M}{2}\left(\frac{1}{D_1} + \frac{1}{D_2}\right)$$

Method B is carried out as above but in addition the time taken for each run t1 and t2 is recorded. In this case the speed need not remain constant and calibration can be carried out under conditions when the speed could vary, e.g. whilst under sail or when engine r.p.m. are maintained but the boat is affected by windage.

$$\text{In this case correction factor } k = \frac{M\left(\frac{1}{t_1} + \frac{1}{t_2}\right)}{\frac{D_1}{t_1} + \frac{D_2}{t_2}}$$

Method C is the most accurate method requiring three runs over the measured distance. Again there is no necessity to maintain constant speed and the calibration can be carried out, if required, under sail. Current is assumed to be increasing or decreasing at a steady rate. Record times and indicated distances as before.

$$\text{correction factor } k = \frac{M\left(\frac{1}{t_1} + \frac{2}{t_2} + \frac{1}{t_3}\right)}{\frac{D_1}{t_1} + \frac{2D_2}{t_2} + \frac{D_3}{t_3}}$$

Note: for the above calculations M is in nautical miles and t is in decimal hours.

TABLE OF DECIMAL HOURS

MINUTES \ SECONDS	0	5	10	15	20	25	30	35	40	45	50	55
0		.001	.003	.004	.005	.007	.008	.010	.011	.012	.014	.015
1	.017	.018	.019	.020	.022	.024	.025	.026	.028	.029	.030	.032
2	.033	.034	.036	.037	.038	.040	.041	.043	.044	.046	.047	.049
3	.050	.051	.053	.054	.055	.057	.058	.060	.061	.062	.064	.065
4	.067	.068	.070	.071	.072	.074	.075	.076	.077	.079	.080	.082
5	.083	.085	.086	.087	.089	.090	.092	.093	.094	.096	.097	.098
6	.100	.101	.103	.104	.105	.107	.108	.110	.111	.112	.114	.115
7	.117	.118	.119	.121	.122	.124	.125	.126	.128	.129	.130	.132
8	.133	.135	.136	.137	.139	.140	.142	.143	.144	.146	.147	.149
9	.150	.151	.153	.154	.155	.157	.158	.160	.161	.162	.164	.165
10	.167	.168	.169	.171	.172	.174	.175	.176	.178	.180	.181	.182
11	.183	.185	.186	.187	.189	.190	.192	.193	.194	.196	.197	.199
12	.200	.201	.203	.204	.205	.207	.208	.210	.211	.212	.214	.215
13	.217	.218	.219	.221	.222	.224	.225	.226	.228	.229	.230	.232
14	.233	.235	.236	.237	.239	.240	.242	.243	.244	.246	.248	.249
15	.250	.251	.253	.254	.255	.257	.258	.260	.261	.262	.264	.265
16	.267	.268	.269	.271	.272	.274	.275	.276	.278	.279	.280	.282
17	.283	.285	.286	.288	.289	.290	.292	.293	.294	.296	.297	.299
18	.300	.301	.303	.304	.305	.307	.308	.310	.311	.312	.314	.315
19	.317	.318	.319	.321	.322	.324	.325	.326	.328	.329	.330	.332
20	.333	.335	.336	.337	.339	.340	.342	.343	.344	.346	.347	.349

3.1.5 A ng the calibration

Display LOG, and operate the shift key followed by the right hand key VOLTS/CAL.

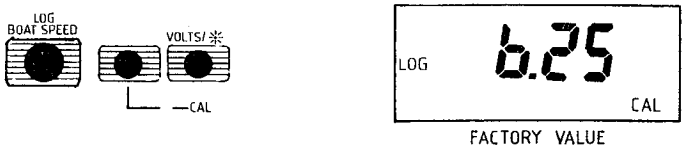

If the Sailing Monitor is new from the factory, the value 6.25 will be displayed (Hertz per knot generated by the impeller).
Divide this reading by the correction factor obtained from the test runs. The result is the new figure to be entered. Use the three ADJUST keys to enter the new value.

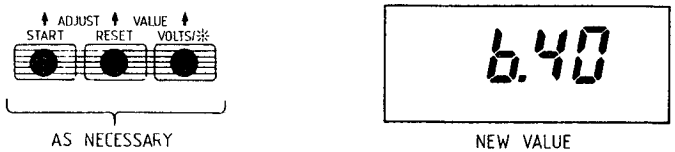

Example:

(1) k = 1.11 (from calibration run) i.e. under reading
(2) 6.25 divided by 1.11 = 5.63
(3) Enter using the three right-hand keys.

When the correction has been entered, operate LOG/BOAT SPEED and keep it pressed until the display goes blank (approximately ten seconds) to set this new value in the memory.

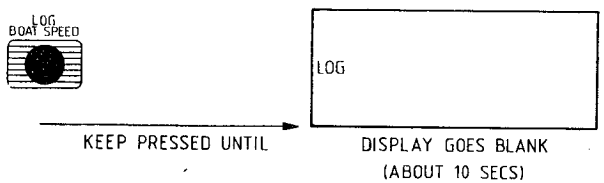

Note: if the unit is not new from the factory the existing calibration may not be 6.25. Whatever value is displayed must be used in calculating the new calibration value as this is the value that would have been in use during the calibration run.

3.2 WIND ANGLE

3.2.1 Masthead alignment

The masthead unit can be mounted with the spar pointing in any convenient direction so that it is free from obstruction. The Hornet 4 is designed to give wind angle with respect to the fore-and-aft line of the boat. Following installation of the masthead unit, it may be necessary to compensate for the angle of the spar off the centre line. If the spar is displaced from the fore-and-aft line by a substantial amount, an estimate of the angle should be made initially. This is the angle from the bow moving anticlockwise when imagined in plan view. The estimated angle should be entered (paragraph 3.2.3) before carrying out sailing trials as described in paragraph 3.2.2.

3.2.2 Sailing trial

Error can be resolved by sailing alternately close-hauled on each tack. If the reading on the starboard tack is greater than port, the difference should be halved and, being a positive error, must be added to the masthead unit alignment reading as described in paragraph 3.2.3. If the reading on the port tack is the greater, again the difference should be halved and the result subtracted from the masthead unit alignment reading (see paragraph 3.2.3). If the resultant angle is less than zero (negative), add 360° and use this figure e.g. for −1° use 359°.

3.2.3 Entering the masthead unit alignment

Display WIND ANGLE at the Sailing Monitor, operate the left hand (shift) key followed by VOLTS/CAL.

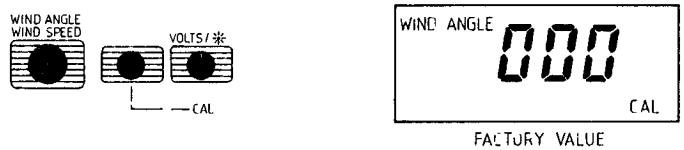

Operate the three right hand keys to set the digits to the required correction.

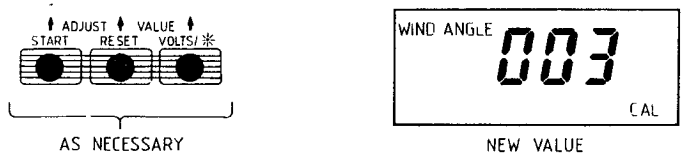

The setting is set in the computer memory by operating WIND ANGLE/WIND SPEED and keeping it pressed until the display goes blank (approximately ten seconds).

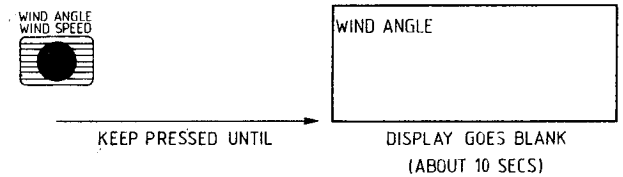

3.2.4 Wind angle for shore stations

An alternative format of 0 – 359° can be selected if required (for shore stations). To do this first display WIND ANGLE, then press the shift key and finally press WIND ANGLE again. Keep this key pressed until the display goes blank (approximately ten seconds) to set this in the memory. This format will apply until the above procedure is repeated to re-select the original format.

3.3 ANALOGUE SPEED INDICATOR

If necessary check that the correct meter calibration has been set in (12, 25, or 50 knots). To do this the second calibration page for the relevant function should be displayed.

The second calibration page is displayed as follows:

(1) Select main display (boat speed, or wind speed).
(2) Press the left hand (shift) key.
(3) Press VOLTS/CAL.

(4) P[illegible] a shift key.
(5) Press VOLTS/CAL.
The display now shows the full scale reading of the meter for which the unit is calibrated (012 for 12.5 knots, 050 for 50 knots, etc).

To change the setting operate one of the three right hand keys to step the display through the available values. When the required value appears on the display this must be 'burned in' by keeping the appropriate function key (BOAT SPEED or WIND SPEED) pressed until the display goes blank (approximately ten seconds).

4 MAINTENANCE

4.1 ROUTINE MAINTENANCE

4.1.1 Underwater unit housings

Keep the screw thread of the underwater unit housings well greased with silicone or water pump grease. Ensure that the outer surfaces of the housing are properly coated with anti-fouling paint.

4.1.2 Underwater unit (impeller type)

The impeller must be kept free from marine growth using a stiff brush. The impeller is removable from the fin for examination of bearings by slackening the aft-end screw. A bearing side-play of up to 0.015 inch (0.38mm) is allowable. If it exceeds this figure the screw and impeller should be changed. In the underwater unit for the valveless housing, the sealing ring must be kept liberally greased (water-pump or silicone type). In the shut-off valve type the rubber sealing gland, through which the operating shaft slides, should also be greased.

In the event of damage, a defective impeller fin is removed by releasing the two fixing screws. It is recommended that a spare impeller fin, complete with impeller and screws, is kept on board. When fitting the new impeller fin ensure that the peg on the plunger engages with the recess in the fin before tightening the screws.

4.1.3 Underwater unit (paddlewheel type)

The paddlewheel must be left free from marine growth using a stiff brush.

4.1.4 Desiccators

Should any display window show signs of moisture having penetrated the seals e.g. misting of the glass or condensation, the desiccator should be removed from the rear of the instrument and re-activated by placing in an oven or drying cupboard for approximately two hours at a temperature of 270°F (130°C). Plug the desiccator hole and keep the instrument dry during re-activation.

4.2 WINTER STORAGE/LAYING UP

4.2.1 Masthead unit

Storage of the masthead unit when the yacht is laid up afloat will increase the life of the transmitters. It should always be removed from masthead before the mast is unstepped. It should be stored in its packing box with the vane and cups removed. The exposed plug at the top of the mast must be protected with the plastic cap supplied with it. The body of the plug should be smeared with silicone grease such as MS4 (Midland Silicones Ltd). The transmitting units can be un-plugged after removing the locking screws. The contacts should be inspected for cleanliness and sprayed with a water inhibitor such as WD40. The O-ring should be greased with a silicone type grease and the units replaced.

The masthead unit must never be oiled. The bearings are of the sealed pre-lubricated type and any additional oil may cause chemical breakdown of the existing lubricant. Any scratch marks or corrosion on the masthead transmitters should be rubbed clean with a soft cloth and lightly smeared with silicone grease. This should not be necessary if care is taken when hoisting or lowering the masthead unit, to protect it from collision against the rigging.

If the mast is un-stepped, care must be taken to ensure that the cable is not cut through, but disconnected at the junction box below decks. The bare ends of the cable should be smeared with silicone grease.

4.2.2 Underwater unit

Remove underwater unit(s) from housing(s) and grease the sealing rings and threads. Place the sealing cap on the housing. Carry out the maintenance instructions given in paragraph 4.1.2.

4.3 FAULT FINDING

Function	Display incorrect at			Action
	Sailing Monitor	Analogue Meter	Digital Repeater	
WIND SPEED	★	★	★	See para 4.3.1
	★			Replace S/Monitor
		★		See para 4.3.2
			★	See para 4.3.3
WIND DIRECTION	★	★	★	See para 4.3.1
	★			Replace S/Monitor
		★		See para 4.3.2
			★	See para 4.3.3
BOAT SPEED	★	★	★	See para 4.3.4
	★			Replace S/Monitor
		★		See para 4.3.2
			★	See para 4.3.3
ALL	★	★	★	See para 4.3.5

IF THE ABOVE FUNCTIONS ARE OPERATING, ANY OTHER FAULT WILL BE LOCATED IN THE SAILING MONITOR. REPAIRS AND INVESTIGATIONS INSIDE THE SAILING MONITOR ARE TO BE UNDERTAKEN BY A B&G AUTHORISED REPAIR AGENT ONLY.

4.3.1. Mast unit and cable

Check that the cable connections are correct at the junction box and the sailing monitor (see the Connections Diagram at the end of this book for wiring details). The most practical test of the masthead unit and cable is by substitution, which for test purposes can be carried out without climbing the mast. If no fault is found with the masthead unit or cable the Sailing Monitor should be returned to workshop for investigation.

4.3.2 Analogue meter

Check that the connections to the meter are correct (see Connections Diagram for wiring details). The 'synchro' type meters used on the Hornet 4 are particularly sensitive to dirty or loose connections. If the wiring is correct check the meter itself by substituting a known good meter of the same type. **Under no circumstances use a standard 2mA meter.** If meter and wiring are correct, the Sailing Monitor should be returned to Workshop for investigation.

4.3.3 Digital repeater

If more than one digital repeater is fitted and all fail to give a correct display, check that the wiring is correct. If correct, the Sailing Monitor should be returned to workshop for investigation. See Connections Diagram for wiring details. If one display only is faulty try operating it in place of another unit to establish whether the fault is in the display or the wiring. Substitution of the suspect unit by a replacement item may sometimes be the only practical method of quickly deciding where the fault lies.

4.3.4 Underwater unit

(a) Impeller Type

(b) Paddlewheel type. Check that the paddlewheel is free to rotate. Check the resistance of the coil, which should be approximately 170 ohms.

(c) Sonic Speed. Call a B&G authorised repair agent.

Withdraw the underwater unit from its housing and screw the sealing cap onto the housing. Blow on the impeller to cause it to spin and observe the speed indication. Replace the impeller if it will not spin.

If no speed indication is obtained, check the underwater unit and cable for continuity, disconnecting the cable at the Sailing Monitor while carrying out the test. The resistance measured through the underwater unit and cable should be of the order of 7k to 10k ohms. Check that the connections at the Sailing Monitor are correct (see Connections Diagram). If no fault is found return the Sailing Monitor to workshop for investigation.

4.3.5 Power supply

The power supply voltage can be checked at the Sailing Monitor by pressing the right hand key. If no indication can be obtained check that the supply voltage is reaching the Sailing Monitor and that both voltage and polarity are correct. See Connections Diagram at the end of this book for details. If no fault is found, the Sailing Monitor should be returned to workshop for investigation.

5 PARTS LIST

Description	*Part No.*
Sailing Monitor	221-00-010
Hull housing, standard	117-00-046
Hull housing, shut-off valve	155-00-025
Insulating kit for shut-off valve housing	155-30-017
Weed deflector for shut-off valve housing	LG-30-011
Fin unit (kematal)	110-10-B21
Underwater unit, standard (with 10m cable)	117-00-120
Underwater unit for shut-off valve housing with 13m cable	117-00-124
Changeover switch	190-00-046
Kematal housing tube/weed deflector	117-10-B21
Impeller fin unit (stainless steel)	110-10-B17
Impeller, standard black	110-10-018
Paddlewheel housing, bronze with nut	202-00-035
Paddlewheel unit with cable	202-00-036
Paddlewheel blanking plug	202-00-037
Masthead unit, C type	137-00-035
Masthead spar, C type	137-10-047
Masthead bracket, C type	137-10-058
Wind direction potentiometer D7250	137-10-048
Wind speed transmitter D8102	137-00-045
Windvane and counterweight	178-10-028
Anemometer cups	WI-30-140
Junction box (mast cable)	WI-00-187
Cable, sailing monitor to indicators/satnav output, (20m)	135-0A-095
Cable, power, (3m)	135-0A-096
Cable, sailing monitor to junction box	135-0A-097
Cable, sailing monitor to changeover switch (4m)	135-0A-098
Mast cable with bracket (18m)	135-0A-019
Mast cable with bracket (24m)	135-0B-019
Mast cable with bracket (30m)	135-0C-019
Mast cable with bracket (36m)	135-0D-019
360° wind direction indicator, 4 inch	215-00-016
12.5 knots boat speed indicator, 4 inch	215-00-019
50 knot wind speed indicator, 4 inch	215-00-022
Magnified wind direction indicator, 4 inch	215-00-017
Digital repeater, boat speed	226-00-002
Digital repeater, wind speed/countdown	226-00-003
Digital repeater, wind angle	226-00-004

B&G

HORNET 4 INSTALLATION

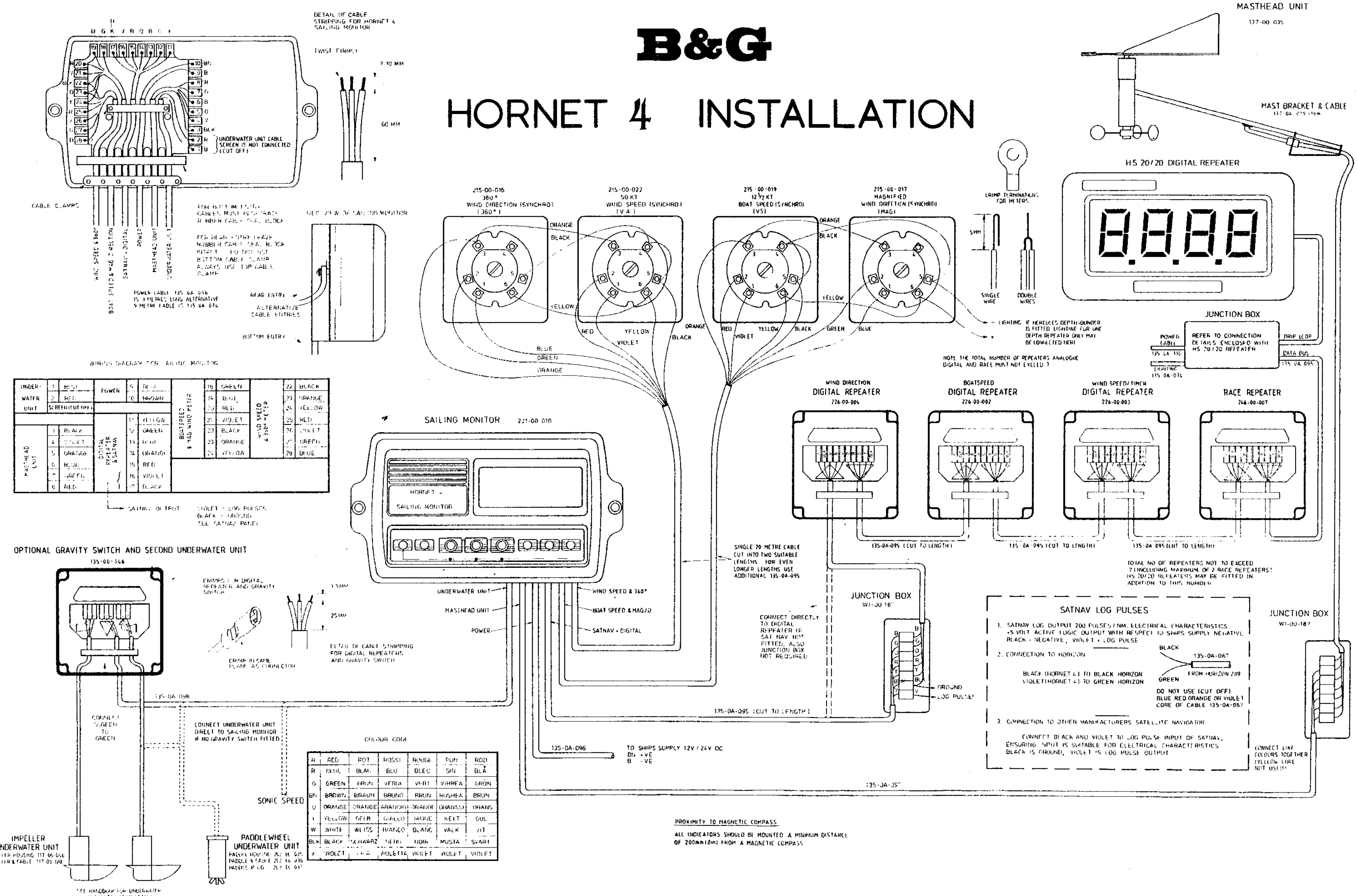

COLOUR CODE

R	RED	ROT	ROSSI	ROUGE	PUN	ROD
B	BLUE	BLAU	BLU	BLEU	SIN	BLÅ
G	GREEN	GRUN	VERDI	VERT	VIHREA	GRÖN
BN	BROWN	BRAUN	BRUNO	BRUN	RUSHEA	BRUN
O	ORANGE	ORANGE	ARANCIO	ORANGE	ORANSSI	ORANS
Y	YELLOW	GELB	GIALLO	JAUNE	KELT	GUL
W	WHITE	WEISS	BIANCO	BLANC	VALK	VIT
BLK	BLACK	SCHWARZ	NERO	NOIR	MUSTA	SVART
V	VIOLET	LILA	VIOLETTA	VIOLET	VIOLET	VIOLET