SM212 Final Examination: Multiple Choice Section

15 December 2014, 1930

Calculators are not permitted on the Multiple Choice Section of the Final Examination. A Laplace Transform/Fourier Series page is part of the exam package and may be used on both the Multiple Choice and Free Response Sections. No other note sheets are allowed.

1. Which of the following differential equations is linear?

   a) $\frac{dy}{dx} = \sin(xy)$ b) $\frac{dy}{dx} = x - y^2$ c) $\frac{dy}{dx} = x^2 - 4y$ d) $\frac{dy}{dx} = e^{x+y}$

2. An integrating factor for the linear differential equation $2x^5 \frac{dy}{dx} = 8x^4 y + 7$ is

   a) e^{2x^5} b) e^{-2x^5} c) x^4 d) x^{-4}

3. Newton's law of cooling states that the rate of cooling of an object is proportional to the difference between the temperature of the object and its surroundings. A cup of coffee at $200°F$ is placed in a room of temperature $70°F$. After ten minutes it is placed in a refrigerator with a temperature of $40°F$. An initial value problem for the temperature $T(t)$ of the coffee is

   a) $\frac{dT}{dt} = k(70 - 40U(t-10) - T), T(0) = 200$

   b) $\frac{dT}{dt} = k(70 - 30U(t-10) - T), T(0) = 200$

   c) $\frac{dT}{dt} = k(70 - T) - 40, T(0) = 70$

   d) $\frac{dT}{dt} = k(70 - 40U(t-10) - T), T(0) = 70$

4. A solution to the differential equation $y'' + 4y' + 13y = 0$ is $y(t) =$

   a) $e^{2t}\cos 3t$ b) $te^{2t}\cos 3t$ c) $e^{-2t}\sin 3t$ d) None of these

5. A 2lb weight when hung on a spring stretches it 4in upon coming to equilibrium. From equilibrium the weight is given an upward velocity of 1 ft per second. The motion of the weight is resisted by a damping force numerically equal to twice the instantaneous velocity. Take the acceleration due to gravity to be 32 feet per second squared. The initial value problem for the displacement of the weight from equilibrium is

   a) $2x'' + 2x' + 6x = 0, x(0) = \frac{1}{3}, x'(0) = 1$

   b) $\frac{1}{16}x'' + 2x' + \frac{1}{2}x = 0, x(0) = 0, x'(0) = -1$

   c) $x'' + 32x' + 96x = 0, x(0) = 0, x'(0) = -1$

   d) $2x'' + 2x' + 6x = 32, x(0) = 0, x'(0) = 1$

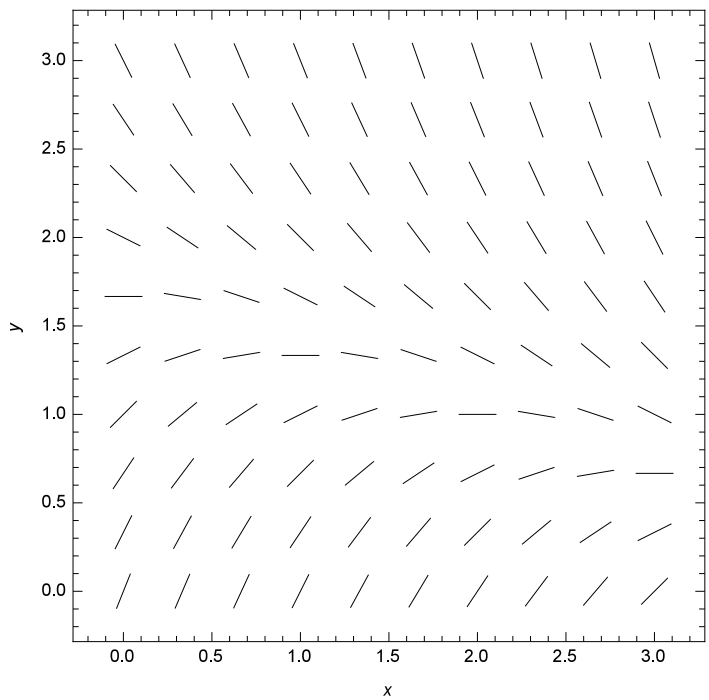

6. For the direction field shown above the Euler method approximation to $y(3)$ with an initial condition $y(0) = 1$ and a step size of $h = 1$ is

   a) 0 b) 1 c) 2 d) 3

7. Which of the following could be the differential equation that generated the direction field above?

   a) $y' = \frac{1}{2}x^2 + \frac{3}{2}y^2 + \frac{5}{2}$ b) $y' = -\frac{1}{2}x - \frac{3}{2}y + \frac{5}{2}$

   c) $y' = 1 + y^2$ d) $y' = 2 - y^2$

8. The displacement of a damped mass-spring system without external force is given by $x(t) = te^{-2t}$. The system is

   a) Critically damped b) Underdamped c) Overdamped

   d) The type of damping cannot be determined without knowing the coefficients of the differential equation.

9. The appropriate guess for the particular solution to the differential equation $y'' + 3y' + 2y = 2x + 3e^{-x}$ is $y_p =$

   a) $A + Bx + Ce^{-x}$ b) $A + Bx + Cxe^{-x}$

   c) $Ax + Bx^2 + Ce^{-x}$ d) $Ax + Bx^2 + Cxe^{-x}$

10. A mass-spring system with external force is governed by the differential equation $4x'' + 16x = 5\cos\omega t$. The resonant angular frequency of the system is $\omega =$

    a) 0 b) 1 c) 2 d) 4

11. If the Laplace transform of a function $f(t)$ is $F(s) = \frac{s}{s^4+4}$, then $\mathcal{L}\{e^{-t}f(t)\} =$

    a) $\cos^2 t$ b) $\frac{s+1}{(s+1)^4+4}$ c) $\frac{2}{(s+1)^4+4}$ d) $\frac{s}{(s^4+1)(s+1)}$

12. $\mathcal{L}^{-1}\left\{\frac{s+3}{s^2+4s+8}\right\} =$

    a) $e^{-2t}\cos 2t + \frac{3}{2}e^{-2t}\sin 2t$ b) $e^{-2t} + 2te^{-2t}$ c) $e^{-2t}\cos 2t + \frac{1}{2}e^{-2t}\sin 2t$
    d) $e^{-t}\cos 3t + \frac{3}{2}e^{-t}\sin 3t$

13. The convolution $e^t * e^t =$

    a) e^{2t} b) te^t c) 1 d) $\frac{1}{(s-1)^2}$

14. The solution to the initial value problem $x'' + 4x = \delta(t-\pi), x(0) = 0, x'(0) = 0$ is

    a) $\cos(2t - 2\pi)\, U(t-\pi)$ b) $\frac{1}{2}\sin 2t\, U(t-\pi)$

    c) $\sin(2t) + \cos(2t - 2\pi)\, U(t-\pi)$ d) $cos(2t) + \cos(2t - 2\pi)\, U(t-\pi)$

15. If $A = \begin{bmatrix} 1 & 3 \\ 2 & 4 \\ 5 & 6 \end{bmatrix}$, $B = \begin{bmatrix} 1 & 2 \\ 4 & 3 \end{bmatrix}$, and $C = \begin{bmatrix} 1 \\ 2 \end{bmatrix}$, which of the following products does not exist

    a) AB b) BA c) AC d) BC

16. For the system $A\overrightarrow{x} = \overrightarrow{b}$ with $A = \begin{bmatrix} 2 & 4 & -2 \\ 4 & 2 & -2 \\ 8 & 10 & -6 \end{bmatrix}$ and $\overrightarrow{b} = \begin{bmatrix} 0 \\ 1 \\ 1 \end{bmatrix}$ the reduced row echelon form of $[A|b]$ is $\begin{bmatrix} 1 & 0 & -\frac{1}{3} & \frac{1}{3} \\ 0 & 1 & -\frac{1}{3} & -\frac{1}{6} \\ 0 & 0 & 0 & 0 \end{bmatrix}$. Thus the system has

a) No solution b) The unique solution $\vec{x} = \begin{bmatrix} \frac{1}{3} \\ -\frac{1}{6} \\ 0 \end{bmatrix}$

c) The unique solution $\vec{x} = \begin{bmatrix} -\frac{1}{3} \\ \frac{1}{6} \\ 0 \end{bmatrix}$ d) Infinitely many solutions

17. If A is a 2×2 matrix, and the product $A \begin{bmatrix} 1 \\ -2 \end{bmatrix} = \begin{bmatrix} -2 \\ 4 \end{bmatrix}$, then an eigenvalue for A is

a) -2 b) -1 c) 0 d) 1

18. A periodic function is given over one period by $f(t) = \begin{cases} -1, -1 < t < 0 \\ 1, 0 \leq t \leq 1 \end{cases}$. Which of the following statements is correct for the Fourier series $\frac{a_0}{2} + \sum_{n=1}^{\infty} \left(a_n \cos \frac{n\pi t}{p} + b_n \sin \frac{n\pi t}{p} \right)$ of $f(t)$

a) $b_n = 0$ for $n = 1, 2, 3, \ldots$.

b) $b_n = 0$ for all odd integers n, but not for any even integers n.

c) $a_n = 0$ for $n = 0, 1, 2, \ldots$.

d) $a_n = 0$ for $n = 1, 2, 3, \ldots$, but $a_0 \neq 0$.

19. At the point $t = 3$ the Fourier series of the periodic function given over one period by $f(t) = t^2,\ -1 \leq t \leq 1$ converges to

a) $-\frac{1}{2}$ b) 0 c) $\frac{1}{2}$ d) 1

20. Temperature $u(x,t)$ on a metal bar of length 4 is governed by the equations

$$\frac{\partial u}{\partial t} = \frac{\partial^2 u}{\partial x^2}$$
$$\frac{\partial u}{\partial x}(0,t) = 0, \frac{\partial u}{\partial x}(4,t) = 0$$
$$u(x,0) = 100, 0 \leq x \leq 4.$$

The solution to this problem has the form $u(x,t) = A_0 + \sum_{n=1}^{\infty} A_n e^{-\left(\frac{n\pi}{4}\right)^2 t} \cos \frac{n\pi x}{4}$ where

a) $A_0 = 100, A_n = 0, n \geq 1$ b) $A_0 = 0, A_n = \frac{(-1)^n}{n}, n \geq 1$

c) $A_0 = 100, A_n = \frac{1-(-1)^n}{n^2}, n \geq 1$ d) None of these.

SM212 Final Examination: Free Response

15 December 2014, 1930

Calculators are permitted on the Free Response part of the Final Examination.

1. (a) Find the explicit solution to the initial value problem
   $\dfrac{dy}{dx} - 2x = 2xy^2,\ y(0) = 1.$
   (b) Find the explicit general solution to $(\sin x)\,\frac{dy}{dx} - (\cos x)\,y = \sin^2 x$.

2. A tank contains 100 gallons of water with 50 lbs of salt dissolved in it. Saltwater with a concentration of 5 lb/gal is pumped into the tank at a rate of 1 gal/min. The well-stirred mixture is pumped out at the faster rate of 2 gal/min.

   (a) Express the volume of water in the tank as a function of time.
   (b) Find the amount, in pounds, of salt in the tank as a function of time.
   (c) At what time does the tank contain the largest amount of salt?

3. Use undetermined coefficients, to solve the initial value problem

$$y'' + 6y' + 8y = 12e^{-2x},\ y(0) = -1,\ y'(0) = 2.$$

4. (a) Use the convolution theorem to find $\mathcal{L}^{-1}\left\{\frac{1}{(s^2+1)^2}\right\}$. State clearly what integral you are evaluating to obtain your answer.
   (b) Use Laplace transforms to solve the initial value problem

$$y'' + y = \sin t,\ y(0) = 0,\ y'(0) = -1$$

   This initial value problem represents an undamped mass-spring system at resonance. What feature of your solution is characteristic of resonance?

5. (a) Use eigenvalues/eigenvectors to find the solution to the initial value problem

$$\begin{aligned} \frac{dx}{dt} &= 5x + y \\ \frac{dy}{dt} &= -2x + 2y + 20e^{-t} \\ x(0) = 0,\ y(0) &= 0 \end{aligned}$$

(b) For the electrical network shown below find a system of differential equations in the two unknowns i_2, the current in the middle branch, and q_3, the charge on the capacitor. **DO NOT SOLVE** the system.

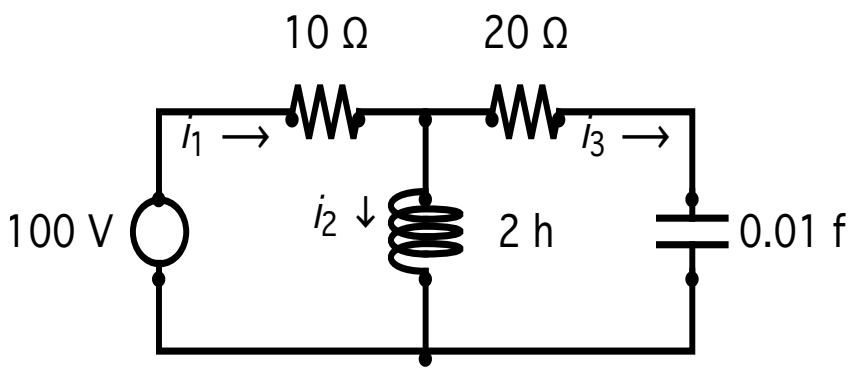

6. (a) Find the Fourier sine series of the function $f(x) = \begin{cases} 100, & 0 \le x \le 1, \\ 0, & 1 < x \le 2 \end{cases}$.

(b) The temperature $u(x,t)$ on a thin bar satisfies the following conditions

$$\begin{aligned} &\tfrac{\partial u}{\partial t} = 4\tfrac{\partial^2 u}{\partial x^2}, \\ &u(0,t) = u(2,t) = 0,\ t > 0, \\ &u(x,0) = f(x),\ 0 \le x \le 2 \end{aligned}$$

where $f(x)$ is given in part (a)

i. Use your answer in a) to find $u(x,t)$. Show all steps of the separation of variables process clearly. Write your answer in summation notation.

ii. Use the first two non-zero terms of your answer in part b(i) to find the approximate temperature at the middle of the bar at time $t = 0.1$.

SM212 Final Examination: Multiple Choice Section Answer Key

15 December 2014, 1930

Calculators are not permitted on the Multiple Choice Section of the Final Examination. A Laplace Transform/Fourier Series page is part of the exam package and may be used on both the Multiple Choice and Free Response Sections. No other note sheets are allowed.

1. Which of the following differential equations is linear?

   a) $\frac{dy}{dx} = \sin(xy)$ b) $\frac{dy}{dx} = x - y^2$ c) $\frac{dy}{dx} = x^2 - 4y$ d) $\frac{dy}{dx} = e^{x+y}$

   Ans: C

2. An integrating factor for the linear differential equation $2x^5 \frac{dy}{dx} = 8x^4 y + 7$ is

   a) e^{2x^5} b) e^{-2x^5} c) x^4 d) x^{-4}

   Ans: D $\frac{dy}{dx} - \frac{4}{x}y = \frac{7}{2}x^{-5}, \mu = \exp\left(-\int \frac{4}{x}dx\right) = x^{-4}$

3. Newton's law of cooling states that the rate of cooling of an object is proportional to the difference between the temperature of the object and its surroundings. A cup of coffee at $200°F$ is placed in a room of temperature $70°F$. After ten minutes it is placed in a refrigerator with a temperature of $40°F$. An initial value problem for the temperature $T(t)$ of the coffee is

   a) $\frac{dT}{dt} = k(70 - 40U(t-10) - T), T(0) = 200$

   b) $\frac{dT}{dt} = k(70 - 30U(t-10) - T), T(0) = 200$

   c) $\frac{dT}{dt} = k(70 - T) - 40, T(0) = 70$

   d) $\frac{dT}{dt} = k(70 - 40U(t-10) - T), T(0) = 70$

   Ans: B

4. A solution to the differential equation $y'' + 4y' + 13y = 0$ is $y(t) =$

   a) $e^{2t}\cos 3t$ b) $te^{2t}\cos 3t$ c) $e^{-2t}\sin 3t$ d) None of these

   Ans: C

5. A 2lb weight when hung on a spring stretches it 4in upon coming to equilibrium. From equilibrium the weight is given an upward velocity of 1 ft per second. The motion of the weight is resisted by a damping force numerically equal to twice the instantaneous velocity. Take the acceleration due to gravity to be 32 feet per second squared. The initial value problem for the displacement of the weight from equilibrium is

   a) $2x'' + 2x' + 6x = 0, x(0) = \frac{1}{3}, x'(0) = 1$

   b) $\frac{1}{16}x'' + 2x' + \frac{1}{2}x = 0, x(0) = 0, x'(0) = -1$

   c) $x'' + 32x' + 96x = 0, x(0) = 0, x'(0) = -1$

   d) $2x'' + 2x' + 6x = 32, x(0) = 0, x'(0) = 1$

   Ans: C $2 = 32m \to m = \frac{1}{16}, 2 = \frac{1}{3}k \to k = 6, \frac{1}{16}x'' + 2x' + 6x = 0$

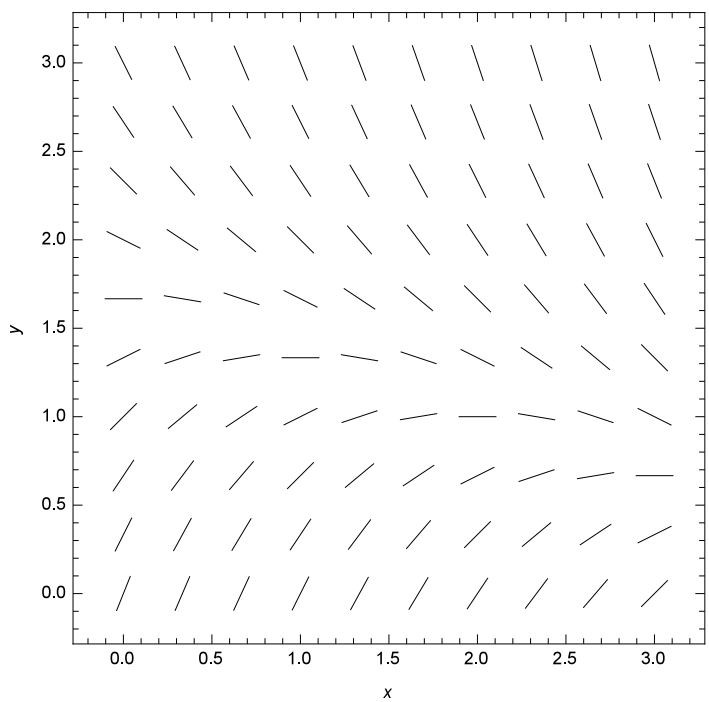

6. For the direction field shown above the Euler method approximation to $y(3)$ with an initial condition $y(0) = 1$ and a step size of $h = 1$ is

   a) 0 b) 1 c) 2 d) 3

   Ans: B

7. Which of the following could be the differential equation that generated the direction field above?

   a) $y' = \frac{1}{2}x^2 + \frac{3}{2}y^2 + \frac{5}{2}$ b) $y' = -\frac{1}{2}x - \frac{3}{2}y + \frac{5}{2}$

   c) $y' = 1 + y^2$ d) $y' = 2 - y^2$

   Ans: B

8. The displacement of a damped mass-spring system without external force is given by $x(t) = te^{-2t}$. The system is

   a) Critically damped b) Underdamped c) Overdamped

   d) The type of damping cannot be determined without knowing the coefficients of the differential equation.

   Ans: A

9. The appropriate guess for the particular solution to the differential equation $y'' + 3y' + 2y = 2x + 3e^{-x}$ is $y_p =$

   a) $A + Bx + Ce^{-x}$ b) $A + Bx + Cxe^{-x}$

   c) $Ax + Bx^2 + Ce^{-x}$ d) $Ax + Bx^2 + Cxe^{-x}$

   Ans: B $y_c = c_1e^{-x} + c_2e^{-2x}, y_p = A + Bx + Ce^{-x} \to A + Bx + Cxe^{-x}$

10. A mass-spring system with external force is governed by the differential equation $4x'' + 16x = 5\cos\omega t$. The resonant angular frequency of the system is $\omega =$

    a) 0 b) 1 c) 2 d) 4

    Ans: C

11. If the Laplace transform of a function $f(t)$ is $F(s) = \frac{s}{s^4+4}$, then $\mathcal{L}\{e^{-t}f(t)\} =$

    a) $\cos^2 t$ b) $\frac{s+1}{(s+1)^4+4}$ c) $\frac{2}{(s+1)^4+4}$ d) $\frac{s}{(s^4+1)(s+1)}$

    Ans: B

12. $\mathcal{L}^{-1}\left\{\frac{s+3}{s^2+4s+8}\right\} =$

    a) $e^{-2t}\cos 2t + \frac{3}{2}e^{-2t}\sin 2t$ b) $e^{-2t} + 2te^{-2t}$ c) $e^{-2t}\cos 2t + \frac{1}{2}e^{-2t}\sin 2t$
    d) $e^{-t}\cos 3t + \frac{3}{2}e^{-t}\sin 3t$

    Ans: C

13. The convolution $e^t * e^t =$

    a) e^{2t} b) te^t c) 1 d) $\frac{1}{(s-1)^2}$

    Ans: B

14. The solution to the initial value problem $x'' + 4x = \delta(t-\pi), x(0) = 0, x'(0) = 0$ is

    a) $\cos(2t - 2\pi)\, U(t-\pi)$ b) $\frac{1}{2}\sin 2t\, U(t-\pi)$

    c) $\sin(2t) + \cos(2t - 2\pi)\, U(t-\pi)$ d) $cos(2t) + \cos(2t - 2\pi)\, U(t-\pi)$

    Ans: B

15. If $A = \begin{bmatrix} 1 & 3 \\ 2 & 4 \\ 5 & 6 \end{bmatrix}$, $B = \begin{bmatrix} 1 & 2 \\ 4 & 3 \end{bmatrix}$, and $C = \begin{bmatrix} 1 \\ 2 \end{bmatrix}$, which of the following products does not exist

a) AB b) BA c) AC d) BC

Ans: B

16. For the system $A\overrightarrow{x} = \overrightarrow{b}$ with $A = \begin{bmatrix} 2 & 4 & -2 \\ 4 & 2 & -2 \\ 8 & 10 & -6 \end{bmatrix}$ and $\overrightarrow{b} = \begin{bmatrix} 0 \\ 1 \\ 1 \end{bmatrix}$ the reduced row echelon form of $[A|b]$ is $\begin{bmatrix} 1 & 0 & -\frac{1}{3} & \frac{1}{3} \\ 0 & 1 & -\frac{1}{3} & -\frac{1}{6} \\ 0 & 0 & 0 & 0 \end{bmatrix}$. Thus the system has

a) No solution b) The unique solution $\vec{x} = \begin{bmatrix} \frac{1}{3} \\ -\frac{1}{6} \\ 0 \end{bmatrix}$

c) The unique solution $\vec{x} = \begin{bmatrix} -\frac{1}{3} \\ \frac{1}{6} \\ 0 \end{bmatrix}$ d) Infinitely many solutions

Ans: D

17. If A is a 2×2 matrix, and the product $A \begin{bmatrix} 1 \\ -2 \end{bmatrix} = \begin{bmatrix} -2 \\ 4 \end{bmatrix}$, then an eigenvalue for A is

a) -2 b) -1 c) 0 d) 1

Ans: A

18. A periodic function is given over one period by $f(t) = \begin{cases} -1, -1 < t < 0 \\ 1, 0 \leq t \leq 1 \end{cases}$. Which of the following statements is correct for the Fourier series $\frac{a_0}{2} + \sum_{n=1}^{\infty} \left(a_n \cos \frac{n\pi t}{p} + b_n \sin \frac{n\pi t}{p} \right)$ of $f(t)$

a) $b_n = 0$ for $n = 1, 2, 3, \ldots$.

b) $b_n = 0$ for all odd integers n, but not for any even integers n.

c) $a_n = 0$ for $n = 0, 1, 2, \ldots$.

d) $a_n = 0$ for $n = 1, 2, 3, \ldots$, but $a_0 \neq 0$.

Ans: C

19. At the point $t = 3$ the Fourier series of the periodic function given over one period by $f(t) = t^2$, $-1 \leq t \leq 1$ converges to

a) $-\frac{1}{2}$ b) 0 c) $\frac{1}{2}$ d) 1

Ans: D

20. Temperature $u(x,t)$ on a metal bar of length 4 is governed by the equations

$$\begin{aligned} \frac{\partial u}{\partial t} &= \frac{\partial^2 u}{\partial x^2} \\ \frac{\partial u}{\partial x}(0,t) = 0, \frac{\partial u}{\partial x}(4,t) &= 0 \\ u(x,0) &= 100, 0 \leq x \leq 4. \end{aligned}$$

The solution to this problem has the form $u(x,t) = A_0 + \sum_{n=1}^{\infty} A_n e^{-\left(\frac{n\pi}{4}\right)^2 t} \cos \frac{n\pi x}{4}$ where

a) $A_0 = 100, A_n = 0, n \geq 1$ b) $A_0 = 0, A_n = \frac{(-1)^n}{n}, n \geq 1$

c) $A_0 = 100, A_n = \frac{1-(-1)^n}{n^2}, n \geq 1$ d) None of these.

Ans: A

SM212 Final Examination: Free Response Answer Key

15 December 2014, 1930

Calculators are permitted on the Free Response part of the Final Examination.

1. (a) Find the explicit solution to the initial value problem
$\dfrac{dy}{dx} - 2x = 2xy^2,\ y(0) = 1.$
Ans: $\frac{dy}{1+y^2} = 2xdx \rightarrow \arctan y = x^2 + C \rightarrow$IC $C = \arctan 1 = \frac{\pi}{4}$,$\boxed{y = \tan\left(x^2 + \frac{\pi}{4}\right)}$

   (b) Find the explicit general solution to $(\sin x)\frac{dy}{dx} - (\cos x)\, y = \sin^2 x$.
Ans: Standard form: $\frac{dy}{dx} - \frac{\cos x}{\sin x} y = \sin x$,Integrating factor: $\mu = \exp\left(-\int \frac{\cos x}{\sin x} dx\right) = \frac{1}{\sin x} \rightarrow \frac{d}{dx}\left(\frac{y}{\sin x}\right) = 1 \rightarrow \frac{y}{\sin x} = x + C \rightarrow$$\boxed{y = (x + C)\sin x}$

2. A tank contains 100 gallons of water with 50 lbs of salt dissolved in it. Saltwater with a concentration of 5 lb/gal is pumped into the tank at a rate of 1 gal/min. The well-stirred mixture is pumped out at the faster rate of 2 gal/min.

   (a) Express the volume of water in the tank as a function of time. *Ans*: $\boxed{V = 100 - t}$

   (b) Find the amount, in pounds, of salt in the tank as a function of time. *Ans*: $\frac{dA}{dt} = 5 - 2\frac{A}{100-t}$ is first order linear. Standard form: $\frac{dA}{dt} + 2\frac{A}{100-t} = 5$,Integrating factor: $\mu = \exp\left(\int \frac{2}{100-t} dt\right) = \frac{1}{(t-100)^2} \rightarrow \frac{d}{dt}\left(\frac{A}{(t-100)^2}\right) = \frac{5}{(t-100)^2} \rightarrow \frac{A}{(t-100)^2} = \int \frac{5}{(t-100)^2} dt = -\frac{5}{t-100} + C$. $A = -5(t - 100) + C(t-100)^2$.$A(0) = 50 \rightarrow 500 + 10000C = 50 \rightarrow C = -\frac{450}{10000} \rightarrow$$\boxed{A = -5(t-100) - \frac{45}{1000}(t-100)^2}$

   (c) At what time does the tank contain the largest amount of salt? *Ans*: $A'(t) = -5 - \frac{9}{100}(t - 100) = 0$, $t = \frac{400}{9} =$$\boxed{44.444\text{min}}$

3. Use undetermined coefficients, to solve the initial value problem

$$y'' + 6y' + 8y = 12e^{-2x}, y(0) = -1, y'(0) = 2.$$

Ans: Solve associated homogeneous: $y'' + 6y' + 8y = 0 \to y_c = c_1e^{-2x} + c_2e^{-4x}$.

Form of theparticular is $y_p = Ae^{-2x}$, but this is part of $y_c \to y_p = Axe^{-2x} \to y_p' = Ae^{-2x} - 2Axe^{-2x}, y_p'' = -4Ae^{-2x} + 4Axe^{-2x}$.

Substitute into DE: $-4Ae^{-2x}+4Axe^{-2x}+6\left(Ae^{-2x} - 2Axe^{-2x}\right)+8Axe^{-2x} = 12e^{-2x} \to 2Ae^{-2x} = 12e^{-2x} \to A = 6 \to y = y_c + y_p = c_1e^{-2x} + c_2e^{-4x} + 6xe^{-2x}$.

Fit initial conditions: $y(0) = -1 \to c_1 + c_2 = -1.y'(x) = -2c_1e^{-2x} - 4c_2e^{-4x} - 12xe^{-2x} + 6e^{-2x}, y'(0) = 2 \to -2c_1 - 4c_2 + 6 = 2$. Solve $\{c_1 + c_2 = -1, -2c_1 - 4c_2 = -4\} \to c_1 = -4, c_2 = 3 \to \boxed{y(x) = -4e^{-2x} + 3e^{-4x} + 6xe^{-2x}}$

4. (a) Use the convolution theorem to find $\mathcal{L}^{-1}\left\{\frac{1}{(s^2+1)^2}\right\}$. State clearly what integral you are evaluating to obtain your answer.

   Ans: $\mathcal{L}^{-1}\left\{\frac{1}{(s^2+1)^2}\right\} = \sin t \star \sin t = \int_0^t \sin(\tau)\sin(t-\tau)d\tau = \boxed{\frac{1}{2}\sin t - \frac{1}{2}t\cos t}$

   (b) Use Laplace transforms to solve the initial value problem

$$y'' + y = \sin t,\ y(0) = 0,\ y'(0) = -1$$

   This initial value problem represents an undamped mass-spring system at resonance. What feature of your solution is characteristic of resonance?

   Ans: Take LT's: $s^2Y(s) - sy(0) - y'(0) + Y(s) = \frac{1}{s^2+1} \to Y(s) = -\frac{1}{s^2+1} + \frac{1}{(s^2+1)^2} \to y(t) = \mathcal{L}^{-1}\left\{-\frac{1}{s^2+1} + \frac{1}{(s^2+1)^2}\right\} = -\sin t + \frac{1}{2}\sin t - \frac{1}{2}t\cos t = -\frac{1}{2}\sin t - \frac{1}{2}t\cos t$ from part (a). The $-\frac{1}{2}t\cos t$ term causes the oscillations to grow without bound.

5. (a) Use eigenvalues/eigenvectors to find the solution to the initial value problem

$$\begin{aligned} \frac{dx}{dt} &= 5x + y \\ \frac{dy}{dt} &= -2x + 2y + 20e^{-t} \\ x(0) &= 0 \\ y(0) &= 0 \end{aligned}$$

Ans: Solve associated homogeneous: $\begin{bmatrix} x \\ y \end{bmatrix}' = \begin{bmatrix} 5 & 1 \\ -2 & 2 \end{bmatrix} \begin{bmatrix} x \\ y \end{bmatrix}$ The eigenvalues of $A = \begin{bmatrix} 5 & 1 \\ -2 & 2 \end{bmatrix}, \lambda = 3, 4$ Row reduce: $\begin{bmatrix} 5-3 & 1 \\ -2 & 2-3 \end{bmatrix} \to \begin{bmatrix} 1 & \frac{1}{2} \\ 0 & 0 \end{bmatrix}$ gives $\vec{v} = \begin{bmatrix} 1 \\ -2 \end{bmatrix}$ as an eigenvector and $\begin{bmatrix} 5-4 & 1 \\ -2 & 2-4 \end{bmatrix} \to \begin{bmatrix} 1 & 1 \\ 0 & 0 \end{bmatrix}$ gives $\vec{v} = \begin{bmatrix} 1 \\ -1 \end{bmatrix}$ as an eigenvector. Thus the general solution to the homogeneous is $\vec{X}_c = c_1 \begin{bmatrix} 1 \\ -2 \end{bmatrix} e^{3t} + c_2 \begin{bmatrix} 1 \\ -1 \end{bmatrix} e^{4t}$

The fundamental matrix is $\Phi = \begin{bmatrix} e^{3t} & e^{4t} \\ -2e^{3t} & -e^{4t} \end{bmatrix}$

A particular solution is $\vec{X}_p = \begin{bmatrix} e^{3t} & e^{4t} \\ -2e^{3t} & -e^{4t} \end{bmatrix} \int \begin{bmatrix} e^{3t} & e^{4t} \\ -2e^{3t} & -e^{4t} \end{bmatrix}^{-1} \begin{bmatrix} 0 \\ 20e^{-t} \end{bmatrix} dt = \begin{bmatrix} e^{-t} \\ -6e^{-t} \end{bmatrix}$

The general solution is $\vec{X} = c_1 \begin{bmatrix} 1 \\ -2 \end{bmatrix} e^{3t} + c_2 \begin{bmatrix} 1 \\ -1 \end{bmatrix} e^{4t} + \begin{bmatrix} e^{-t} \\ -6e^{-t} \end{bmatrix}$

The initial conditions give $\begin{bmatrix} 1 & 1 \\ -2 & -1 \end{bmatrix} \begin{bmatrix} c_1 \\ c_2 \end{bmatrix} + \begin{bmatrix} 1 \\ -6 \end{bmatrix} = \begin{bmatrix} 0 \\ 0 \end{bmatrix} \to \begin{bmatrix} c_1 \\ c_2 \end{bmatrix} = \begin{bmatrix} 1 & 1 \\ -2 & -1 \end{bmatrix}^{-1} \begin{bmatrix} -1 \\ 6 \end{bmatrix} = \begin{bmatrix} -5 \\ 4 \end{bmatrix}$

Thus $\boxed{x(t) = e^{-t} - 5e^{3t} + 4e^{4t}, y(t) = 10e^{3t} - 6e^{-t} - 4e^{4t}}$

(b) For the electrical network shown below find a system of differential equations in the two unknowns i_2, the current in the middle branch, and q_3, the charge on the capacitor. **DO NOT SOLVE** the system.

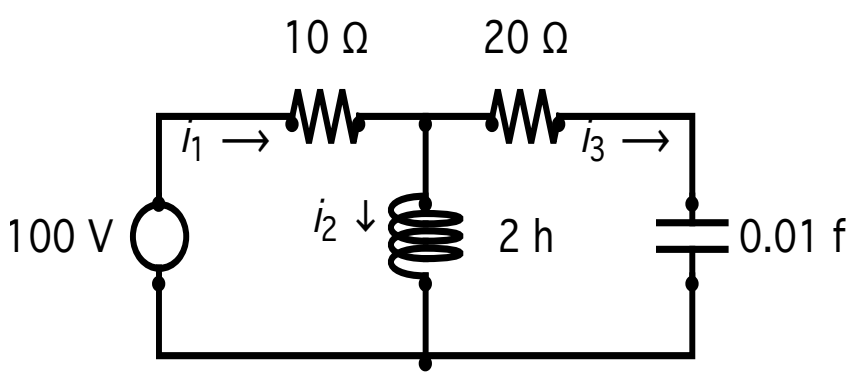

Ans: Apply Kirchoff's second law to the
Left loop: $10i_1 + 2i_2' - 100 = 0$, Right loop: $20i_3 + \frac{1}{0.01}q_3 - 2i_2' = 0$, Outer loop: $10i_1 + 20i_3 + \frac{1}{0.01}q_3 - 100 = 0$
Since $i_3 = q_3', i_1 = i_2 + i_3 = i_2 + q_3'$ any two of the following will suffice:
$10i_2 + 10q_3' + 2i_2' = 100, 20q_3' + 100q_3 - 2i_2' = 0, 10i_2 + 30q_3' + 100q_3 = 100$

6. (a) Find the Fourier sine series of the function $f(x) = \begin{cases} 100, & 0 \le x \le 1, \\ 0, & 1 < x \le 2 \end{cases}$.

Ans: $B_n = \frac{2}{2}\int_0^2 f(x)\sin\frac{n\pi x}{2}dx = 100\int_0^1 \sin\frac{n\pi x}{2}dx = \frac{200}{n\pi}(1-\cos\frac{n\pi}{2}) \to \boxed{f(x) \sim \sum_{n=1}^{\infty}\frac{200}{n\pi}(1-\cos\frac{n\pi}{2})\sin\frac{n\pi x}{2}}$

(b) The temperature $u(x,t)$ on a thin bar satisfies the following conditions

$$\begin{aligned} &\frac{\partial u}{\partial t} = 4\frac{\partial^2 u}{\partial x^2}, \\ &u(0,t) = u(2,t) = 0,\ t > 0, \\ &u(x,0) = f(x),\ 0 \le x \le 2 \end{aligned}$$

where $f(x)$ is given in part (a)

i. Use your answer in a) to find $u(x,t)$. Show all steps of the separation of variables process clearly. Write your answer in summation notation.
Ans: 1. Find solutions to pde of the form $u(x,t) = X(x)T(t)$: $\frac{\partial u}{\partial t} = 4\frac{\partial^2 u}{\partial x^2} \to X(x)T'(t) = 4X''(x)T(t) \to \frac{T'(t)}{T(t)} = 4\frac{X''(x)}{X(x)} = \mu$, a constant.
T-equation: $T'(t) = \mu T(t) \to T(t) = Ce^{\mu t} \to \mu < 0$ so that the bar's temperature cools down to 0 degrees. Let $\mu = -\lambda^2 \to T(t) = Ce^{-\lambda^2 t}$.
X-equation: $4X''(x) + \lambda^2 X(x) = 0 \to X(x) = A\cos\frac{\lambda}{2}x + B\sin\frac{\lambda}{2}x \to u(x,t) = X(x)T(t) = \left(A\cos\frac{\lambda}{2}x + B\sin\frac{\lambda}{2}x\right)Ce^{-\lambda^2 t} = \left(A\cos\frac{\lambda}{2}x + B\sin\frac{\lambda}{2}x\right)e^{-\lambda^2 t}$.
2. Fit separated solutions to boundary conditions:
Left BC: $u(0,t) = 0 \to Ae^{-\lambda^2 t} = 0 \to A = 0$.
Update: $u(x,t) = B\sin\frac{\lambda}{2}xe^{-\lambda^2 t}$
Right BC: $u(2,t) = 0 \to B\sin\left(\frac{\lambda}{2}2\right)e^{-\lambda^2 t} = 0 \to \sin\lambda = 0 \to \lambda = n\pi$.
Update: $u(x,t) = B\sin\frac{n\pi x}{2}e^{-(n\pi)^2 t} = B\sin\frac{n\pi x}{2}e^{-(n\pi)^2 t}$
3. Superposition to get the general solution: $u(x,t) = \sum_{n=1}^{\infty} B_n \sin\frac{n\pi x}{2}e^{-(n\pi)^2 t}$.
4. Fit initial condition: $u(x,0) = \sum_{n=1}^{\infty} B_n \sin\frac{n\pi x}{2} = f(x) \to B_n$'s are the Fourier sine coefficients of $f(x)$ in part (a)$\to \boxed{u(x,t) = \sum_{n=1}^{\infty}\frac{200}{n\pi}(1-\cos\frac{n\pi}{2})\sin\frac{n\pi x}{2}e^{-(n\pi)^2 t}}$

ii. Use the first two non-zero terms of your answer in part b(i) to find the approximate temperature at the middle of the bar at time $t = 0.1$.
Ans: $u(1,0.1) \approx \frac{200}{\pi}(1-\cos\frac{\pi}{2})\sin\frac{\pi}{2}e^{-\pi^2 0.1} + \frac{200}{2\pi}(1-\cos\frac{2\pi}{2})\underbrace{\sin\frac{2\pi}{2}}_{=0}e^{-4\pi^2 0.1} + \frac{200}{3\pi}(1-\cos\frac{3\pi}{2})\sin\frac{3\pi}{2}e^{-9\pi^2 0.1} = 23.727 + 0 - 2.9449 \times 10^{-3} = \boxed{23.724°}$