Scattering Seminar – Emulator Design Discussion

Charles Nelson

June 23, 2014

USNA

Question . . .

. . . Of course . . .

. . . This is the inverse problem . . .

Bohren and Huffman, "Absoprtion and Scattering of Light by Small Particles," 1983

Question . . .

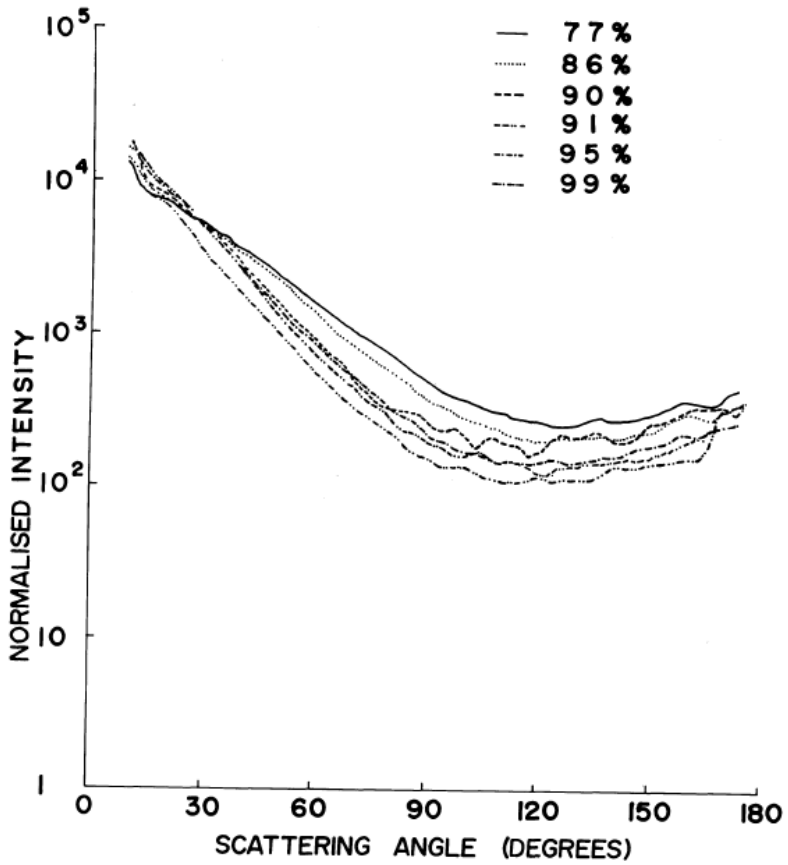
77%
86%
90%
91%
95%
99%
NORMALISED INTENSITY
10^5
10^4
10^3
10^2
10
1
0
30
60
90
120
150
180
SCATTERING ANGLE (DEGREES)

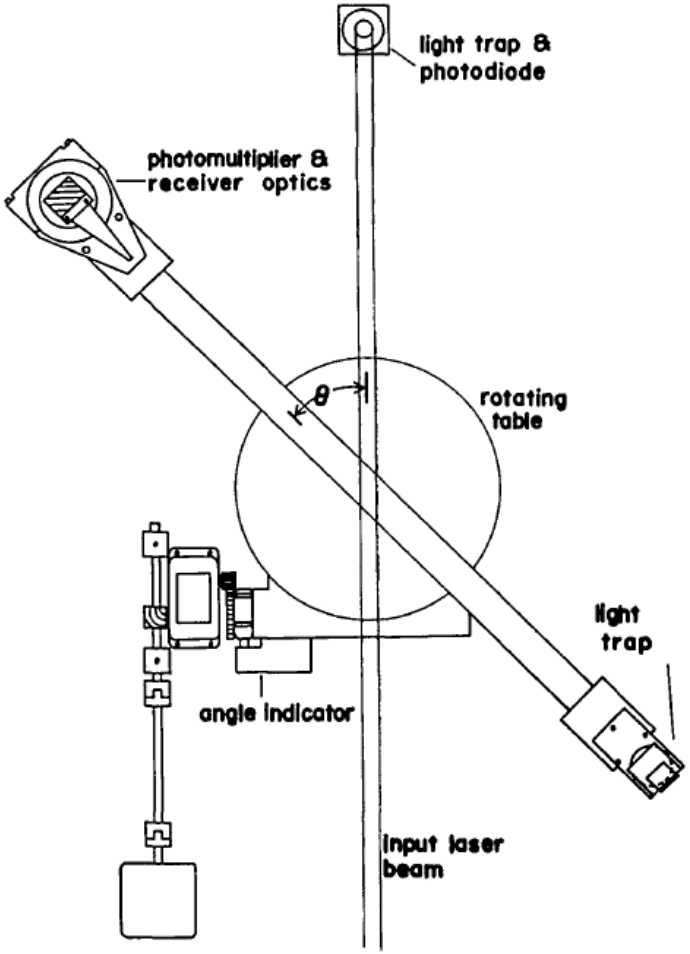

Fig. 1. Plan view of the nephelometer.

- Analyzed atmospheric air as a function of relative humidity (HAZE), clean air, and water droplet clouds (FOGS) using an ultrasonic nebulizer
- 50 mW He-Ne, 6 to 174 degrees, scattering volume defined by intersection of solid angle of receiver optics and the laser beam
- Receiver optics incorporates quarter-wave plate and linear polarizer in series → Four components of the Stokes vector measured with four suitable positions of the optical elements. Note: apparatus was designed to be used in the field as well.
- Used a controlled atmosphere enclosure, 1.5 m x 1.5 m x 0.5 m high – air filtering, circulation, and relative humidity control. Can inject water droplets.
- Light trap monitors optical thickness.
- Equilibrium state was able to be held as long as desired, and around a 2 hour time for repeated runs.
- Intensity(theta)/Intensity(launch) measured every degree with repeat runs then averaged. Similar measurements for the other Stokes vector components

$$\mathbf{I}(\theta) = \mathbf{D}(\theta)\mathbf{I}_0 V \csc\theta,$$

$$\begin{bmatrix} I(\theta) \\ Q(\theta) \\ U(\theta) \\ V(\theta) \end{bmatrix} = \begin{bmatrix} d_{11}(\theta) & d_{12}(\theta) & d_{13}(\theta) & d_{14}(\theta) \\ d_{21}(\theta) & d_{22}(\theta) & d_{23}(\theta) & d_{24}(\theta) \\ d_{31}(\theta) & d_{32}(\theta) & d_{33}(\theta) & d_{34}(\theta) \\ d_{41}(\theta) & d_{42}(\theta) & d_{43}(\theta) & d_{44}(\theta) \end{bmatrix} \begin{bmatrix} I_0 \\ Q_0 \\ U_0 \\ V_0 \end{bmatrix}.$$

$$\mathbf{F}(\theta) = \mathbf{D}(\theta) \Big/ \int_0^{\pi} d_{11}(\theta)d\theta,$$

$$\tilde{\mathbf{F}}(\theta) = \mathbf{F}(\theta)/f_{11}(\theta)$$

$$\tilde{\mathbf{F}}(\theta) = \begin{bmatrix} 1 & \tilde{f}_{12}(\theta) & \tilde{f}_{13}(\theta) & \tilde{f}_{14}(\theta) \\ \tilde{f}_{21}(\theta) & \tilde{f}_{22}(\theta) & \tilde{f}_{23}(\theta) & \tilde{f}_{24}(\theta) \\ \tilde{f}_{31}(\theta) & \tilde{f}_{32}(\theta) & \tilde{f}_{33}(\theta) & \tilde{f}_{34}(\theta) \\ \tilde{f}_{41}(\theta) & \tilde{f}_{42}(\theta) & \tilde{f}_{43}(\theta) & \tilde{f}_{44}(\theta) \end{bmatrix},$$

NOTE →

HOMOGENEOUS SPHERE

$$\begin{bmatrix} c_1(\theta) & c_2(\theta) & 0 & 0 \\ c_2(\theta) & c_1(\theta) & 0 & 0 \\ 0 & 0 & c_3(\theta) & -c_4(\theta) \\ 0 & 0 & c_4(\theta) & c_3(\theta) \end{bmatrix}.$$

R. G. QUINEY AND A. I. CARSWELL, "LABORATORY MEASUREMENTS OF LIGHT SCATTERING BY SIMULATED ATMOSPHERIC AEROSOLS," APPLIED OPTICS, VOL. 11, NO. 7, 1972.

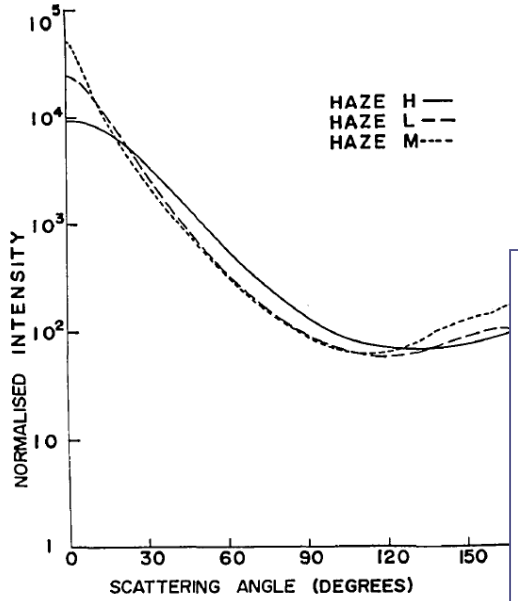

Fig. 5. $f_{11}(\theta)$ component of the matrix for three
(adapted from Deirmendjian).

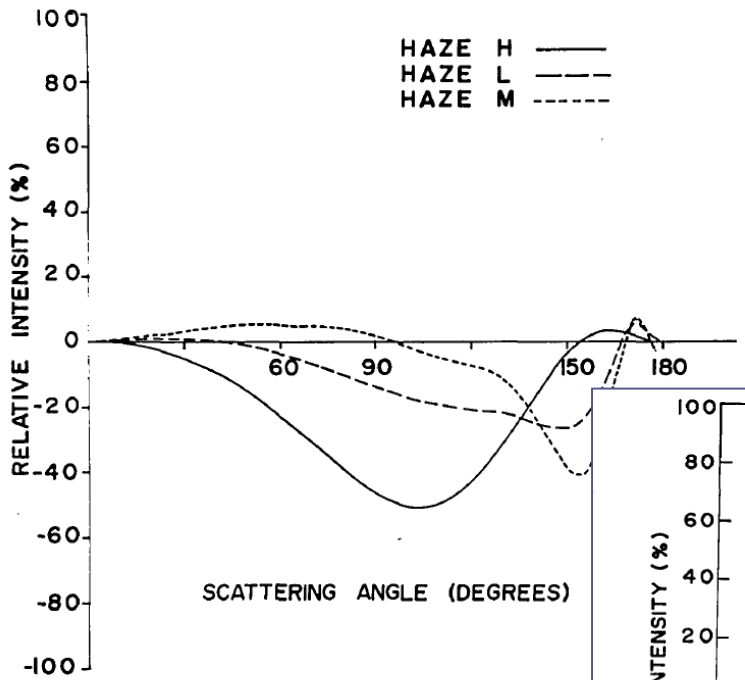

Fig. 7. $\tilde{f}_{12}(\theta)$ component of the matrix for three h
(adapted from Deirmendjian).

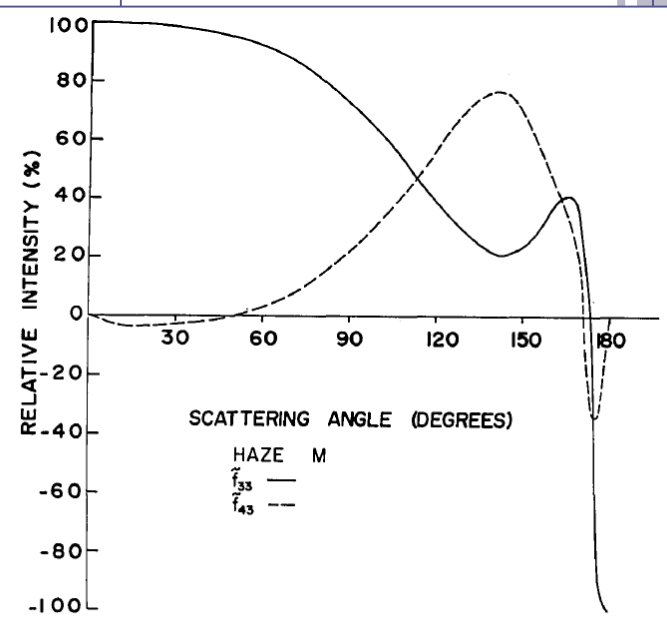

Fig. 10. $\tilde{f}_{33}(\theta)$ and $\tilde{f}_{43}(\theta)$ components of the reduced matrix for haze model M (adapted from Deirmendjian).

R. G. Quiney and A. I. Carswell, "Laboratory Measurements of Light Scattering by Simulated Atmospheric Aerosols," Applied Optics, Vol. 11, No. 7, 1972.

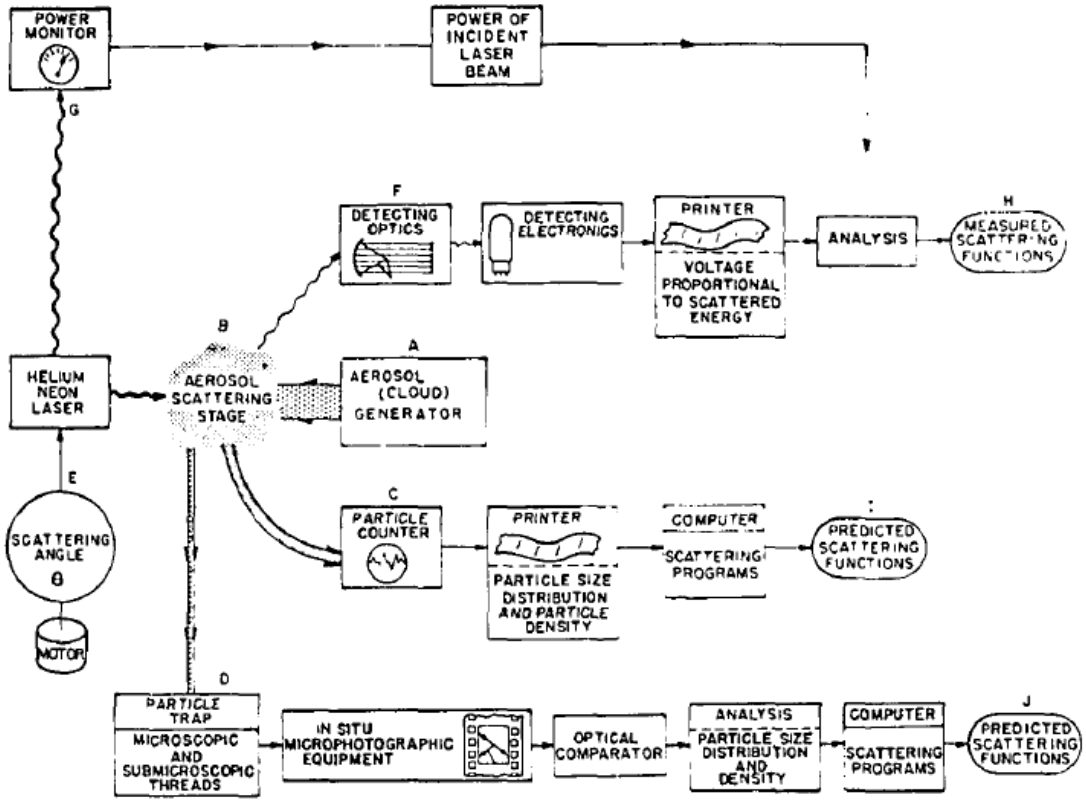

Fig. 1. Aerosol optical scattering experiment.

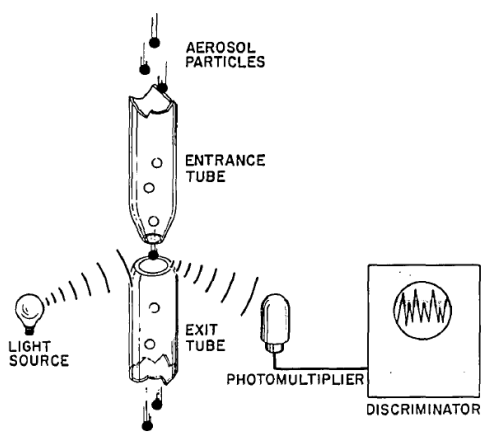

Fig. 2. Particle counter.

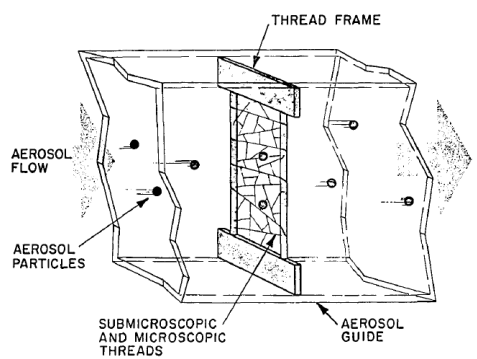

Fig. 4. Particle trap.

- Aerosols generated in the lab and transported via duct work to scattering stage
- Particle size distributions and densities of aerosols monitored continuously on the scattering stage with 90 degree scattering particle counter
- Particle size distributions and densities of aerosols measured periodically sing Dessens' spider thread particle trap method
- Nephelometer used to measure the energy at scattering angles from 12 to 146 degrees in 1 degree steps
- Cloud generation by mixing large masses of hot and cold saturated air. Aerosols were spherical water droplets. Laboratory produced clouds had densities ~10x greater than natural clouds.
- Dessens particle trap method is thought to be one of the best and most accuarte research tools for determining particle content.

David E. Setzer, "Comparison of Measured and Predicted Aerosol Scattering Functions," Applied Optics, Vol. 8, No. 3, 1969

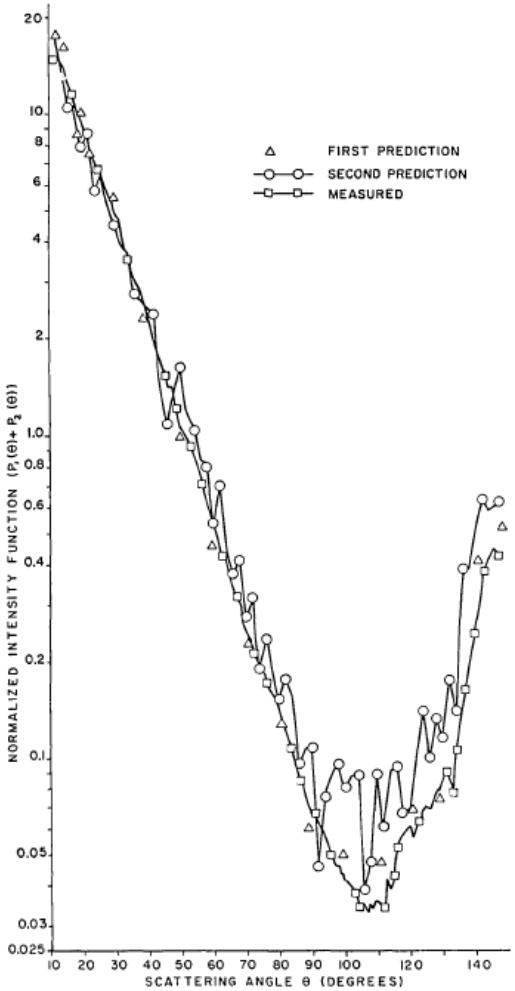

Fig. 7. Intensity vs scattering angle, aerosol no. 1, run no. 1.

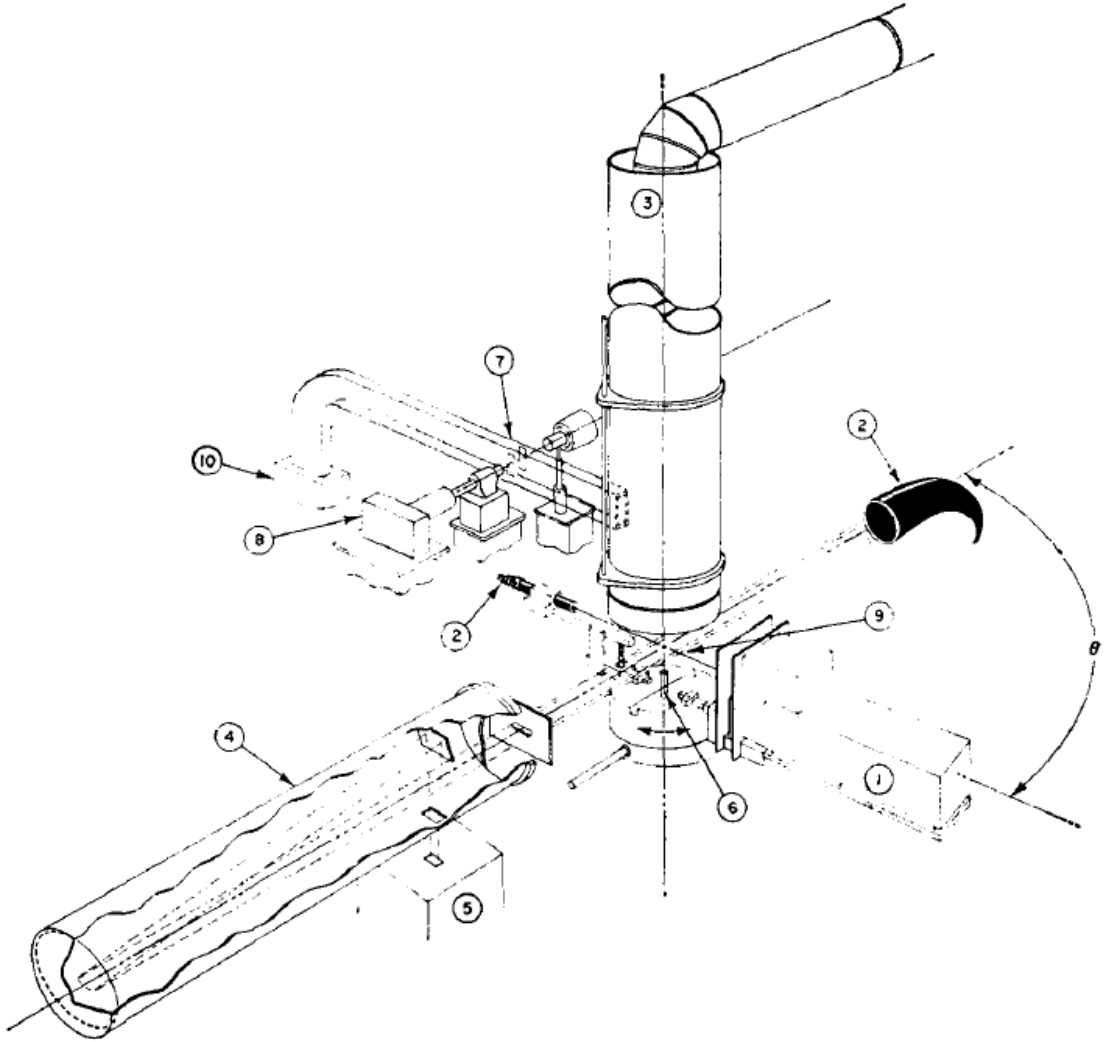

Fig. 6. Polar nephelometer: 1—laser; 2—light trap; 3—aerosol input; 4—collecting telescope; 5—photomultiplier; 6—counter intake tube; 7—Dessens trap; 8—photomicrographic setup; 9—scattering stage; 10—flow meter.

David E. Setzer, "Comparison of Measured and Predicted Aerosol Scattering Functions," Applied Optics, Vol. 8, No. 3, 1969

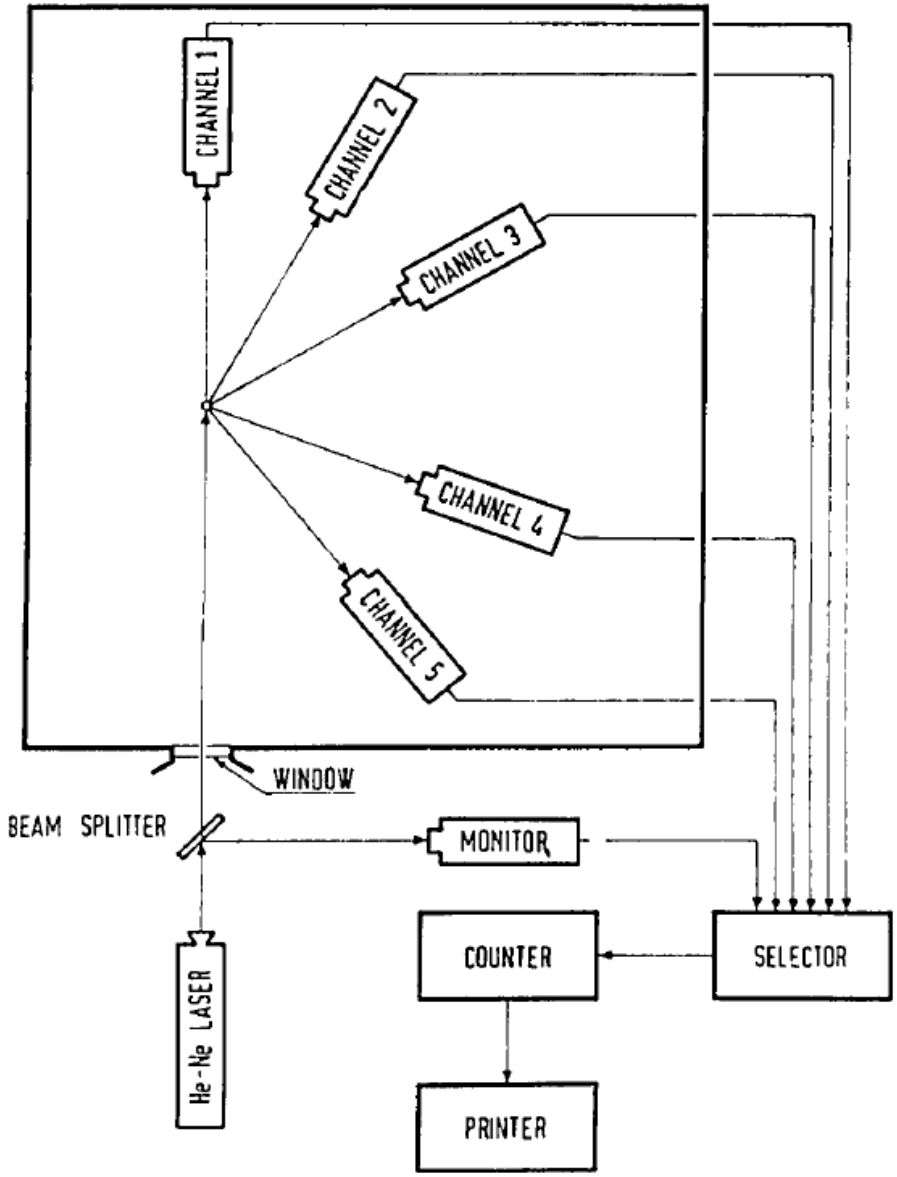

Fig. 1. Diagram of the experiment.

- 40 m^3 chamber, fog produced by evaporating water and cooling the floor. Can produce the complete evolution process of fog from formation to dissipation. Water vapor produced by a boiler located in the chamber, floor is cooled by closed loop circulation of refrigerated water.
- Used He-Ne with 0.6 mW, small window and walls of the chamber painted black to prevent reflections.
- Scattering volume 90 cm from input lens and defined by an iris in the image plane of the input lens.

R. Ferrara, G. Fiocco, and G. Tonna, "Evolution of the Fog Droplet Size Distribution Observed by Laser Scattering," Applied Optics, Vol. 9, No. 11, 1970.

Looking for Someone?

Recent Congressional action has caused cutbacks in certain areas of the National Aeronautics and Space Administration. As a result, a reduction of personnel is necessary at the Manned Spacecraft Center. A number of well qualified engineers (electrical, mechanical, civil, and aerospace), technicians (electronic and mechanical), and administrative (budget, procurement, and program planning) are available. They are part of the team which a little more than a year ago helped place the first man on the moon. Prospective employers who may have positions for these personnel should send vacancy information to Outplacement Committee, Code PBX, NASA Manned Spacecraft Center, Houston, Texas 77058.

This was on the back of the AO paper from 1970!

Other possible areas to look into . . .

Xu and Sadler, "Ultraviolet Communications: Potential and State-of-the-Art," Topics in Optical Communications, IEEE Communications Magazine, 2008.

Figure 5. *An example of NLOS UV communication system and network.*

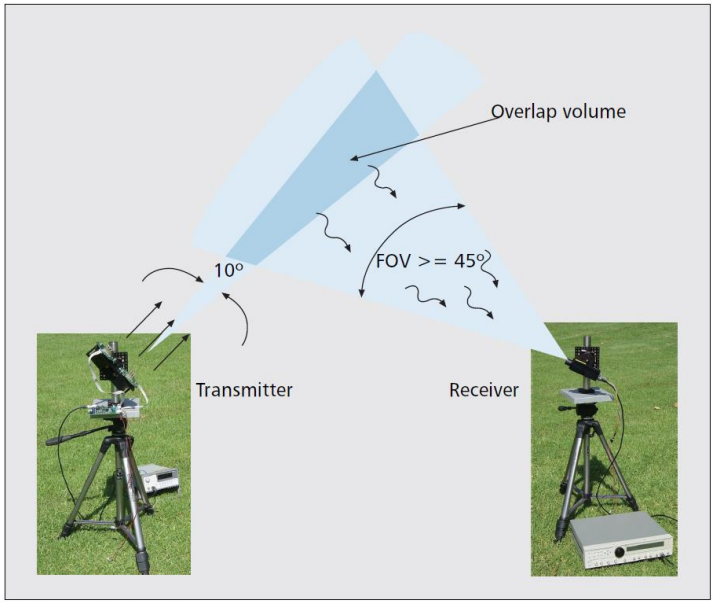

Figure 3. *UC-Riverside experimental test-bed.*

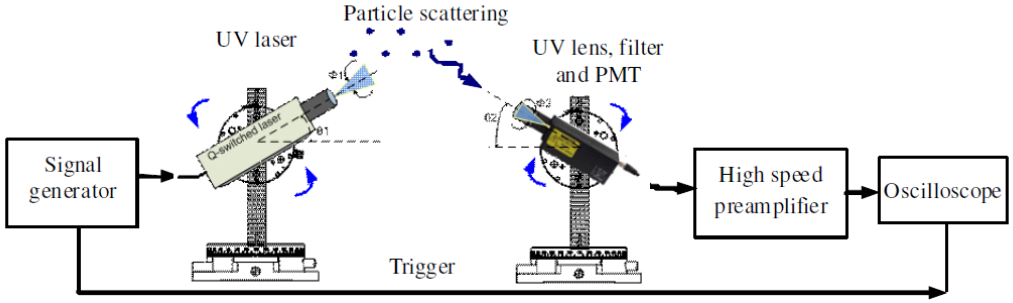

Fig. 2. NLOS UV channel impulse response measurement system.

Ding, Chen, Xu, Sadler, "Characterization and Modeling of Non-Line-of-Sight Ultraviolet Scattering Communication Channels," Communication Systems Networks and Digital Signal Processing (CSNDSP), 2010 7th International Symposium on

Back-up

Thoughts

- XXX

Nephelometer references from
http://www.esrl.noaa.gov/gmd/aero/instrumentation/neph_desc.html

References Anderson, T.L., Covert, D.S., Wheeler, J.D., Harris, J.M., Perry, K.D., Trost, B.E., Jaffe, D.J., and Ogren, J.A., " Aerosol backscatter fraction and single scattering albedo: Measured values and uncertainties at a coastal station in the Pacific Northwest," *J. Geophysical Research*, 104, 26793-26807, 1999.

Anderson, T.L., Covert, D.S., Marshalll, S.F., Laucks, M.L, Charlson, R.J., Waggoner, A.P., Ogren, J.A., Caldow, R., Holm, R.L., Quant, F.R., Sem, G.J., Wiedensohler, A., Ahlquist, N.A., and Bates, T.S., "Performance characteristics of a high-sensitivity, three-wavelength total scatter/backscatter nephelometer," *J. Atmospheric and Oceanic Technology*, 13, 967-986, 1996.

Anderson,T.L., and Ogren, J.A., "Deteriming aerosol radiative properties using the TSI 3563 Integrating Nephelometer," *Aerosol Science and Technology*, 29, 57-69, 1998.

Heintzenberg, J. and Charlson, R.J., "Design and applications of the integrating nephelometer: A review," *J. Atmospheric and Oceanic Technology*, 13, 987-1000, 1996.